FINAL

MITIGATED NEGATIVE DECLARATION AND SUPPORTING INITIAL STUDY

NRS-KRS 115 kV Transmission Line Project

September 2024

Lead Agency

Project Sponsor

Technical Assistance

FINAL

MITIGATED NEGATIVE DECLARATION AND SUPPORTING INITIAL STUDY

FOR

SILICON VALLEY POWER'S NRS-KRS 115 KV TRANSMISSION LINE PROJECT

LEAD AGENCY:

CITY OF SANTA CLARA
1500 WARBURTON AVENUE
SANTA CLARA, CA 95050

PROJECT SPONSOR:

SILICON VALLEY POWER
881 MARTIN AVENUE
SANTA CLARA, CA 95050

TECHNICAL ASSISTANCE:

ASPEN ENVIRONMENTAL GROUP
235 MONTGOMERY STREET, SUITE 640
SAN FRANCISCO, CA 94104

SEPTEMBER 2024

Contents

1. Mitigated Negative Declaration 1-1

1.1. Project Information 1-1
1.2. Introduction 1-1
1.3. Project Description 1-2
1.4. Environmental Determination 1-2
1.5. Mitigation Measures 1-2

2. Environmental Determination 2-1

2.1. Environmental Factors Potentially Affected 2-1
2.2. Environmental Determination 2-1

3. Introduction to the Initial Study 3-1

3.1. Proposed Project Overview 3-1
3.2. Environmental Process 3-1

3.2.1. CEQA Process 3-1
3.2.2. CEQA Lead Agency 3-1
3.2.3. Initial Study 3-1

4. Project Description 4-1

4.1. Project Title 4-1
4.2. Lead Agency Name and Address 4-1
4.3. Lead Agency Contact Person and Phone Number 4-1
4.4. Project Location 4-1
4.5. Project Sponsor's Name and Address 4-1
4.6. General Plan Designation 4-1
4.7. Zoning 4-2
4.8. Surrounding Land Uses and Setting 4-2
4.9. Project Overview 4-2

4.9.1. Overhead and Underground Options 4-2

4.10. Project Objectives 4-3
4.11. Project Components 4-3

4.11.1. 115 kV Transmission Line 4-3
4.11.2. Replacement of Existing Distribution and Telecommunication Lines 4-4
4.11.3. Substation Modifications 4-4

4.12. Project Construction Activities 4-8

4.12.1. Staging Areas 4-8
4.12.2. Work Areas 4-8
4.12.3. Construction Access 4-9
4.12.4. Overhead 115 kV Transmission Line Construction 4-10
4.12.5. Underground 115 kV Transmission Line Construction 4-12
4.12.6. Water Use 4-15
4.12.7. Construction Workforce and Equipment 4-16
4.12.8. Construction Traffic and Circulation 4-17

4.12.9. Vegetation Clearance 4-17
4.12.10. Erosion and Sediment Control and Pollution Prevention 4-17
4.12.11. Cleanup and Post Construction Restoration 4-18
4.12.12. Construction Schedule 4-18

4.13. Operations and Maintenance 4-18
4.14. Other Permits and Approvals 4-18
4.15. Electric and Magnetic Fields Summary 4-19

4.15.1. Electric and Magnetic Fields 4-19
4.15.2. EMF in the Proposed Project Area 4-20

4.16. Alternatives 4-22

5. Environmental Analysis 5-1

5.1. Aesthetics 5.1-1

5.1.1. Setting 5.1-1
5.1.2. Environmental Impacts and Mitigation Measures 5.1-9

5.2. Agriculture and Forestry Resources 5.2-1

5.2.1. Setting 5.2-1
5.2.2. Environmental Impacts and Mitigation Measures 5.2-2

5.3. Air Quality 5.3-1

5.3.1. Setting 5.3-1
5.3.2. Environmental Impacts and Mitigation Measures 5.3-3

5.4. Biological Resources 5.4-1

5.4.1. Setting 5.4-1
5.4.2. Environmental Impacts and Mitigation Measures 5.4-8

5.5. Cultural Resources 5.5-1

5.5.1. Setting 5.5-1
5.5.2. Environmental Impacts and Mitigation Measures 5.5-8

5.6. Energy 5.6-1

5.6.1. Setting 5.6-1
5.6.2. Environmental Impacts and Mitigation Measures 5.6-2

5.7. Geology and Soils 5.7-1

5.7.1. Setting 5.7-1
5.7.2. Environmental Impacts and Mitigation Measures 5.7-9

5.8. Greenhouse Gas Emissions 5.8-1

5.8.1. Setting 5.8-1
5.8.2. Environmental Impacts and Mitigation Measures 5.8-3

5.9. Hazards and Hazardous Materials 5.9-1

5.9.1. Setting 5.9-1
5.9.2. Environmental Impacts and Mitigation Measures 5.9-10

5.10. Hydrology and Water Quality 5.10-1

5.10.1. Setting 5.10-1
5.10.2. Environmental Impacts and Mitigation Measures 5.10-4

5.11. Land Use and Planning 5.11-1

5.11.1. Setting 5.11-1
5.11.2. Environmental Impacts and Mitigation Measures 5.11-2

5.12. Mineral Resources 5.12-1

5.12.1. Setting 5.12-1
5.12.2. Environmental Impacts and Mitigation Measures 5.12-2

5.13. Noise 5.13-1

5.13.1. Setting 5.13-1
5.13.2. Regulatory Background 5.13-2
5.13.3. Environmental Impacts and Mitigation Measures 5.13-3

5.14. Population and Housing 5.14-1

5.14.1. Setting 5.14-1
5.14.2. Environmental Impacts and Mitigation Measures 5.14-2

5.15. Public Services 5.15-1

5.15.1. Setting 5.15-1
5.15.2. Environmental Impacts and Mitigation Measures 5.15-3

5.16. Recreation 5.16-1

5.16.1. Setting 5.16-1
5.16.2. Environmental Impacts and Mitigation Measures 5.16-2

5.17. Transportation 5.17-1

5.17.1. Setting 5.17-1
5.17.2. Environmental Impacts and Mitigation Measures 5.17-4

5.18. Tribal Cultural Resources 5.18-1

5.18.1. Setting 5.18-1
5.18.2. Environmental Impacts and Mitigation Measures 5.18-4

5.19. Utilities and Service Systems 5.19-1

5.19.1. Setting 5.19-1
5.19.2. Environmental Impacts and Mitigation Measures 5.19-4

5.20. Wildfire 5.20-1

5.20.1. Setting 5.20-1
5.20.2. Environmental Impacts and Mitigation Measures 5.20-2

5.21. Corona and Induced Current Effects 5.21-1

5.21.1. Environmental Setting 5.21-1
5.21.2. Environmental Impacts and Assessment 5.21-1

5.22. Mandatory Findings of Significance 5.22-1

6. Mitigation Monitoring Plan 6-1

7. Response to Comments 7-1

7.1. Introduction to Comments and Responses Section 7-1
7.2. Summary of Comments Received 7-1
7.3. General Responses to Common Comments 7-3

7.3.1. General Response #1 – Human Health and Scope of CEQA 7-3
7.3.2. General Response #2 – EMF 7-4
7.3.3. General Response #3 – Corona and Induced Currents 7-7
7.3.4. General Response #4 – Property Values and Cost 7-7
7.3.5. General Response #5 – Aesthetics 7-7
7.3.6. General Response #6 – Noise 7-10
7.3.7. General Response #7 – Hazards 7-10

7.4. Responses to Comment Set A1 - California Department of Fish and Wildlife (CDFW) 7-10
7.5. Responses to Comment Set A2 - SFPUC Water Enterprise 7-16
7.6. Responses to Comment Set A3 - San Jose International Airport 7-16
7.7. Responses to Comment Set A4 - California Department of Transportation (Caltrans) 7-17
7.8. Responses to Comment Set B1 through B74 7-17

TABLES

Table 4-1. Summary of Approximate Pole Metrics 4-10
Table 4-2. Anticipated Personnel and Equipment Required for Project Construction (based on typical estimates) 4-16
Table 4-3. Permits that May Be Required for the Proposed Project 4-18
Table 5.1-1. Visual Impact Significance Criteria 5.1-10
Table 5.3-1. National and California Ambient Air Quality Standards 5.3-1
Table 5.3-2. Attainment Status for San Francisco Bay Area 5.3-2
Table 5.3-3. Maximum Daily Unmitigated Construction Emissions (lbs/day) 5.3-4
Table 5.5-1. Cultural Resources Reports Within Project Area 5.5-3
Table 5.6-1. Electricity Consumption for Load Served by SVP (million kWh per year) 5.6-1
Table 5.7-1. Significant Active and Potentially Active Faults within 50 miles of the Proposed Project 5.7-5
Table 5.9-1. Known Environmentally Contaminated Sites within 0.25-mile of the proposed Project 5.9-2
Table 5.13-1. Typical Noise Levels for Individual Construction Equipment 5.13-4
Table 5.14-1. Year 2017 Existing Conditions – Population, Housing, and Employment: City of Santa Clara and County of Santa Clara 5.14-1
Table 5.17-1. Existing Local Roadway Conditions 5.17-2
Table 5.19-1. Utility Providers 5.19-1
Table 5.19-2 Landfill Capacities 5.19-2
Table 6-1. Mitigation Monitoring Plan 6-2
Table 7-1. Comments Received on the Draft IS/MND 7-1

Figures

Figure 4-1. Project Overview 4-5
Figure 4-2. Typical Pole Types, 230 kV Riser Pole 4-6
Figure 4-3. Typical Pole Types, 230 kV Tangent and Deadend Poles 4-7
Figure 5.1-1. View Near NRS looking North 5.1-5
Figure 5.1-2. Wall Separating Residences and Lafayette Street 5.1-6
Figure 5.1-3. Bird's Eye Illustration of Project Poles on Lafayette Street 5.1-7
Figure 5.1-4. View from Bassett Street of Crossing at Montague Expressway 5.1-8
Figure 5.4-1. Vegetation and Land Cover 5.4-3
Figure 7-1. View of Lafayette Street from the east side of the intersection of Lafayette Street and Fairway Glen Drive, looking west 7-8
Figure 7-2. View of Lafayette Street from the east side of the intersection of Lafayette Street and Hope Drive, looking south 7-9
Figure 7-3. View of Lafayette Street from a motorist's perspective, adjacent to the Mission Gardens community, looking north 7-9

Appendices

Appendix A List of Preparers
Appendix B References
Appendix C Air Quality and Greenhouse Gas Emissions
Appendix D Draft Arborist Report
Appendix E Biological Resources
Appendix F Scoping Report
Appendix G EMF Report
Appendix H Public Comments on Draft IS/MND

List of Acronyms

ACE	Altamont Commuter Express
ADT	Average daily traffic
ANSI	American National Standards Institute
APLIC	Avian Power Line Interaction Committee
ARB	Air Resources Board
BAAQMD	Bay Area Air Quality Management District
BMPs	Best Management Practices
Cal/EPA	California Environmental Protection Agency
CAP	Climate Action Plan
CARB	California Air Resources Board
CBC	California Building Code
CCJPA	Capitol Corridor Joint Powers Authority
CCR	California Code of Regulations
CDFW	California Department of Fish and Wildlife
CDOC	California Department of Conservation
CEC	California Energy Commission
CEQA	California Environmental Quality Act
CERCLA	Comprehensive Environmental Response, Compensation, and Liability Act
CESA	California Endangered Species Act
CFGC	California Fish and Game Code
CFR	Code of Federal Regulations
CGS	California Geological Survey
CIWMB	California Integrated Waste Management Board
CLG	Certified Local Government
CNDDB	California Natural Diversity Data Base
CNEL	Community Noise Equivalent Level
CNPS	California Native Plant Society
CO	Carbon monoxide
CPRC	California Public Resources Code
CPUC	California Public Utilities Commission
CRHR	California Register of Historical Resources
CRRD	Community Risk Reduction Division
CUPA	Certified Unified Program Agencies
CVC	California Vehicle Code
CWA	Clean Water Act
DHS	Department of Health Services
DOC	Department of Conservation
DPM	Diesel particulate matter
DPR	Department of Pesticide Regulation
DTSC	Department of Toxic Substance Control
DVR	Donald Von Raesfeld Power Plant
EAP	Energy Action Plan
EIR	Environmental Impact Report
EMF	Electric and magnetic fields
EOC	Emergency Operations Center
EOP	Emergency Operations Plan
EPA	Environmental Protection Agency

FAA	Federal Aviation Administration
FAR	Federal Aviation Regulations
FEMA	Federal Emergency Management Agency
FESA	Federal Endangered Species Act
FHSZ	Fire Hazard Severity Zone
FMMP	Farmland Mapping and Monitoring Program
GHG	Greenhouse gas
GO	General Order
HFCs	Hydrofluorocarbons
HMBP	Hazardous Materials Business Plan
HMCD	Hazardous Materials Compliance Division
HWCL	Hazardous Waste Control Law
IARC	International Agency for Research on Cancer
IBC	International Building Code
ICC	International Code Council
IEEE	Institute of Electrical and Electronic Engineers
IRP	Integrated Resource Plan
ISA	International Society of Arboriculture
IWMB	Integrated Waste Management Board
KRS	Kifer Receiving Station
LOS	Level of service
LUST	Leaking underground storage tank
MBTA	Migratory Bird Treaty Act
MLD	Most likely descendant
MM	Mitigation measure
MMRP	Mitigation Monitoring and Reporting Program
MND	Mitigated Negative Declaration
MOU	Memorandum of understanding
MRDS	Mineral Resources Data Systems
MRR	Mandatory reporting rule
MRZ	Mineral resource zone
MSL	Mean sea level
NAHC	Native American Heritage Commission
NCCP	Natural Community Conservation Plan
NCP	National Contingency Plan
NESC	National Electric Safety Code
NESHAP	National Emission Standards for Hazardous Air Pollutants
NIMS	National Incident Management System
NPDES	National Pollutant Discharge and Elimination System
NPL	National Priorities List
NRHP	National Register of Historic Places
NRS	Northern Receiving Station
NSH	National Seismic Hazard
NWIC	California Historical Resources Information System, Northwest Information Center
NWI	USFWS National Wetlands Inventory
OEHHA	Office of Environmental Health Hazard Assessment
OHP	Office of Historic Preservation
OHWM	Ordinary High Water Mark
OMR	Office of Mine Reclamation

OSHA	Occupational Safety and Health Administration
PFCs	Perfluorocarbons
PM10	Particulate matter (less than 10 microns in diameter)
PM2.5	Fine particulate matter (less than 2.5 microns in diameter)
POU	Publicly owned utility
PRC	Public Resources Code
PRMP	Paleontological Resources Management Plan
PSHM	Probabilistic Seismic Hazard Map
RCRA	Resource Conservation and Recovery Act of 1976
RMP	Risk Management Plan
ROG	Reactive organic gases
ROW	Right-of-way
RPI	Rare plant inventory
RPS	Renewables Portfolio Standard
RWF	Regional Wastewater Facility
RWQCB	Regional Water Quality Control Board
SBWR	South Bay Water Recycling
SCCDEH	Santa Clara County Department of Environmental Health
SCFD	Santa Clara Fire Department
SCP	Scientific collecting permit
SCPD	Santa Clara Police Department
SCVWD	Santa Clara Valley Water District
SEMS	Standardized Emergency Management System
SGMP	Soil and Groundwater Management Plan
SMARA	Surface Mining and Reclamation Act of 1975
SMGB	State Mining and Geology Board
SRRE	Source Reduction Recycling Element
SVP	Silicon Valley Power
SWGS	Solid Waste Generation Study
SWPPP	Storm Water Pollution Prevention Plan
SWRCB	State Water Resources Control Board
TACs	Toxic air contaminants
TCRs	Tribal Cultural Resources
TMDL	Total Maximum Daily Load
TPZ	Tree Protection Zone
UPRR	Union Pacific Railroad
URMP	Urban Runoff Management Plan
USACE	U.S. Army Corps of Engineers
USFWS	U.S. Fish and Wildlife Service
USGS	U.S. Geological Survey
UST	Underground Storage tank
VHFHSZ	Very High Fire Hazard Severity Zones
VMT	Vehicle miles traveled
VOC	Volatile organic compounds
VTA	Valley Transportation Authority
WDRs	Waste Discharge Requirements
WEAP	Worker environmental awareness program
WHO	World Health Organization

FINAL

Mitigated Negative Declaration/Initial Study

for

Silicon Valley Power's NRS-KRS 115 kV Transmission Line Project

1. MITIGATED NEGATIVE DECLARATION

1.1. Project Information

Project:	NRS to KRS 115 kV Transmission Line Project City of Santa Clara, Santa Clara County, California
Project Sponsor:	City of Santa Clara, Silicon Valley Power 881 Martin Avenue Santa Clara, CA 95050 (408) 615-6600
General Plan:	NRS is located on land with the general plan designation of Regional Commercial, and the KRS is on land designated as Light Industrial
Zoning:	NRS and KRS are located on land zoned as Public or Quasi Public

1.2. Introduction

Pursuant to the California Environmental Quality Act (CEQA), the City of Santa Clara (City) must prepare an Initial Study (IS) for the Proposed Project to determine if any significant adverse effects on the environment would result from project implementation. The IS utilizes the significance criteria outlined in Appendix G of the CEQA *Guidelines*. If the IS for the project indicates that a significant adverse impact could occur, the City would be required to prepare an Environmental Impact Report.

According to Article 6 (Negative Declaration Process) and Section 15070 (Decision to Prepare a Negative Declaration or Mitigated Negative Declaration) of the CEQA Guidelines, a public agency shall prepare or have prepared a proposed negative declaration or mitigated negative declaration for a project subject to CEQA when:

(a) The initial study shows that there is no substantial evidence, in light of the whole record before the agency, that the project may have a significant effect on the environment, or

(b) The initial study identifies potentially significant effects, but:

(1) Revisions in the project plans or proposals made by, or agreed to by the applicant before a proposed mitigated negative declaration and initial study are released for public review would avoid the effects or mitigate the effects to a point where clearly no significant effects would occur, and

(2) There is no substantial evidence, in light of the whole record before the agency, that the project as revised may have a significant effect on the environment.

Based on the analysis in the Initial Study, it has been determined that all project-related environmental impacts could be reduced to a less than significant level with the incorporation of feasible mitigation

measures. Therefore, adoption of a Mitigated Negative Declaration (MND) will satisfy the requirements of CEQA. The mitigation measures included in this MND are designed to reduce or eliminate the potentially significant environmental impacts described in the Initial Study. Where a measure described in this document has been previously incorporated into the project, either as a specific project design feature or as an Applicant-Proposed Measure, this is noted in the discussion. Mitigation measures are structured in accordance with the criteria in Section 15370 of the CEQA *Guidelines*.

1.3. Project Description

Silicon Valley Power (SVP) proposes to construct the NRS to KRS 115 kV Transmission Line Project (Project), which would include constructing a new, 2.24 mile long overhead and/or underground 115 Kilovolt (kV) transmission line between two existing facilities, Northern Receiving Station (NRS) and Kifer Receiving Station (KRS), in the City of Santa Clara.

1.4. Environmental Determination

The Initial Study was prepared to identify the potential environmental effects resulting from the proposed Project's implementation, and to evaluate the level of significance of these effects. The Initial Study relies on information provided by SVP, Project site reconnaissance by SVP's consultant, Aspen Environmental Group, and information and documents cited in individual resource topic discussions.

Based on the Initial Study analysis, mitigation measures are identified for adoption to ensure that impacts of the proposed Project would be less than significant. SVP has agreed to implement all of the recommended mitigation measures as part of the proposed Project.

Implementation of the following mitigation measures would avoid potentially significant impacts identified in the Initial Study or reduce them to less than significant levels.

1.5. Mitigation Measures

Mitigation Measures for Construction-Phase Air Quality

MM AQ-1 **Implement Basic Construction Air Quality Mitigation**. The Project shall ensure that basic construction emissions control measures are implemented as "Best Management Practices," as follows:

- All exposed soil surfaces (e.g., parking areas, staging areas, soil piles, and graded areas) shall be watered as needed, up to two times per day.
- All haul trucks transporting soil, sand, or other loose material off-site shall be covered.
- All visible mud or dirt track-out onto adjacent public roads attributed to the Project shall be removed using wet power vacuum street sweepers at least once per day, if needed. The use of dry power sweeping is prohibited.
- All areas to be paved shall be completed as soon as possible. Foundation pads shall be laid as soon as possible after grading.
- Idling times shall be minimized either by shutting equipment off when not in use or reducing the maximum idling time to 5 minutes (as required by the California airborne toxics control measure Title 13, Section 2485 of California Code of Regulations [CCR]). Clear signage regarding idling shall be provided for construction workers at all access points.

- All construction equipment shall be maintained and properly tuned in accordance with manufacturer's specifications. All equipment shall be checked by a certified mechanic and determined to be running in proper condition prior to operation.
- Post a publicly visible sign with the telephone number and person to contact at SVP or its designee regarding dust complaints. This person shall respond and take corrective action within 48 hours. The BAAQMD's phone number shall also be visible to ensure compliance with applicable regulations.

Mitigation Measures for Special-Status Wildlife Species

MM BIO-1 **Implement Worker Environmental Awareness Program.** Prior to and for the duration of any vegetation removal and trimming and any ground disturbing activities, SVP or its designee shall provide Worker Environmental Awareness Program (WEAP) training to all new personnel prior to beginning work on the Project. The training may be presented in the form of a video. The training program shall be developed by a qualified biologist to educate Project personnel about the Project's sensitive biological resources. The name and credentials of the qualified biologist shall be submitted to the City no less than 14 days prior to the surveys for review and approval. A draft of the training program (i.e., video and written materials) shall be submitted to the City no less than 14 days prior for approval prior to implementation. The WEAP shall include, at a minimum:

- An overview of the sensitive biological resources that are known or have the potential to occur in the Project area and surrounding habitat. This shall include nesting birds and special- plants and wildlife.
- An overview of the Project and Mitigation Monitoring and Reporting Program (MMRP), and the consequences of non-compliance with these requirements.
- An overview of the federal and State Endangered Species Acts, Migratory Bird Treaty Act, Bald and Golden Eagle Protection Act, pertinent Fish and Game Code sections, and other applicable regulatory requirements and the consequences of non-compliance with these requirements.
- Functions, responsibilities, and authority of the biological monitor(s) and how they interact with Project personnel.
- Identify clear points of contact for the biological monitor(s) and construction personnel including who to contact should workers have questions regarding compliance with environmental documents and permit conditions.
- Project restrictions, such as Environmentally Sensitive Habitat Areas (ESHAs), setbacks from sensitive biological resources, and avoidance buffers.
- Requirements to remain within authorized work areas and on approved access routes, with examples of flagging and signage used to designate these areas.
- Information on compliance with Project speed limits, control of litter and micro trash, smoking restrictions, wildfire minimization measures, spill containment and clean up, and the implementation of Best Management Practices.
- Explanation that wildlife must not be harmed or harassed including procedures for abiding by Project speed limits, covering pipes, securing excavations, and installing exit ramps to prevent wildlife entrapment.

Training acknowledgement forms shall be signed by each person attesting that they understand and will abide by Project requirements. Upon request, SVP or its designee

shall provide the City the WEAP training acknowledgement forms for persons who have completed the training in the prior month and a running total of all persons who have completed the training to date.

MM BIO-2 **Biological Monitoring.** SVP or its designee shall retain a qualified biologist as biological monitor on the Project, to be approved by the City. If sensitive biological resources are identified during preconstruction surveys or incidentally, the qualified biologist will monitor Project work locations in proximity to sensitive biological resources weekly until biological resources are not found for one consecutive month, at which point weekly monitoring will cease. The qualified biologist shall be notified immediately if any nesting birds or other biological resources are discovered once construction begins. The qualified biologist will be the point of contact for any employee or contractor who might inadvertently kill or injure a special-status species or anyone who finds a dead, injured, or entrapped animal. The qualified biologist or biological monitor shall have the authority and responsibility to halt any Project activities that are not in compliance with applicable mitigation measures, permit conditions, or other Project requirements, or will have an unauthorized adverse effect on biological resources.

MM BIO-3 **Conduct Preconstruction Surveys for Special-Status Wildlife and Implement Avoidance Measures.** A qualified biologist shall conduct a preconstruction survey for each of the species identified below. These surveys can be combined if they meet the requirements outlined in this measure. The name and credentials of the qualified biologist shall be submitted to the City no less than 14 days prior to the surveys for review and approval. Within 14 days of completion of the surveys, the City shall be provided with a report describing the findings, including the date, time, and duration of the surveys; identity of the surveyor(s); a list of all common and special-status species observed; locations of any special-status species identified, including any established avoidance buffers; and any actions taken at the direction of the City in coordination with CDFW, and/or USFWS.

Bumble Bee: A preconstruction survey for Crotch's bumble bee and western bumble bee shall be conducted during the colony active period for each species (April through August) prior to project vegetation management and ground disturbing activities. The survey shall be conducted by a qualified entomologist or biologist familiar with the life history and ecology of special-status bumble bee species. The preconstruction survey for special-status bumble bees shall focus on the ruderal habitat within the utility right-of-way adjacent to the Northern Receiving Station and landscaped and ruderal land at the Montague Expressway interchange. The survey shall identify any potential foraging, nesting, and/or overwintering resources present within the Project work areas and a 50-foot buffer where legal access is available. If a potential active special-status bumble bee nest site is identified, a 50-foot avoidance buffer shall be clearly delineated with staking, flagging, and/or signage and Project activities will be prohibited from the area until it is determined that the nest is no longer potentially active. The qualified biologist shall notify the City for coordination with CDFW within 24 hours as further coordination may be required to avoid or mitigate impacts.

Burrowing Owl: No later than seven days prior to start of project vegetation management and ground disturbing activities, a qualified biologist shall conduct a preconstruction survey for burrowing owl. The survey shall include the focus areas (described below) plus a 250-foot buffer where legal access is available. The survey for burrowing owl shall focus on the ruderal habitat described for bumble bees above. If burrows or other structures are identified that contain signs of use by burrowing owl, or if burrowing owl(s) is observed, an avoidance buffer area shall be clearly delineated with staking, flagging, and/or signage.

If during the nesting season (February 1 to August 31), a 250-foot avoidance buffer shall be established, and Project activities will be prohibited from the area until a qualified biologist determines it is occupied either by a non-mated pair or the young have fledged. If outside the nesting season, a 160-foot avoidance buffer shall be established. The prescribed buffers may be adjusted by the qualified avian biologist in coordination with the City and CDFW based on existing conditions around the burrow, planned construction activities, tolerance of the species at a given location, and other pertinent factors.

If avoidance of burrowing owls is not feasible and work will be conducted outside the nesting season, a Burrowing Owl Passive Relocation Plan shall be developed to provide detailed methods and guidance for passive relocation of burrowing owls. The Burrowing Owl Passive Relocation Plan shall be submitted to the City for approval in coordination with CDFW prior to conducting passive relocation. An occupied burrow may not be disturbed during the nesting season, unless a qualified biologist determines, by non-invasive methods, that it is not occupied by a mated pair. Passive relocation would include installation of one-way doors on burrow entrances that would let owls out of the burrow but would not let them back in. Once owls have been passively relocated, burrows will be carefully excavated by hand and collapsed by, or under the direct supervision, of a qualified biologist.

Within 14 days of completion of the surveys, the City shall be provided with a report describing the findings, including the date, time, and duration of the surveys; identity of the surveyor(s); any established avoidance buffers in the event burrowing owls are documented to be present; and any actions taken at the direction of the City and/or CDFW.

Western Pond Turtle: No later than seven days prior to start of project vegetation management and ground disturbing activities, a qualified biologist shall conduct a preconstruction survey for western pond turtle. The survey for western pond turtle shall focus on the ruderal habitat within the utility right-of-way southeast adjacent to the Northern Receiving Station.

Western pond turtle or other special-status wildlife found within the Project site during the surveys shall be allowed to leave on its own volition prior to the onset of construction. If species of special concern are found within the Project site during surveys and will not leave on its own volition, the species will be relocated to the nearest suitable habitat outside of the Project site. Species of special concern will only be handled by qualified personnel as authorized by CDFW and/or USFWS under an issued state scientific collecting permit (SCP), memorandum of understanding (MOU), or federal recovery permit. Impacts to federally or state-listed species or state-listing candidate species are not authorized. If any State or federally listed, candidate, or proposed species are detected work will be stopped and the applicant shall notify the City for coordination with CDFW and or USFWS, within 24-hours for further direction.

MM BIO-4 **Preconstruction Nesting Bird Surveys and Nest Protection.** During the nesting season (February 1 to August 31), preconstruction nesting bird surveys shall be conducted on the site and vicinity by a qualified biologist no more than 7 days before any work activities, including any vegetation removal or trimming, are performed at a given Project location. The surveys shall be conducted following the sequential schedule of the linear Project in a manner that minimizes potential for the surveys to expire before the construction crews proceed to a new Project work location. Surveyors will search for all potential nest types (e.g., ground, cavity, shrub/tree, structural, etc.) and determine whether the nest is active. A nest will be determined to be active if eggs or young are present in the nest. Upon discovery of active nests, the biological monitor will determine if there is need for

a buffer or shield to minimize disturbance of the nest. Upon this determination and execution of any required minimization action, work may proceed. The extent of the determination will be based upon: acclimation of the species or individual to disturbance, nest type (cavity, tree, ground, etc.), and level and duration of construction activity. If there is a break in construction at a work location for a period of 14 or more days during nesting season, a new nesting bird survey shall be undertaken before construction is allowed to commence at that location to determine if any nests have been established. Bird surveys are not required outside of the nesting season.

In the unlikely event a special-status or listed species is found nesting nearby, CDFW and USFWS will be notified, and the City will be provided with nest survey results, if requested. When active nests are identified, monitoring for significant disturbance to the birds will be implemented. Construction will not be allowed to continue unless the qualified biologist determines that no disturbance is occurring.

MM BIO-5 **Preconstruction Bat Survey and Implement Avoidance Measures.** A qualified biologist shall conduct surveys for special-status bats during the appropriate time of day to maximize detectability to determine if bat species are roosting in trees or other vegetation requiring removal or clearance pruning for the Project. The name and credentials of the qualified biologist shall be submitted to the City no less than 14 days prior to the surveys for review and approval. The survey shall occur no less than 7 days and no more than 14 days prior to beginning tree or other vegetation removal or trimming activities. Survey methodology may include visual surveys for bats (e.g., observation of bats emerging from roosts to forage), inspection for suitable roost habitat, bat sign (e.g, guano), or use of ultrasonic detectors (e.g., Anabat, etc). Visual surveys shall include all trees or other vegetation requiring removal or clearance pruning for the Project.

If evidence of bat use is observed, the approximate number and species of bats using the roost shall be determined. Bat detectors may be used to supplement survey efforts.

If roosts or a maternity colony are determined to be present, then a Bat Mitigation and Monitoring Plan (Plan) shall be prepared and implemented to mitigate for the loss of roosting habitat. The Plan shall include information pertaining to the species of bat and location of the roost, exclusion methods and roost removal procedures, compensatory mitigation for permanent impacts (including specific mitigation ratios and location of proposed mitigation) and monitoring to assess bat use of mitigation areas. This Plan shall be submitted to the City and CDFW for review and approval prior to project activities that could disturb roosting bats.

Mitigation Measures to Comply with Local Tree Policies and Ordinances

MM BIO 6: **Tree Protection Measures for Retained Trees.** To minimize the potential damage and ensure the long-term health, stability, and survival of retained trees, measures outlined in the Tree Protection Plan below shall be implemented.

<u>Tree Protection Zone</u>

- A Tree Protection Zone (TPZ) shall be defined by the City Arborist or City designated ISA (International Society of Arboriculture) Certified Arborist for all trees within 50 feet of any excavations that could be affected by project activities and are intended for preservation. A TPZ will not be established for trees within the Project area that are not within this excavation zone. TPZ will be taken down once excavation work is completed within 50 feet. A TPZ will typically include all area within the dripline of trees to be retained.

- The TPZ will be protected by a fenced enclosure to prevent unauthorized access during project activities. Fencing shall be constructed of sturdy but open material (i.e., orange webbed construction fencing, chain-link) with a minimum height of 4 feet and secured in place. Warning signs (e.g. WARNING – Tree Protection Zone – This fence shall not be moved without approval by the City Arborist or a City designated arborist) shall be prominently displayed and visible from all sides of the TPZ fencing.
- TPZ fencing shall be installed prior to any demolition, grading, staging, stockpiling, or any other construction activities, and shall remain in place until all construction activities are complete.
- No construction, staging, or storage of materials, equipment or vehicles shall occur within the TPZ without advanced approval and oversight by the City Arborist or a City designated ISA Certified Arborist.
- No excess soil, excess concrete or concrete wash, chemicals, refuse or other waste shall be placed within the TPZ.
- The primary contractor shall be responsible for maintaining TPZ fencing and enforcing all TPZ guidelines outlined above throughout the course of the Project.

Site Grading, Excavation, and Trenching

- Soil disturbance or grade changes within a TPZ are not permitted unless approved by the City Arborist or a City designated arborist. Any approved grading, excavation or trench work within a TPZ will be field staked and inspected by the City Arborist or a City designated ISA Certified Arborist prior to implementation.
- All grading, excavation and trenching work within a TPZ shall be performed under the observation of a City Arborist or City designated ISA Certified Arborist.
- All grading shall be designed to provide positive drainage away from the base of trees to be preserved and shall not create ponding within a TPZ.
- Grade changes in the vicinity of trees to be preserved should remain as close to natural grade as possible.

Canopy Pruning

- To the extent possible, any necessary canopy pruning shall be completed prior to the commencement of construction activities.
- Pruning shall be performed by a qualified tree service worker under the direction of a ISA Certified Arborist following International Society of Arboriculture tree pruning best management practices. Pruning shall not be performed by construction personnel.

Root Pruning

- Any roots one inch and larger requiring removal shall be cut cleanly in sound tissue. No pruning seals or paint shall be used on wounds.
- Roots two inches and greater shall remain in place and undamaged to the extent practicable. If removal is required, cuts shall be made with the approval and under the direction of an ISA Certified Arborist.

Communication for Tree Protection Compliance

- A preconstruction meeting shall be arranged for the City Arborist or City designated ISA Certified Arborist to meet with the Project Planner, Project Contractors, Onsite Project

Supervisors, Tree Pruning and Removal Contractor, and/or other appropriate Project Leads to review and secure a commitment to comply with all tree protection measures.

Mitigation for Previously Unidentified Archaeological Resources

MM CR-1 **Worker Training and Management of Unanticipated Discoveries of Historical Resources, Unique Archaeological Resources**. SVP shall conduct a worker environmental awareness program (WEAP) for Project personnel who might encounter or alter historical resources or important/unique archaeological materials during Project work. This program may be combined with any similar required program, such as for biological resources. The WEAP will include a kickoff tailgate session that describes how to identify cultural resources and what to do if an unanticipated discovery is made during construction, presents site avoidance requirements and procedures to be followed if unanticipated cultural resources are discovered during Project construction, and includes a discussion of disciplinary and other actions that could be taken against persons violating historic preservation laws and SVP policies.

If previously unidentified cultural resources are identified during construction, construction work within 50 feet of the find shall be halted and directed away from the discovery until a Secretary of the Interior qualified archaeologist assesses the significance of the resource. The archaeologist, in consultation with the City, any interested Tribes, and any other responsible public agency, shall make the necessary plans for treatment of the find(s) and for the evaluation and mitigation of impacts if the finds are found to be eligible to the California Register, qualify as a unique archaeological resource under California Environmental Quality Act Section 21083.2, or are determined to be tribal cultural resource as defined in Section 21074.

Mitigation for Treatment of Human Remains

MM CR 2 **Treatment of Human Remains**. Any human remains discovered are to be treated with respect and dignity. Upon discovery of human remains, all work within 50 feet of the discovery area must cease immediately, nothing is to be disturbed, and the area must be secured. The Santa Clara County Coroner's Office must be called. The Coroner has two working days to examine the remains after notification. The appropriate land manager of the site is to be called and informed of the discovery. It is very important that the suspected remains, and the area around them, are undisturbed and the proper authorities called to the scene as soon as possible, as it could be a crime scene. The Coroner will determine if the remains are archaeological/historic or of modern origin and if there are any criminal or jurisdictional questions.

After the Coroner has determined the remains are archaeological/historic-era, the Coroner will make recommendations concerning the treatment and disposition of the remains to the person responsible for the excavation, or to his or her authorized representative. If the Coroner believes the remains to be those of a Native American, he/she shall contact the Native American Heritage Commission (NAHC) by telephone within 24 hours.

The NAHC will immediately notify the person it believes to be the most likely descendant (MLD) of the remains. The MLD has 48 hours to make recommendations to the landowner for treatment or disposition of the human remains. If the descendant does not make recommendations within 48 hours, the landowner shall reinter the remains in an area of the property secure from further disturbance. If the landowner does not accept the descendant's recommendations, the owner or the descendant may request mediation by NAHC.

According to the California Health and Safety Code, six (6) or more human burials at one (1) location constitute a cemetery (Section 8100), and willful disturbance of human remains is a felony (Section 7052).

Mitigation Measure for Seismically Induced Liquefaction

MM G-1 **Conduct Geotechnical Investigations.** Because seismically induced liquefaction-related ground failure has the potential to damage or destroy Project components, SVP shall cause design-level geotechnical investigation for the Project to be performed that shall include investigations designed to assess the potential for geologic and seismic hazards, and specifically include evaluation of the potential for liquefaction and expansive soils to affect the 115 kV line structures. Where liquefaction or expansive soils hazards are found to exist/verified, appropriate engineering design and construction measures shall be incorporated into the Project design as deemed appropriate by the Project engineer. Finalized Project design incorporating geotechnical recommendations shall be submitted to the City 60 days prior to Project construction.

Mitigation Measure for Paleontological Resources

MM G-2 **Worker Training and Management of Paleontological Resources.** A paleontologist must be retained who meets the professional paleontologist qualifications (Society of Vertebrate Paleontology's Standard Procedures, 2010) and has demonstrated experience in carrying paleontological projects to completion. The qualified professional paleontologist shall prepare a Worker Environmental Awareness Program (WEAP) for potentially encountered paleontological resources, and training shall be provided for all staff who will be onsite during excavations. The WEAP shall show what local Pleistocene fossils look like in general, where they may appear in the Project, and how to proceed should material suspected to be a fossil is encountered.

The WEAP shall include procedures to follow if paleontological resources are encountered, including:

- A monitoring plan for soils generated from tubular pole foundation excavations that may encounter Pleistocene sediments. Workers may temporarily halt operations to allow for identification and collection of paleontological resources from soil spoil piles. If a potential significant paleontological resource is noted, a qualified paleontologist or paleontological monitor shall be called to the site identify and collect the fossil.
- A plan for treatment of significant fossils that provides for the treatment of specimens to the point of identification and permanent preservation, including washing of sediments to recover small invertebrates and vertebrates.
- A specimen identification, analysis, and curation plan that includes identification to the lowest taxonomic level possible; taxonomic, taphonomic, and biostratigraphic analysis; and curation to the standards of the repository where they will be curated.
- Paleontological resource collection treatment, and identification shall meet standards set forth in the Society of Vertebrate Paleontology (2010).

Mitigation Measure for Transport, Use, or Disposal of Hazardous Materials

MM H-1 **Hazardous Substance Control and Emergency Response.** SVP shall implement its hazardous substance control and emergency response. procedures as needed. These procedures identify methods and techniques to minimize the exposure of the public and site workers to potentially hazardous materials during all phases of Project construction through

operation. They address worker training appropriate to the site worker's role in hazardous substance control and emergency response. The procedures also require implementing appropriate control methods and approved containment and spill-control practices for construction and materials stored on site. If it is necessary to store chemicals on site, they shall be managed in accordance with all applicable regulations. Material safety data sheets shall be maintained and kept available on site, as applicable.

All hazardous materials and hazardous wastes shall be handled, stored, and disposed of in accordance with all applicable regulations, by personnel qualified to handle hazardous materials. The hazardous substance control and emergency response procedures include, but are not limited to, the following:

- Proper disposal of potentially contaminated soils resulting from leaks or spills.
- Establishing site-specific buffers for construction vehicles and equipment located near sensitive resources.
- Emergency response and reporting procedures to address hazardous material spills.
- Stopping work at that location and contacting the City Fire Department Hazardous Materials Division immediately if visual contamination or chemical odors are detected. Work will be resumed at this location after any necessary consultation and approval by the Hazardous Materials Division.

SVP shall complete its Emergency Action Plan Form as part of Project tailboard meetings. The purpose of the form is to gather emergency contact numbers, identify first aid locations and provide other tailboard safety information.

Mitigation Measure for Contaminated Soil and Groundwater

MM H-2 **Soil and Groundwater Management.** Prior to Project construction and ground disturbing activities, SVP shall implement an evaluation of potential soil and groundwater contamination at locations along the Project route where excavation, drilling, auguring, or other significant ground disturbance will occur to prevent mobilization of contaminants and exposure of workers and the public. The evaluation shall be completed at least 60 days prior to the start of Project construction. The evaluation of soil and groundwater shall include, but not be limited to, the following:

- If contaminants below regulatory screening levels are identified, SVP shall coordinate with SCCDEH regarding soil reuse guidelines;
- If contaminants exceeding applicable regulatory screening levels for construction workers and residential users published by the RWQCB, DTSC, or the Environmental Protection Agency (EPA) (except for arsenic which is naturally occurring in the area), are encountered during the Soil and Groundwater Characterization Study SVP shall obtain regulatory oversight from SCCDEH and shall prepare a Soil and Groundwater Management Plan (SGMP); and
- Soils found in concentrations above established thresholds (except for arsenic) shall be removed and disposed of according to California Hazardous Waste Regulations.

If a SGMP is needed, the SGMP shall be prepared to guide activities during excavation and other ground disturbing activities to ensure that identified contaminated soils or groundwater are handled, removed, and disposed of properly. The SGMP shall be prepared by a

licensed qualified professional and submitted to SCCDEH at least 30 days prior to Project construction and shall include, but not be limited to, the following elements:

- Procedures and protocols for the safe handling, storage, stockpiling, and disposal of contaminated soils;
- Contaminated soil excavated from the site shall be hauled off-site and disposed of at a licensed hazardous materials disposal site;
- Protocols to manage and dispose of contaminated groundwater that may be encountered during trenching or subsurface excavation activities, and if dewatering is required; and
- Procedures and protocols to follow in the event soils or groundwater not previously identified as contaminated and suspected of being contaminated (on the basis of visual, olfactory, or other evidence) are identified during site grading or excavation activities or dewatering activities to allow for proper identification and characterization, and subsequent proper handling, removal, and disposal.

Mitigation Measure for Water Quality

MM HYD-1 **SWPPP or Erosion Control Plan Development and Implementation.** Following Project approval, SVP will prepare and implement a SWPPP, if required by State law, or erosion control plan to minimize construction impacts on surface water and groundwater quality. Implementation of the SWPPP or erosion control plan will help stabilize graded or disturbed areas and reduce erosion and sedimentation. The plan will designate Best Management Practices (BMPs) that will be adhered to during construction activities. Erosion and sediment control measures, such as straw wattles, covers, and silt fences, may be installed before the onset of winter rains or any anticipated storm events if soils are not stabilized. Suitable stabilization measures will be used to protect exposed areas during construction activities, as necessary. During construction activities measures will be in place to prevent contaminant discharge.

The Project SWPPP or erosion control plan will include erosion control and sediment transport BMPs to be used during construction. BMPs, where applicable, will be designed by using specific criteria from recognized BMP design guidance manuals. Erosion-minimizing efforts may include measures such as properly containing stockpiled soils.

Erosion control measures identified will be installed in an area before construction begins during the wet season and before the onset of winter rains or any anticipated storm events. Temporary measures such as silt fences or wattles, intended to minimize sediment transport from temporarily disturbed areas, will remain in place until disturbed areas have stabilized. The plan will be updated during construction as required by the SWRCB.

A worker education program shall be established for all field personnel prior to initiating fieldwork to provide training in the appropriate application and construction of erosion and sediment control measures contained in the SWPPP. This education program will also discuss appropriate hazardous materials management and spill response. Compliance with these requirements will be ensured by the on-site construction contractor.

Mitigation Measure for Construction Traffic

MM T-1 **Construction Traffic Control Plan.** Prior to the start of construction, SVP or its designee shall prepare and submit an Encroachment Permit which will include the construction Traffic Control Plan for review and approval to the City's Department of Public Works for

public roads and transportation facilities that would be directly affected by the construction activities and/or would require permits and approvals. SVP shall submit the construction Traffic Control Plan to the City prior to conducting activities covered in the traffic control permits. The construction Traffic Control Plan shall include, but not be limited to:

- The locations and use of flaggers, warning signs, lights, barricades, delineators, cones, arrow boards, etc., according to standard guidelines outlined in the Manual on Uniform Traffic Control Devices, the Standard Specifications for Public Works Construction, and/or the California Joint Utility Traffic Control Manual.
- Additional methods to reduce temporary traffic delays and trips during peak travel hours to the extent feasible.
- Typical access routes between all staging areas and the proposed work areas.
- Defining methods to coordinate with the City throughout construction to minimize cumulative lane disruption impacts should simultaneous construction projects affect shared segments/portions of the circulation system.
- Prior to the start of construction, provide (or identify the timing to provide) the City with methods to comply with all specified requirements.
- Plans to coordinate in advance with emergency service providers to avoid restricting the movements of emergency vehicles. Police departments and fire departments shall be notified in advance by SVP of the proposed locations, nature, timing, and duration of any roadway disruptions, and shall be advised of any access restrictions that could impact their effectiveness. At locations where roads will be blocked, provisions shall be ready at all times to accommodate emergency vehicles, such as immediately stopping work for emergency vehicle passage, providing short detours, and developing alternate routes in conjunction with the public agencies. Documentation of the coordination with police and fire departments shall be gathered prior to the start of construction.
- Plans to coordinate in advance with property owners, if any, that may have limited access to properties due to temporary lane closures. Provisions for ensuring secondary access should be provided.
- Plans to coordinate with Valley Transportation Authority in advance of construction to minimize disruption to mass transit.

Mitigation for Unanticipated Tribal Cultural Resources

MM TCR-1 **Management of Unanticipated Tribal Cultural Resources.** During project construction, should subsurface tribal cultural resources be discovered, all activity in the vicinity of the find shall stop and a qualified archaeologist and an authorized tribal representative shall be contacted to assess the significance of the find according to CEQA Guidelines Section 15064.5 and Section 21074. If any find is determined to be significant, the archaeologist shall determine, in consultation with the implementing agency and any local Native American groups expressing interest, appropriate avoidance measures or other appropriate mitigation. Per CEQA Guidelines Section 15126.4(b)(3), preservation in place shall be the preferred means to avoid impacts to tribal cultural resources. Methods of avoidance may include, but shall not be limited to, Project reroute or redesign, or identification of protection measures such as capping or fencing. Consistent with CEQA Guidelines Section 15126.4(b)(3)(C), if it is demonstrated that resources cannot be avoided, the qualified archaeologist shall develop additional treatment measures, such as data recovery or

other appropriate measures, in consultation with the implementing agency and any local Native American representatives expressing interest in the tribal cultural resource.

A Mitigation Monitoring and Reporting Program (MMRP) has been prepared to ensure that mitigation measures are properly implemented (see Section 6). The MMRP describes specific actions required to implement each measure, including information on timing of implementation and monitoring requirements.

Based on the analysis and conclusions of the Initial Study, the impacts of the Project as proposed by SVP would be mitigated to less than significant levels with the implementation of the mitigation measures presented herein, which have been incorporated into the proposed Project.

2. ENVIRONMENTAL DETERMINATION

2.1. Environmental Factors Potentially Affected

The environmental factors checked below would be potentially affected by this project, involving at least one impact that is a "Potentially Significant Impact" and requiring implementation of mitigation as indicated by the checklist on the following pages.

☐ Aesthetics	☐ Agriculture & Forestry Resources	☒ Air Quality
☒ Biological Resources	☒ Cultural Resources	☐ Energy
☒ Geology/Soils	☐ Greenhouse Gas Emissions	☒ Hazards & Hazardous Materials
☒ Hydrology/Water Quality	☐ Land Use/Planning	☐ Mineral Resources
☐ Noise	☐ Population/Housing	☐ Public Services
☐ Recreation	☒ Transportation	☒ Tribal Cultural Resources
☐ Utilities/Service Systems	☐ Wildfire	☐ Mandatory Findings of Significance

2.2. Environmental Determination

On the basis of this initial evaluation:

☐ I find that the Proposed Project COULD NOT have a significant effect on the environment, and a **NEGATIVE DECLARATION** will be prepared.

☒ I find that although the Proposed Project could have a significant effect on the environment, there will not be a significant effect in this case because revisions in the project have been made by or agreed to by the project proponent. A **MITIGATED NEGATIVE DECLARATION** will be prepared.

☐ I find that the Proposed Project MAY have a significant effect on the environment, and an **ENVIRONMENTAL IMPACT REPORT** is required.

☐ I find that the Proposed Project MAY have a "potentially significant impact" or "potentially significant unless mitigated" impact on the environment, but at least one effect 1) has been adequately analyzed in an earlier document pursuant to applicable legal standards, and 2) has been addressed by mitigation measures based on the earlier analysis as described on attached sheets. An **ENVIRONMENTAL IMPACT REPORT** is required, but it must analyze only the effects that remain to be addressed.

☐ I find that although the Proposed Project could have a significant effect on the environment, because all potentially significant effects (a) have been analyzed adequately in an earlier EIR or NEGATIVE DECLARATION pursuant to applicable standards, and (b) have been avoided or mitigated pursuant to that earlier EIR or NEGATIVE DECLARATION, including revisions or mitigation measures that are imposed upon the Proposed Project, nothing further is required.

Allie Jackman, Project Manager
Principal Electric Utility Engineer
Silicon Valley Power/City of Santa Clara

09/24/2024
Date

3. INTRODUCTION TO THE INITIAL STUDY

3.1. Proposed Project Overview

Silicon Valley Power (SVP) is proposing to construct approximately 2.24 miles of new 115 kilovolt (kV) transmission line within the northeastern area of the City. SVP's primary objective of the new 115 kV transmission line (Proposed Project) is to connect the Northern Receiving Station (NRS) and Kifer Receiving Station (KRS). By connecting these two receiving stations, it will allow energy to be balanced and redistributed within SVP's transmission receiving stations and allow SVP to serve new load growth projected based on the SVP Resource Load Forecast.

The SVP evaluation team identified and evaluated three routes for the new 115 kV transmission line prior to selection of the final route. The preferred alignment begins at NRS exiting northeast toward Lafayette Street continuing southeast within the median of Lafayette Street to Agnew Road where it transitions to the east side of Lafayette Street until Montague Expressway, where the route shifts to the west side of Bassett Street. The transmission line proceeds southeast along Bassett Street to Bayshore Freeway (US 101), where the route crosses Bayshore Freeway and continues south along Duane Avenue interconnecting to KRS from the north.

3.2. Environmental Process

3.2.1. CEQA Process

This Initial Study (IS) has been prepared pursuant to the California Environmental Quality Act (CEQA), the amended State CEQA Guidelines (14 CCR 15000 et seq.). The purpose of the IS is to inform the decision-makers, responsible agencies, and the public of the Proposed Project, the existing environment that would be affected by the project, the environmental effects that would occur if the project is approved, and proposed mitigation measures that would avoid or reduce environmental effects.

A Mitigated Negative Declaration (MND) has been prepared based on the assessment of potential environmental impacts identified in the IS. All potentially significant impacts associated with the project can be mitigated to a level below significance; therefore, an MND can be adopted by the City in accordance with Section 21080 of the CEQA Public Resources Code.

3.2.2. CEQA Lead Agency

The City of Santa Clara is the lead agency for review of the project under CEQA because it must make a decision whether to adopt the MND and to approve or deny the Proposed Project.

The California Department of Fish and Wildlife (CDFW) is California's Trustee Agency for fish and wildlife resources and holds those resources in a trust by statute for all the people of the state.

3.2.3. Initial Study

The IS presents an analysis of potential effects of the Proposed Project on the environment. The IS is based on information provided by SVP, project site visits, comments received during the scoping period and at the project scoping meetings on April 25, 2024 and May 23, 2024, and additional research.

Construction activities and project operation could have direct and indirect impacts on the environment. The following environmental parameters are addressed based on the potential effects of the Proposed Project and potential growth-inducing or cumulative effects of the project in combination with other projects:

- Aesthetics
- Agricultural & Forestry Resources
- Air Quality
- Biological Resources
- Cultural Resources
- Energy
- Geology/Soils
- Greenhouse Gas Emissions
- Hazards & Hazardous Materials
- Hydrology/Water Quality
- Land Use/Planning
- Mineral Resources
- Noise
- Population/Housing
- Public Services
- Recreation
- Transportation
- Tribal Cultural Resources
- Utilities/Service Systems
- Wildfire
- Corona and Induced Current Effects
- Mandatory Findings of Significance

The IS has been organized into the following sections:

- Section 3: Introduction. Provides an introduction and overview describing the Proposed Project and the CEQA process and identifies key areas of environmental concern.
- Section 4: Project Description. Presents the project objectives and provides an in-depth description of the Proposed Project, including construction details and methods.
- Section 5: Environmental Analysis and Mitigation. Includes a description of the existing conditions and analysis of the Proposed Project's potential environmental impacts and identifies mitigation measures to reduce potentially significant impacts to less than significant levels.
- Section 6: Mitigation Monitoring Plan. Includes applicant proposed measures (APMs) and mitigation measures that SVP must implement as part of the project, actions required to implement these measures, monitoring requirements, and timing of implementation for each measure.
- Appendix A: List of Preparers. Lists the preparers of the IS.
- Appendix B: References. Lists the sources of information used to prepare the IS.
- Appendix C: AQ/GHG Report. Presents the modeling inputs and outputs used for the Air Quality and Greenhouse Gas sections of the IS.
- Appendix D: Draft Arborist Report. Presents an inventory and a general assessment of trees in the Project Area, and a Tree Protection Plan.
- Appendix E: Biological Resources Report. Lists the known and potential occurrences of special-status species within the Project Area.
- Appendix F: Scoping Report. Summarizes the public scoping effort and comments received.
- Appendix G: Electric and Magnetic Field Report.
- Appendix H: Public Comments on Draft IS/MND

4. PROJECT DESCRIPTION

Silicon Valley Power (SVP) proposes to construct the NRS to KRS 115 kV Transmission Line Project (Project), which would include constructing a new, 2.24 mile long overhead and/or underground 115 Kilovolt (kV) transmission line between two existing facilities, Northern Receiving Station (NRS) and Kifer Receiving Station (KRS), in the City of Santa Clara (City).

4.1. Project Title

NRS to KRS 115 kV Transmission Line Project (Project)

4.2. Lead Agency Name and Address

City of Santa Clara
1500 Warburton Avenue
Santa Clara, California 95050

4.3. Lead Agency Contact Person and Phone Number

Allie Jackman, Project Manager
Principal Electric Utility Engineer
Phone: (408) 615--6639
E-mail: AJackman@SantaClaraCA.gov

4.4. Project Location

The proposed Project is located in the City of Santa Clara within Santa Clara County, CA. The Project area is a fully developed urban area and includes several existing transmission lines, including lines owned by SVP and PG&E. The proposed Project would be located in Section 27, Township 6S, Range 1W, Mount Diablo Meridian.

The NRS is located south of the intersection of Bill Walsh Way and Stars and Stripes Drive, immediately adjacent to the southeast corner of Levi's Stadium. The KRS is located approximately 0.1 miles northwest of the intersection of Lafayette Street and Central Expressway. The NRS and KRS are approximately 2 miles away from each other.

4.5. Project Sponsor's Name and Address

Silicon Valley Power
881 Martin Avenue
Santa Clara, California 95050

4.6. General Plan Designation

Due to the linear nature of the Project, there are several general plan designations along the Project route. These include Very Low Density Residential, Low Density Residential, Medium Density Residential, Neighborhood Mixed Use, Parks/Open Space, High Intensity Office/R&D, Low Intensity Office/R&D, Light Industrial, and Heavy Industrial.

NRS is located on land with the general plan designation of Regional Commercial, and the KRS is on land designated as Light Industrial.

4.7. Zoning

There are several zoning designations along the Project route, including: MH - Heavy Industrial, ML - Light Industrial, R3-25D - Moderate Density Multiple Dwelling, CN – Neighborhood Commercial, PD- Planned Development, R1-6L – Single Family, and PD-MC – Planned Development – Master Community. The land that the NRS and KRS are on are zoned as Public or Quasi Public (City of Santa Clara 2023).

4.8. Surrounding Land Uses and Setting

Land uses within the Project area include residential, commercial, and industrial. Existing SVP transmission and distribution power lines are located near and within the project right-of-way (ROW).

North of Bayshore Freeway/Highway 101, land uses are primarily residential, with single and multi-family homes, and with commercial and industrial uses south of Montague Expressway and west of Lafayette Street. South of Bayshore Freeway/Highway 101, land uses are primarily light industrial uses and low-rise office buildings.

4.9. Project Overview

SVP is proposing to construct approximately 2.24 miles of a new overhead and/or underground 115 kV transmission line. The Project would be built to accommodate energization at 230 kV, however it would initially be operated at 115 kV.

The transmission line would start at the NRS, south of the intersection of Bill Walsh Way and Stars and Stripes Drive, approximately 0.1 miles southeast of Levi's Stadium. The transmission line would travel approximately 2.24 miles south along Lafayette Street, Bassett Street, and Duane Avenue and end at the KRS, approximately 0.1 miles northwest of the intersection of Lafayette Street and Central Expressway (See Figure 4-1, Project Overview).

4.9.1. Overhead and Underground Options

Two options are being considered for the northern segment of this project: overhead and underground. The northern segment that contains both overhead and underground options would start at NRS, follow Lafayette Street, and end approximately 300 feet south of the intersection of Lafayette Street and Agnew Road, The overall northern segment is approximately 0.74 miles long.

Depending on the option selected, the transmission line would be built either completely overhead (Option 1), or as a combination of underground and overhead (Option 2). The underground segment, if chosen, would place the transmission line underground beneath Lafayette Street after a portion of overhead alignment where the line would leave NRS and enter the median of Lafayette, then transition underground using a riser pole. The underground segment would transition to overhead approximately 300 feet south of the intersection of Lafayette Street and Agnew Road, then continue overhead south of Agnew Road to connect to the KRS. South of Agnew Road, the route would be overhead, regardless of the Option chosen.

4.9.1.1. Option 1 - Overhead Route Segment

Under Option 1, the entire Project would be overhead. Between NRS and the intersection of Lafayette Street and Agnew Road, there would be approximately twelve new poles spaced between approximately 150-500 feet apart, with foundations or directly embedded. Nine of these poles would be constructed within the median in Lafayette Street. The new pole structures would be designed to allow SVP to install 60 kV underbuilt lines as well.

4.9.1.2. Option 2 - Underground Route Segment

Under Option 2, the Project would be underground beneath Lafayette Street from near NRS to approximately 300 feet south of the intersection of Lafayette Street and Agnew Road, and then overhead south of Agnew Road to KRS. The underground option would include nine 8-inch conduits for electrical and three 4-inch conduits for communication. Option 2 would require two large overhead riser structure poles (see Figure 4-2, Typical Pole Types, 230 kV Riser Pole) where the route transitions from overhead to underground near NRS, and from underground to overhead near Agnew Road. Additionally, two large below grade transmission vaults would be installed, spaced approximately 100 feet apart near Hope Drive.

The underground option would be designed to accommodate voltages of 230 kV but would be energized at 115 kV. Based on preliminary analyses, the underground option would only be able to deliver about 83% of the power that the overhead option would be able to provide at 115 kV, due to heat dissipation requirements. The power delivery amount further declines at 230 kV, to 79.9%. Based on the current design, which was determined to be the most efficient for meeting project goals, the underground option would not allow for additional conductors within the duct bank. If additional capacity is required after the construction of the Project, such as future 60 kV lines, a new trench or overhead transmission line would need to be constructed.

4.10. Project Objectives

The objective of the Project is to increase SVP's system capacity and reliability. The transmission line will allow energy to be balanced and redistributed within SVP's transmission receiving stations. This line will allow SVP to serve load growth projected based on SVP's forecasted load growth within the City over the next several years.

4.11. Project Components

4.11.1. 115 kV Transmission Line

As illustrated in Figure 4-1, the majority of the new 115 kV transmission line would be constructed along Lafayette Street, Bassett Street and Duane Avenue. The new route would require approximately 39 poles (if overhead). The transmission line would be built to support a 230 kV transmission line, but would be initially energized at 115 kV, allowing for future capacity expansion. The Project is being designed with enough distance in between the conductor wires, so it will be in compliance with current Avian Power Line Interaction Committee (APLIC) guidelines (APLIC, 2006).

New poles are anticipated to range from 85 to 150 feet tall (average height of 115 feet). The poles will be at their tallest where they cross existing distribution facilities north and south of Montague Expressway, where the line crosses Montague Expressway and the Bayshore Freeway, where the line exits NRS, and where the line enters KRS. The distance between poles would vary but they would typically be spaced between approximately 150 to 500 feet apart. The clearance between the ground and the sag of the new 115 kV line between poles is expected to be not less than approximately 32 feet. New transmission structures would consist of tubular steel monopoles with direct embedded foundations, drilled pier foundations, or sub-grade drilled pier foundations.[1] Dead-end and angle structures, and tangent structures[2] supporting multiple circuits, would require steel monopoles with a galvanized finish. Pole diameters for

[1] Sub-grade drilled pier foundations are functionally the same as drilled pier foundations except that the top of the pier and the bottom of the structure are installed below the existing ground level to reduce the above ground footprint.

[2] Tangent structures are the most common types of poles that are sequenced in a straight line.
Dead-end structures are a type of power pole where conductors and ground wires are only pulled on one side, and are used when a transmission line ends, turns at a sharp angle, at major crossings such as highways or rivers, or if the line divides into different segments. These structures are designed to handle higher tension and are typically larger than tangent structures.
Angle structures are used when wires come to the pole at an angle.

tangent structures would be generally 2 feet to 4 feet or less, while custom dead-end poles would have diameters in the range of 4 feet to 6 feet.

Figures 4-2 and 4-3 illustrate examples of typical structure types that would be used for the Project.

The underground segment, if selected, would be installed within Lafayette Street which is approximately 80 feet wide. The conductors would be installed in an approximately 3-foot by 4-foot underground duct bank at least 3 feet from the top of the grade to the top of the duct bank. The underground segment would require riser poles (see Figure 4-2, Typical Pole Types, 230 kV Riser Pole) at the points where the line transitions from overhead to underground, or underground to overhead.

Tangent structures (see Figure 4-3, Typical Pole Types, 230 kV Tangent and Dead-end Poles) would be embedded directly into the soil or on a concrete foundation up to approximately 20 feet deep and back-filled with a pre-engineered crushed rock material or concrete slurry. Alternate foundations would be used only if necessary due to poor soil conditions.

Self-supporting dead-end and angle structures (see Figure 4-3) would require steel-reinforced concrete pier foundations. A typical foundation size is about 5 feet to 8 feet in diameter and can range in depth from 20 feet to approximately 35 feet. The concrete foundations extend above the ground-line by 1 or 2 feet in most cases.

The proposed Project would adhere to National Electrical Safety Code (NESC) and California Public Utilities Commission (CPUC) General Order 95, which define separation of structures from adjacent buildings or other utility facilities. Many of the existing power lines in the project vicinity are located along the edges of roadways, such as in landscaped reas, the perimeters of parking lots, or in sidewalks (CPUC, 2018). The new overhead transmission structures would be in the median of Lafayette Street north of Agnew Road, otherwise they would follow the edge of roadways.

Between Agnew Road and Montague Expressway, nine existing poles would be removed and replaced with seven new poles, which would carry existing circuits as well as the new circuit. The new poles would include an underbuild,[3] which will be designed for 115 kV but energized at 60 kV. South of Montague Expressway, four poles would be removed from the existing transmission line (to Norman Avenue) and replaced with four new poles. At some locations the poles will support a new 115 kV circuit as well as an existing 60 kV circuit and distribution and communication lines. Refer to Section 4.11.2 for further details.

4.11.2. Replacement of Existing Distribution and Telecommunication Lines

Some existing distribution lines and/or telecommunication lines along the proposed route would be transferred to the new poles to be underbuilt on the new poles. The existing, replaced poles would be removed and transported to SVP's stockyard or to an approved disposal site. In some cases, some existing wood poles may be left in place as an intermediate pole located between two new transmission poles. Where existing poles are left in place, the tops of these poles would be cut off, resulting in a shorter pole with conductor and/or cables still attached at the lower levels. All of the existing conductors and cables are expected to be reused for the project.

4.11.3. Substation Modifications

The NRS and KRS substations are existing substations that would be expanded or rebuilt prior to the proposed Project. The work to be undertaken at NRS and KRS are not part of the proposed Project. As needed, the substation work will be coordinated with Project designers for the new transmission line. The

[3] "Underbuild" means that a transmission or distribution line would be supported underneath a transmission circuit, on the same pole.

only change to NRS and KRS that will occur as part of the proposed Project is the placement of new poles within the substation to bring the new circuit to the appropriate substation rack.

Figure 4-1. Project Overview

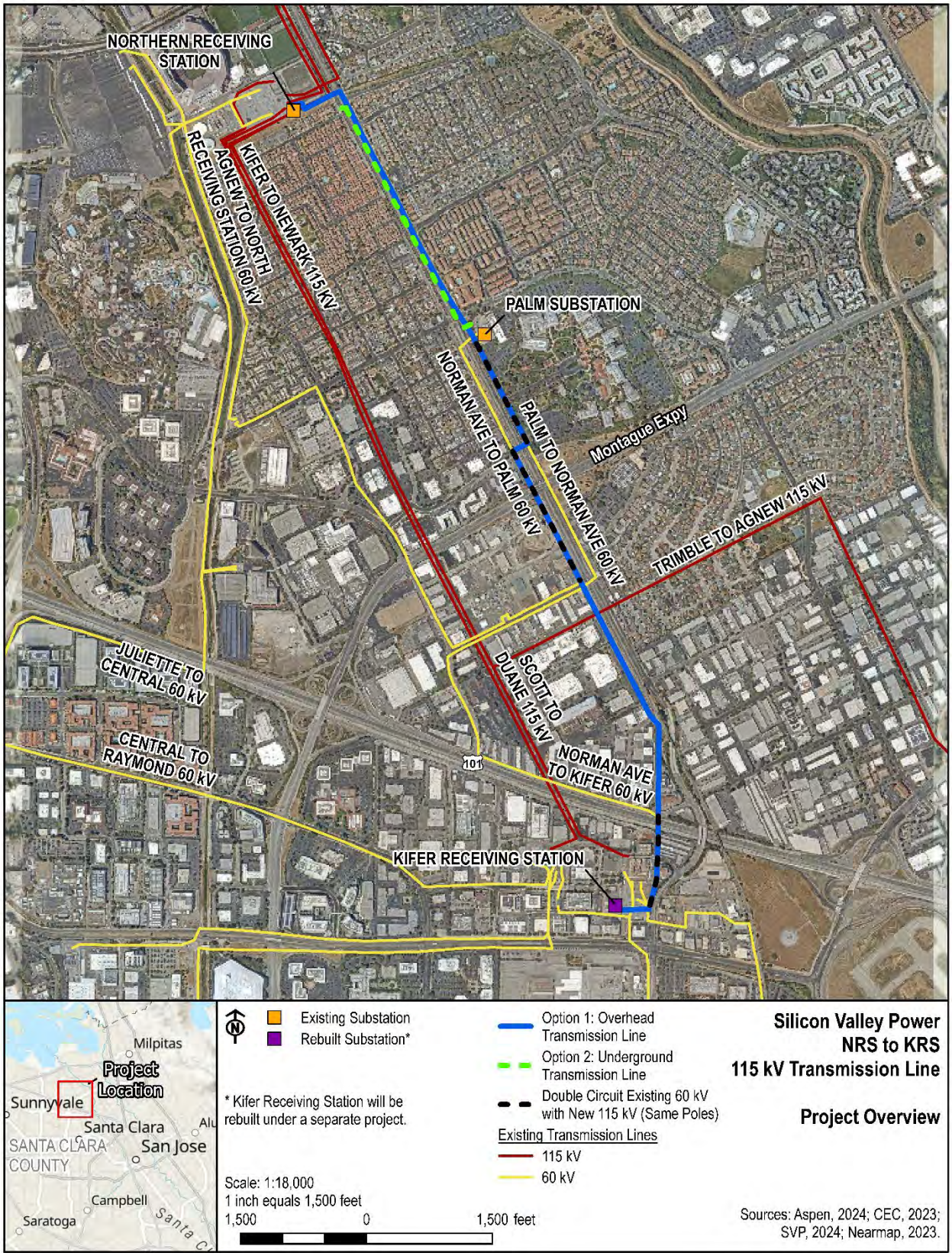

Figure 4-2. Typical Pole Types, 230 kV Riser Pole

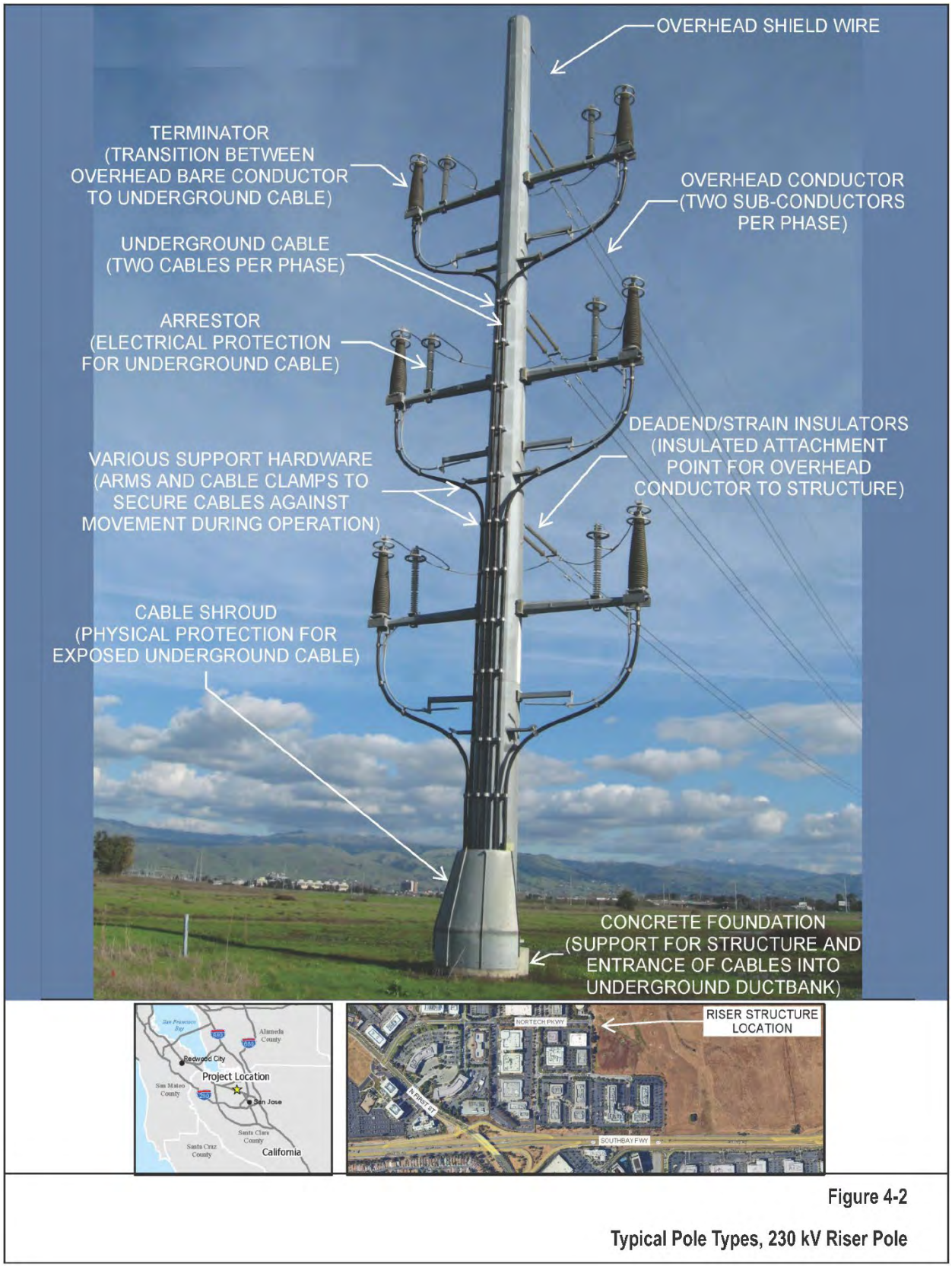

Figure 4-3. Typical Pole Types, 230 kV Tangent and Deadend Poles

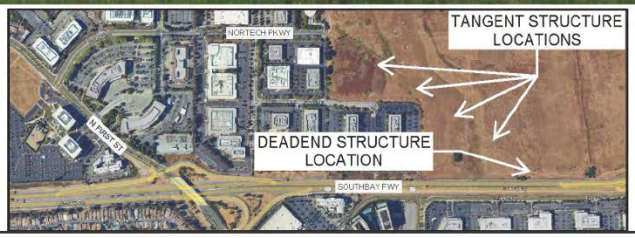

Figure 4-3

Typical Pole Types, 230 kV Tangent and Deadend Poles

4.12. Project Construction Activities

4.12.1. Staging Areas

Up to two temporary staging areas would be used during project construction. Staging areas would be located within the project vicinity and would be the assembly point for project personnel. The staging areas would also be the location for: temporary portable bathroom facilities; equipment storage during off work hours and weekends; materials storage; construction trailers; employee parking; and a meeting area as needed for project management.

Staging would occur at existing SVP substations or yards or in areas that are already disturbed. One example of a potential staging area would be SVP's storage yard, located at 1715 Martin Avenue, Santa Clara, CA. The staging area size may vary depending on negotiations with third-party property owners for temporary construction easements or property owner agreements. For the purpose of analysis, each staging area is expected to have a footprint of up to approximately 1 acre.

A secured, fenced location with access by an existing road is preferable. Preparation for site use is expected to include little or no grading at the staging areas aside from minor scraping to achieve an even grade or to remove any weeds that may be present. Gravel or rock may be temporarily added to the staging area as needed to address wet or muddy site conditions or reduce dust or track out from construction equipment. If there is no driveway into a site with a curb, temporary access (steel plates or cold patch over a culvert) may be placed to minimize potential damage to the curb. If there is no fence, a temporary fence would be erected. Any temporary fencing would typically be chain link with gates secured by a lock. A typical security light would be installed on site in a downcast position. After project completion, temporary security and access and site stabilization installations would be removed unless the property owner requests that they remain in place.

4.12.2. Work Areas

4.12.2.1. Substations

No new substations would be constructed as part of this project. Minimal work would be needed at the existing substations into which the new 115 kV transmission circuits would connect. The existing substations are undergoing rebuild or expansion efforts to modernize them. That work is not part of the proposed Project. New racks would be installed by those projects to support connections with the new conductors. Work at the substations would take place within the existing fenced areas.

4.12.2.2. Transmission and Distribution Power Poles

Pole work would include foundation excavation (i.e., subsurface drilling for either a direct embedded pole or construction of a concrete pier foundation), power pole assembly and installation, and installation of travelers (stringing blocks) to support wire stringing. Some segments of the power line would require transferring wires from existing poles to the newly installed poles and then removing the existing steel and wood poles. Work areas for new poles are expected to be located approximately every 150 to 500 feet. Where final design allows, power and distribution pole work would overlap. Final design would determine final pole locations.

Individual work areas for pole installation would typically be within the road ROW and SVP easements and extend approximately 50 feet in length. The width of Project encroachment into the public ROW and/or SVP's easement during pole installation and conductor stringing will be based on multiple factors, such as location of the pole in relation to the curb and private property lines.

Work areas would be accessed primarily from adjacent paved roads. Construction vehicles and equipment would be staged or parked alongside the road in the project ROW unless other arrangements have been made with the property owner.

Site preparation is not expected to be required for the majority of the project's pole work areas. However, some vegetation and tree removal or tree trimming may be required. Disturbed areas would be restored. Site restoration may include repairing any damage to sidewalks, paved parking areas, roadways, or curbs. Site restoration may also be needed in landscaped planters and lawns.

Project plans have been made to minimize any removal of the trees located beneath the proposed transmission line however if the removal or trimming of a tree is deemed necessary as the project progresses, care will be taken (see Section 4.12.9, Vegetation Clearance). Existing distribution power lines along some segments of the ROW would be partially removed or relocated and underbuilt on the new structures and the existing poles would be removed. Some existing distribution poles would be left in place, such as poles that skip-span with colinear transmission line, while some existing structures may be topped to leave a distribution-only structure remaining.

4.12.2.3. Pull and Tension

Pull and tension activities would require guard structure installation where required (such as at road crossings), pull and tension equipment staging, and temporary pole anchor installation, followed by pulling and tensioning of the conductor. Most pull and tension work areas are expected to be located within the ROW and may be located at most of the larger angle points of the transmission line route. It may be necessary to access areas in the ROW away from a pole work area to support pull and tension activities. Pull and tension site locations are preliminary and are subject to change based on final engineering and other factors. If pulling is required through an angle, or at the start of a new direction of the route, the site may be located outside the ROW or off the end of a ROW corner.

A pull and tension site to install conductor is typically located at a 1:3 ratio from a pole (pole height determines distance from the pole — for example, the pull and/or tension site for a 50-foot-tall pole would be located approximately 150 feet from the pole location). Temporary pull and tension work areas would typically be approximately 75 feet wide 150 feet long. Depending on the location, this temporary use area may be in the road ROW and/or in an easement obtained by SVP on private property.

Guard structures would be installed when the conductor is being pulled across a road or railroad tracks. Guard structures are temporarily installed during construction and removed after stringing of the conductor. A work area of approximately 40 feet by 50 feet would be used to install the guard structures. Final design would determine guard structure work area locations.

Construction vehicles and equipment needed at the pull and tension sites would be staged or parked within the project ROW or alongside access roads. Site preparation would not be needed for most of the project's pull and tension sites. Some vegetation removal or tree trimming may be required for vehicle access and to minimize the risk of fire. Site restoration may include repairing any damage to sidewalks, paved parking areas, roadways, or curbs. Site restoration may also be needed in landscaped planters and lawns.

4.12.3. Construction Access

Work areas along the route during construction and during subsequent operation and maintenance would be parallel and adjacent to existing roads and/or other paved parking areas.

4.12.4. Overhead 115 kV Transmission Line Construction

The following power line construction sections describe activities associated with the new transmission line construction, including associated installation, relocation and/or removal of existing taps, distribution lines, and the shoo-fly.

4.12.4.1. Pole Transportation

A line truck with trailer and a second transport vehicle (crew cab truck or half ton pickup) would be used to transport construction personnel to a pole work area. A line truck would haul new tubular steel poles to the site on a trailer and haul away any removed transmission or distribution poles. A line truck with a trailer would likely deliver one tubular steel pole per trip. Typically, a second transport vehicle would accompany the delivery truck during pole staging. Multiple removed distribution poles would likely be transported from work areas as part of the return trip, when feasible.

4.12.4.2. Transmission and Distribution Pole Removal

The existing transmission and distribution poles to be removed would likely be removed with a small crane. A power outage would be needed while the existing conductors are detached from the pole and while the pole is lifted out of its current location with the crane. Some poles may only have their tops removed; leaving the lower previously underbuilt cables in place. In this case, the same crane would remove the pole top after the pole has been cut with a chain saw. All removed poles or pole segments would be loaded onto a trailer and transported to a designated storage or disposal area.

4.12.4.3. Pole Installation

Expected dimensions for tubular steel poles are provided in Table 4-1, Summary of Approximate Pole Metrics. The line would be designed with approximately 40 poles total. Pole installation would occur during daylight hours. Typically, 4 to 5 truck trips would be required to set a new power pole and remove an old transmission or distribution pole from a work area.

Table 4-1. Summary of Approximate Pole Metrics

Structure Feature	Approximate Metrics
Tubular Steel Pole	
Diameter	2–6 ft. (typical range, pole height dependent)
Foundation depth	20 to 35 ft. (typical range, pole height dependent)
Individual permanent footprint	50 sq. ft. (typical range), for a typical pole auger diameter of 8 ft.
Approximate number to be installed	40
Average work area at each site	4,000 sq. ft.
Total permanent footprint	Approximately 2,000 sq. ft.

Installation of tubular steel poles (TSPs) would include the following steps for site preparation, foundation installation, and pole installation. To prepare the site, the pole location would be staked. The work area would be flagged and required stormwater best management practices (BMPs) installed. If required, a crane pad would be prepared, which may require surface blading to create a level surface. TSP foundation installation would include:

- Excavating the hole;
- Installing forms, rebar, and anchor bolts;
- Pouring concrete;
- Removing forms; and
- Grooming the base area, including any landscape restoration.

After the new TSP is installed, any transmission or distribution line would be moved to the new pole and the old transmission or distribution pole would be removed. Excess soil onsite would be feathered around the work area if there is natural ground present and/or transported to an area Service Center or other appropriate facility for disposal.

TSP concrete pier foundations would be approximately 5 to 8 feet in diameter and would extend approximately 20 to 35 feet below the ground surface. A line truck would be used to haul foundation forms, anchor bolts, rebar, and pole structures to work areas. The line truck with a boom would be used to place foundation forms, anchor bolts, and rebar in place prior to pouring concrete for the foundation and to remove the forms following completion of the foundation.

A concrete mixer truck capable of delivering 9 to 10 yards of concrete would be used to deliver and pour concrete for the TSP foundations. Concrete trucks would not be washed out at pole locations but rather would be rinsed using portable stations established for concrete clean-up at project staging areas. If applicable, a backhoe or skid loader would be used to place gravel around the TSP after formwork has been removed and to groom the area surrounding the pole installations. A crane would be used to place the TSP on the finished foundation.

4.12.4.4. Pull and Tension Work Areas

A line truck with a trailer and a second transport vehicle (crew cab truck and/or half ton pickup) would be used to transport construction personnel to each pull and tension work area. A line truck would haul reel trailers and mounted reel stands holding the conductor to the site. An 18-wheeled truck with a trailer may be used to transport more than 1 reel to the work area. Pullers would be mounted on the line truck or trailer to install the conductor. Old transmission or distribution lines that would not be reused would be removed from the sites on a line truck with a trailer. Temporary pole anchors may be installed in the natural ground to stabilize poles when pulling the conductor into place.

4.12.4.5. Conductor Installation

Typically, the following seven (7) steps would be taken to install new conductor (wire stringing):

1. Travelers (pulleys) would be installed on the ends of insulators on each pole frame. A line truck with a bucket would be required to install the pulleys. Installation of pulleys may be phased to correspond with the specific section of wire stringing.
2. A truck, an all-terrain vehicle (ATV), or a worker would pull a light rope (sock line) in line with the route and lace it through the travelers. For this operation, a line truck with a bucket would be used or a worker may climb the structure.
3. When the sock line is laced through the travelers for the length of the pull, the sock line would be connected to a hard line (steel cable). The hard line would be on a reel that would be on a tensioner. Typically, the reel and tensioner would be located on a line truck or semi-truck trailer.
4. The sock line would be pulled back with a truck, an ATV, or a worker pulling the hard line into place. The sock line would be removed from its connection to the hard line.
5. That end of the hard line would be connected to a conductor. A trailer-mounted tensioner would then pull the hard line and connected conductor in the reverse direction.
6. The conductor would be sagged (tightened) into place using the tensioner.
7. The conductor would be clipped into the insulators and the travelers would be removed by using the line truck with a bucket or a worker may climb the structure.

4.12.4.6. Guard Structures

Prior to stringing conductors, temporary guard structures would be installed at railroad and road crossings, and other locations where the new conductors may otherwise come into contact with electrical, communication, or rail facilities or vehicular traffic during installation. Guard structures would be positioned and configured to catch and support the weight of the conductor if it unexpectedly drops or sags excessively during the tensioning process. These structures would be placed on one side or on each side of the road or other location being crossed. For example, the temporary structures are expected to be installed adjacent to the Union Pacific railroad tracks as the transmission line crosses the tracks along Lafayette Street near NRS, near Agnew Road, and near Montague Parkway. Major road crossings include Lafayette Street, Montague Expressway, and the Bayshore Freeway.

Each temporary structure would typically consist of a wood pole with a frame at the top that resembles a "Y" or "H". Methods for installation and removal of the clearance structures would be similar to those described for wood poles and would be installed approximately 6 to 10 feet deep. Foundations and grading would not be required. Netting would be installed between the 2 Y-frame or H-frame structures, as needed, to prevent contact between the new conductor and an existing facility. Where necessary, traffic control would be provided during installation and removal of these temporary guard structures and as specified in encroachment permits.

4.12.4.7. Existing Pole Removal

The existing wood transmission poles on the east side of Lafayette Street between Agnew Road and Montague Expressway, some wood poles along Bassett Street and some poles along Duane Avenue would be removed after the transmission and/or distribution line is transferred to the new structures. The old conductor would not be replaced and would be transferred to the new structures. Next the removal would consist of the above and below-ground portions of the pole. Any holes left from removing the poles would be backfilled with spoils that may be available as a result of the excavation for new poles and using imported fill as needed. If poles are removed from paved areas, paving will be replaced to match existing surfaces.

4.12.5. Underground 115 kV Transmission Line Construction

This section describes the proposed construction methods for construction of the underground transmission line for Option 2, which would occur for approximately 0.74 miles within the southbound lanes of Lafayette Street from near NRS to Agnew Road. Installation of the underground transmission line, duct banks, and splice vaults would be completed using a cut-and-cover method (open trenching) along the route. The major underground construction activities would begin with vault installation, followed by trenching and duct bank installation, and, finally, cable installation. In addition, riser poles would be constructed at each end of the underground segment.

4.12.5.1. Trenching/Duct Bank Installation

Prior to trenching, SVP would notify other utility companies (via the Underground Service Alert [USA]) to locate and mark existing underground structures along the proposed alignments, and also would conduct exploratory excavations (potholing) to prove the locations for proposed facilities as needed.

After the route is marked, the pavement within the trenchline would be removed. Trenching activity requires one work crew progressively excavating and hauling off material. Upon reaching final trench excavation depth, a second work crew secures the trench walls via shoring. Once the shoring process is complete, a third installs PVC conduit to provide a raceway for the electrical cable. Upon completion of PVC conduit laydown, the trench is backfilled and the trench alignment temporarily paved. Final roadway restoration

and asphalt paving would be completed once the cable is fully installed, tested and released for operation. This avoids having to break the final pavement to replace any section of cable should it fail during testing.

Trenching would progress at an approximate rate of 50 feet per day. The length of open trench at any one time would typically range from 150 feet to 300 feet. Steel plating would be placed over the trench to maintain vehicular and pedestrian traffic across areas that are not under active construction. Traffic controls would also be implemented to direct local traffic safely around the work areas (see Section 5.17, Transportation). The total surface of the trench plates over backfilled areas would vary between approximately 100 to 500 feet in length each day until it has reached a surface large enough (typically 300 feet) for temporary pavement restoration. Temporary trench paving would likely occur once a week to minimize the amount of trench plates on the road.

No long-term road closures would be expected during trenching, although one-way traffic controls as well as short-term road closures of road segments up to 1,500 feet would be necessary to allow for certain construction activities and to maintain public safety.

As the trench for the underground 115 kV cable is completed, SVP would install PVC conduits and concrete encasement around the duct bank. The duct bank cover would measure at least 3 feet wide by 3 feet deep, including a thermal backfill and asphalt or dirt surfaces. The typical dimensions of a single circuit reinforced duct bank are approximately 3 feet 7 inches wide by 3 feet 4 inches deep, although typical dimensions may vary depending on soil stability and the presence of existing structures. The trench would be widened or shored where needed to meet California Occupational Safety and Health Administration (OSHA) safety requirements.

Where the electrical transmission duct bank would cross or run parallel to other substructures (which have operating temperatures at earth temperature), a minimum radial clearance of 12 inches would be required. These substructures include gas lines, telephone lines, water mains, storm lines, and sewer lines. In addition, a 5-foot minimum radial clearance would be required where the new duct bank crosses another heat-radiating substructure at right angles. A 15-foot minimum radial clearance would be required between the duct bank and any parallel substructure whose operating temperature significantly exceeds the normal earth temperature. Such heat-radiating facilities may include other underground electric transmission circuits, primary electric distribution cables (especially multiple-circuit duct banks), steam lines, or heated oil lines.

SVP would identify other utilities during final design, evaluate their proximity and potential for induced current and/or corrosion, and in coordination with the utility-system owner, determine whether steps are necessary to reduce the potential to induce current or cause corrosion. SVP would take the necessary steps in coordination with those utility system owners to minimize any potential effects through measures, such as increased cathodic protection or utility relocation. The steps are summarized as follows:

- During final design, prepare study of corrosion and induced currents.
- Send results of study to each affected utility system owner for review and comments.
- Owners submit requirements for protection of each of their facilities.
- SVP makes changes accordingly or compensates owner for future protection measures, per the owner's preference.

Once the PVC conduits are installed, thermal-select or controlled backfill would be transported, placed, and compacted. A road base backfill or slurry concrete cap would be installed, and the road surface would be restored in compliance with the City requirements. While the completed trench sections are being restored, additional trenchline would be opened farther down the street. This process would continue until the entire conduit system is in place.

All backfilling material would be engineered material called flowable thermal concrete (FTC), and flowable thermal backfill (FTB). Each has unique properties specific to its application, while both are designed to

have thermal characteristics for heat displacement. For a typical trench, the bottom 2 feet encases the PVC conduit with FTC, while the remainder of the trench would be filled with "diggable control density fill" FTB to the roadway sub-base level. From that point, all restoration would be based upon matching the street's existing sub-base and surface, i.e., asphalt, concrete, or combination of the two. The excavated material would not be used as backfill. The estimated total amount of excavated materials to be removed for trenches, duct banks, and vaults is 6,000 cy. The final volume of excavated materials may vary, depending on what work is required to avoid existing underground utilities.

The total duration of trench excavation and manhole installation is estimated to take approximately four months. Cable pulling, discussed in Section 4.12.5.3, is a standalone operation that would be performed after the vaults are installed, the duct bank is fully poured, and the trench backfilled and temporarily paved. Final paving restoration would be scheduled after the cable is fully installed and operative. The City encroachment permit would likely require a full lane of pavement restoration which in turn would require a two-lane closure over a 1,500-foot work area. Final paving would take approximately 15 days along Lafayette Street, and the total duration of paving and cleanup would take around 6 weeks.

Equipment necessary for trenching in closed lanes include pavement saw cutting equipment, pavement grinder, excavators, and dump trucks. Section 4.12.7 lists all equipment expected to be used during construction. SVP expects four dump trucks to be used to haul trench and excavation materials and import backfill to the project. The number of daily total haul truck trips would depend upon the rate of the trenching, which is estimated to progress at an approximate rate of 50 feet per day over 6 months. Jackhammers would be used when needed to break up sections of concrete that the saw-cutting and pavement-breaking machines cannot reach. Other miscellaneous equipment would include a concrete saw, various paving equipment, and pickup trucks. In general, no equipment would be left at the trench site overnight, with the exception of an excavator.

4.12.5.2. Vault Installation

The underground segment would require two (2) splice vaults to be installed: the first vault would be installed approximately 1,575 feet measured from the riser pole near Agnew Road and heading north/northwest along Lafayette Street, and the second vault would be installed approximately 100 feet further north/northwest from the first one. The typical complete pre-cast vault installation would take 4 to 7 days, working 10 hours per day from breaking ground to finishing grade. For each vault, the excavation would be approximately 34 feet long, 14 feet wide and up to 15 feet deep. Excavation for vaults of this size would require shoring components such as driven sheet piles or slide rail steel sheeting. Once the initial excavation and shoring is installed, preparation of the sub-base would consist of the installation of crushed rock for leveling purposes. If present, groundwater would be tested and either pumped out to a controlled containment or discharged as would occur during trenching.

Once the vault preparation steps (excavation, shoring and finish grade leveling) are completed, setting the vault is performed via sectional lifts of the three vault pre-cast sections using either a hydraulic or a lattice type crane. With all sections of the vault set in place, backfilling can start as the shoring is removed.

Lane closures would be required at each vault location according to the following sequence:

1. Vault installation would be performed prior to trenching/duct bank installation and would require an approximately 4- to 7-day multi-lane closure for each vault.
2. Conduit cleaning/proofing would be performed after the duct bank is completely installed and backfilled. This requires an approximately 2-day lane closure.
3. Cable pulling would require an approximately 2-day lane closure per cable phase (approximately 6 total days of lane closure).
4. Racking/splicing would require approximately 2 to 3 days at each of the two vaults.

The major equipment required for vault installation would consist of an excavator, pickup trucks, end dump trucks, stake trucks for material, 75-ton crane, crane riggers truck, tractor trailers for sheet piling delivery, tractor trailers for delivery of precast concrete manhole sections, and possibly water trucks and/or containment water tanks (see also Section 4.12.7).

4.12.5.3. Cable Pulling, Splicing, and Termination

The proposed cable system would consist of three major components: the cable, splices that connect cable sections, and terminators that connect the cable to the equipment at the substations. Cable installation would occur after the underground vaults and duct banks are installed.

Cable Pulling

The cable for the proposed Project would consist of six individual cables (two per electrical phase) and a communication fiber optic cable. Pulling between one riser structure and one vault typically would take approximately 2 to 3 days, working 10 hours per day. To pull each cable through the duct bank, a cable reel would be placed at the end of a duct bank section at the riser structure, and a pulling rig would be placed at the other end of the duct bank section at the vault. With a small rope called a “fish line,” a larger rope would be pulled into the duct. The large rope would be attached to pulling eyes on a conductor end, and the large rope would pull the conductor into the duct. To ease pulling tensions, a lubricant would be applied to the conductor as it enters the duct. The three electric phases and one communication cable would be pulled through their individual ducts at the rate of two of the three sections between the riser and vault per day. The project would require the pulling between riser and vault to be repeated twice for each vault. One pull would be from the northern riser to the vault and the second pull would be from the southern riser to the vault. At the vault location the two cable pulls would be spliced together.

Cable Splicing

Prior to starting the actual splicing, the splice vaults would be outfitted with steel racks that would ensure the cable splices are securely affixed to the vault’s inner walls. A splice trailer would be positioned adjacent to the vault manhole openings, and a mobile power generator would be located directly behind the trailer. The vaults must be kept dry to prevent water or impurities contaminating the unfinished splices. Racking and splicing is estimated to take approximately 2 to 3 days at each vault.

Termination

At the southern end of the underground segment (Option 2), the conductors would transition to overhead on riser poles approximately 120 tall. Self-supporting riser structures require steel-reinforced concrete pier foundations. A typical foundation is about 5 feet to 8 feet in diameter and can range in depth from 20 feet to approximately 35 feet. The concrete foundations extend above the ground-line by 1 or 2 feet in most cases.

4.12.6. Water Use

Water may be used during construction of the drilled concrete pier foundations for the tubular steel poles. One method to stabilize the hole while it is being excavated is to temporarily fill it with a slurry consisting of water and a stabilizing agent, such as a polymer-blend or bentonite. The water would be transported to the pole location and likely mixed with the stabilizing agent as the water is poured into the excavated hole. As the concrete is placed in the hole, the slurry is displaced by the concrete and pumped out of the hole and into a holding tank. The collected slurry in the tank would then be transported away from the work area to an approved disposal site. For a foundation 8 feet in diameter and 35 feet deep, about 1,758 cubic feet of water would be required at each foundation site.

4.12.7. Construction Workforce and Equipment

Table 4-2, Anticipated- Personnel and Equipment Required for Project Construction (based on typical estimates), lists the expected equipment and personnel by construction activity. Not all equipment and personnel may be used during all portions of the activity. This is a preliminary equipment list; other equipment may be identified when project design is finalized or during construction if unexpected conditions require additional equipment. Construction of Option 2 would include underground construction, as well as overhead construction, and therefore may use all the equipment listed. Option 1 would only include overhead construction, and therefore would only use the equipment listed as overhead construction. Designated fueling areas would be identified as part of the final design when project staging areas are identified.

Table 4-2. Anticipated Personnel and Equipment Required for Project Construction (based on typical estimates)

Activity	People	Quantity of Equipment	
Overhead Construction			
Survey	1 to 2	1 Pickup truck	
Auger Holes for Poles	3	1 Line truck with auger attachment 1 Pickup truck 1 Backhoe or skid loader	
Concrete Pier Foundation Installation	4	1 Line truck 1 Backhoe or skid loader 1 Drill rig 1 Crane	1 Water truck 1 Pickup truck 3 Cement trucks
Material Haul	3	1 Line truck with trailer	
Pole Delivery	3	1 Pole delivery truck 1 Pickup or light SUV	
Install Tubular Steel Poles	5 per crew	1 Line truck with boom 1 Crane 2 Crew-cab pick-up truck	1 Light-duty pick-up truck 1 Backhoe or skid loader
Steel Pole Installation and Transmission/Distribution Pole Removal (Ground access, per crew; construction would include 2 crews)	5 per crew	2 Crew cab truck 2 Line trucks with bucket and trailer (transports boom and auger) 1 Backhoe or skid loader	
Conductor Installation (includes moving transmission/distribution to new pole, up to 3 crews may be present during wire stringing activities)	5 per crew	1 Line truck or semi-truck with wire reel 2 Pickup trucks 2 Line truck with bucket/crane	1 Line truck with wire puller 1 Line truck with wire tensioner
Substation Modifications (equipment expected is for each substation)	3	1 Line truck with bucket 1 Pickup truck	
Underground Construction			
Underground Delivery and Set-Up	2	1 Rigging truck 1 Small mobile crane 1 Mechanics truck (as needed)	2 Shop vans 1 Two-ton flatbed truck
Underground Transmission Line	5 per crew	4 to 10 Pickup trucks 2 Two-ton flatbed trucks 2 Flatbed boom trucks 1 Rigging truck 1 Mechanic truck 1 Winch truck	1-2 Large mobile crane(s) 2 Cable reel trailers 1 Splice trailer (40-foot) 1 Rollers 1 Paver 1 to 3 Portable generators

Activity	People	Quantity of Equipment	
		1 Cable puller truck 2 Cement trucks 2 Shop vans 2 Crawler backhoe 2 Large backhoe 4 Dump trucks 1 Small mobile crane	As needed: • Air compressors • Air tampers • Baker (water) storage tanks • Pumps • Shoring boxes • Tank trucks

4.12.8. Construction Traffic and Circulation

Construction would require temporary lane closures along various public and private roads within the project area over the approximately 14-month construction duration for the overhead alignment (Option 1). Temporary lane closures would be coordinated with local agencies. SVP would obtain encroachment permits to conduct work in public ROWs in accordance with applicable City requirements. The underground alignment for the northern segment (Option 2) would require a longer construction duration and greater traffic control and longer lane closures.

4.12.9. Vegetation Clearance

Some vegetation and tree removal or tree trimming may be required for pole installation and vehicle access and to minimize the risk of fire by providing clearance between conductors and trees. In general, trees would be avoided where feasible; isolated tree trimming, or removal would be coordinated with the property owner or operator. The new transmission line would be routed along the edges of city streets or in the median of Lafayette Street (see Figure 4-1, Project Overview) where many trees currently exist. Most of the tree trimming would take place between power poles to ensure there is adequate electrical clearance between the conductors and tree branches during all types of weather conditions. The lowest conductor height would be approximately 32 to 40 feet above the ground. In general, trees that are located below the 115 kV transmission line would need to be trimmed so that they are no taller than about 25 feet to 30 feet above ground. Tree branches that are closer than 5 feet vertically or 10 feet horizontally to any conductor or wire (with or without wind) would be trimmed to meet the minimum clearance. The project is being designed to limit tree removal as much as possible and the existing trees are within the 25-30 feet height range.

Trees would also be trimmed to maintain adequate clearance to the lower voltage conductors and various cables that would be attached to the poles below the 115 kV conductors. However, these conductors and cables are existing wires that would be transferred to the new poles at roughly the same height as their current position; therefore, the route segments that have existing power lines should already have adequate clearance to trees, and tree trimming should be minimal for these segments.

4.12.10. Erosion and Sediment Control and Pollution Prevention

A small, temporary stockpile of excavated dirt may be located near a pole hole excavation until it is loaded into a truck and transported offsite or until it is used as backfill for the hole. Stockpiles would be located away from and/or down-gradient of waterways. Sediment control BMPs would be implemented to manage temporary stockpiles.

Construction debris and waste would be transported to the staging area(s) or to an area Service Center as needed for recycling or disposal. Existing wood poles would be removed to an area Service Center or staging area collection bin for transport with other materials for disposal at a licensed Class I or Class II landfill or a composite lined portion of a solid waste landfill. SVP would comply with all laws and regulations regarding the disposal of the existing wood and steel poles.

If underground storage tanks (USTs) or aboveground storage tanks (ASTs) are found to be located along the project route and the route cannot be adjusted to avoid disturbance, the tanks would be removed prior to project construction or segregated from the work area and not disturbed. If it is determined that removal of tanks is necessary, a separate work plan describing the proper decommissioning and removal of the tanks and removal of any associated impacted soil would be prepared prior to removal.

4.12.11. Cleanup and Post Construction Restoration

During construction, construction debris would be picked up daily from line work job site areas and hauled back to a staging area or an area Service Center for recycling or disposal. Construction debris would be picked up from substation construction areas, stored in approved containers on site, and hauled away for recycling or disposal periodically during construction. SVP would conduct a final survey to document that clean-up activities have been successfully completed as required.

Work areas where vegetation management and/or tree trimming occurred are expected to revegetate naturally due to the limited disturbance. If trees are removed, it would likely be because the final condition of the project requires it and not because of temporary construction activities.

4.12.12. Construction Schedule

The construction phase is expected to take approximately 14 months for the overhead option and is anticipated to be completed by early 2028. The underground option would take significantly longer. Construction would start with mobilizing construction equipment, crews, and materials to the staging areas. In general, construction would then begin with below grade work (excavating holes for poles and concrete pier foundations) and would be followed by pole installation and wire stringing. Construction sequencing and coordination of power outages may require that some route segments of the line be built first, with the construction of other segments later. All types of construction activities may occur simultaneously.

4.13. Operations and Maintenance

Once the new NRS to KRS 115 kV transmission line is built and energized, SVP's existing maintenance and operations group would assume inspection, patrol, and maintenance duties, as needed. No additional staff would be required after project construction work is completed.

4.14. Other Permits and Approvals

SVP would obtain permits for the Project, as needed, from federal, State, and local agencies. Table 4-3, Permits that May be Required for the Proposed Project, lists permits and approvals that may be required for Project construction.

Table 4-3. Permits that May Be Required for the Proposed Project

Agency	Jurisdiction	Requirements
Federal		
U.S. Fish and Wildlife Service (USFWS)	Potential impacts to federally listed species or critical habitat.	▪ Section 7 consultation (through federal review process, likely not required)
Federal Aviation Administration (FAA)	Potential impacts to air traffic	▪ An FAA Part 77 Notice would need to be filed for objects affecting navigable airspace, allows FAA to identify potential hazards in advance.
Union Pacific Railroad	Railroad ROW	▪ Railroad encroachment permit

Agency	Jurisdiction	Requirements
State		
Regional Water Quality Control Board, Region 2 (San Francisco Bay)	Consistency with state water quality standards	▪ 401 Certification ▪ Storm Water Construction General Permit 99-08-DWQ ▪ National Pollutant Discharge and Elimination System (NPDES) Permit ▪ Waste Discharge Requirements (WDRs)
California Department of Fish and Wildlife (CDFW)	Protection of state-listed species	▪ Incidental Take Permit (likely not required)
CDFW	Protection of waters of the State	▪ 1601/1602 Permits (likely not required)
Local/Regional Agencies		
City of Santa Clara	Construction, modification, or alteration of power line facilities	▪ New or expanded ROW Grant ▪ Encroachment Permit including Traffic Control Plans

4.15. Electric and Magnetic Fields Summary

4.15.1. Electric and Magnetic Fields

Recognizing that there is a great deal of public interest and concern regarding potential health effects from exposure to electric and magnetic fields (EMF) from power lines, Appendix G, EMF Report, provides information regarding EMF associated with electric utility facilities and the potential effects of the proposed Project. Potential health effects from exposure to electric fields from power lines (produced by the existence of an electric charge, such as an electron, ion, or proton, in the volume of space or medium that surrounds it) are typically not of concern since electric fields are effectively shielded by materials such as trees, walls, etc.; therefore, the majority of the following information related to EMF focuses primarily on exposure to magnetic fields (invisible fields created by moving charges) from power lines. However, this Initial Study does not consider magnetic fields in the context of the CEQA and does not make a determination of environmental impact. This is because (a) there is no agreement among scientists that EMF does create a potential health risk, and therefore, (b) there are no defined or adopted CEQA standards for defining health risk from EMF. As a result, EMF information is presented for the benefit of the public and decisionmakers.

After several decades of study regarding potential public health risks from exposure to power line EMF, research results remain inconclusive. Several national and international panels have conducted reviews of data from multiple studies and state that there is not sufficient evidence to conclude that EMF causes cancer. The International Agency for Research on Cancer (IARC), an agency of the World Health Organization (WHO), and the California Department of Health Services (DHS) both classified EMF as a possible carcinogen (WHO, 2001; DHS, 2002).

In addition, the 2007 WHO [Environmental Health Criteria (EHC) 238] report concluded that:

Evidence for a link between Extremely Low Frequency (ELF, 50–60 Hz) magnetic fields and health risks is based on epidemiological studies demonstrating a consistent pattern of increased risk for childhood leukemia. However, "…virtually all of the laboratory evidence and the mechanistic evidence fail to support a relationship between low-level ELF magnetic fields and changes in biological function or disease status.…the evidence is not strong enough to be considered causal but sufficiently strong to remain a concern."

"For other diseases, there is inadequate or no evidence of health effects at low exposure levels."

Currently, there are no applicable regulations related to EMF levels from power lines or substations. However, due to input received during the public scoping process, this discussion has been added, which

discusses the results and impacts from the EMF study that was prepared. See Appendix F, Scoping Report, for a summary of the comments received during the scoping process, and Appendix G for the EMF Report.

4.15.2. EMF in the Proposed Project Area

Residents near the proposed Project have expressed concerns about the location and the close proximity to their homes of the overhead 115 kV transmission line (See Appendix F, Scoping Report for a summary of comments received). These concerns are focused on the east side of Lafayette Street, near the northern portion of the Project that is proposed in the median of Lafayette Street. SVP does not have adopted practices regarding EMF, so this section discusses general practices regarding EMF as well as guidance provided by CPUC as part of General Order 131-D.

Magnetic field strength is a function of both the electric current carried by the wires, and the configuration and design of the three conductors that together form a single circuit of an electric transmission line. Magnetic field strengths for typical transmission power line loads at the edge of an overhead transmission system right-of-way generally range from 10 to 30 milliGauss (mG) (NIEHS, 2002). Exposure to EMF occurs in the community from sources other than electric transmission lines. Research on ambient magnetic fields in homes indicates that levels below 0.6 mG could be found in half of the studied homes in the centers of rooms, and that the average levels in the homes away from electrical appliances was 0.9 mG. Immediately adjacent to appliances (within 12 inches), median field values are much higher, for example: 4 to 8 mG near electric ovens and ranges, 20 mG for portable heaters, or 60 mG for vacuum cleaners (NIEHS, 2002).

Table 4-4. Estimated Magnetic Field Data for Household Electronics

Item	Magnetic Field Measurements at 1 foot distance* (mG)
Ceiling Fans	3 to 30
Electric Ovens	4 to 5
Electric Ranges	8 to 30
Electric Can Opener	40 to 300
Microwave Ovens	4 to 200
Washing Machines	7 to 30
Portable Heaters	20 to 40
Vacuum Cleaners	60 to 200

Source: NIEHS 2002

* Values shown are presented for the median EMF value, to the highest EMF value.

SVP has prepared an EMF Study, included as Appendix G to this IS/MND, which presents calculations conducted along the proposed Project route to estimate the magnetic fields strength when measured 1 meter above ground at various distances, ranging from directly underneath to 60 feet away, from the proposed route centerline. The EMF study analyzes the existing conditions of currently operating power facilities, as well as future conditions after installation of the proposed transmission line. The EMF values presented represent the highest expected magnetic field strength for all conditions represented in each segment. Due to this, only Option 1, Overhead, was analyzed in the EMF report, because EMF values are lower for buried transmission lines, especially for lines that would be buried deeper than 5 feet.

The impacts of EMF from the proposed Project are described based on load data for existing conditions (2024) and 2028, when the Project would be energized.

The EMF study breaks the Project into 19 segments for analysis. Segments 1 through 6 are the nearest segments to residential land uses, so this discussion will focus on those segments, as this is where the most sensitive receptors are located. Additionally, the majority of the scoping comments came from

residents located to the east of the line, so the data in Table 4-4, below is presented for locations 60 feet to the east of the Project's centerline. See Appendix G for more details on the methodology used and the full set of data.

Table 4-5. Estimated Magnetic Field Data for Sensitive Receptor Community to East of Project

Segment	Existing 2024		Future 2028	
	Normal Load (mG)	Peak Load (mG)	Normal Load (mG)	Peak Load (mG)
1	0.0	0.0	16.0	20.0
2	6.4	8.0	14.3	17.9
3	0.9	1.1	14.2	17.7
4	0.4	0.5	13.5	16.8
5	1.8	2.3	11.9	14.8
6	1.8	2.3	11.9	14.9

Source: Appendix G, EMF Report
Notes:
1. "Peak Load" is defined as 100% of the estimated peak load as reported by SVP under typical system operations. "Normal Load" is defined as 80% of the estimated peak load.
2. The Magnetic Field Values are the estimated resultant RMS magnetic field at 60 feet east from Project centerline, at a height of 1 meter above the ground.

As shown in Table 4-4, the Proposed Project, operating at Peak Load, would result in an increase of EMF ranging from approximately 10 mG (in segment 2) to 16 mG (in segment 3). Operating at normal load, this increase would range from approximately 8 mG (in segment 2) to 16 mG (in segment 1).

As stated above, there is no defined or adopted threshold for EMF impacts, since there is no agreement among scientists that EMF creates a potential health risk. However, comparing the estimated EMF values of average household appliances presented in Table 4-4, with the EMF values presented in Table 4-5, reveals that the EMF values present within homes can exceed the amount of EMF that is emitted at the edge of the right of way.

4.15.3. EMF Management Plan for the Proposed Project

The proposed Project is not required to mitigate EMF. However, due to extensive public concern, SVP has reviewed the recommendations by the CPUC for EMF Design Guidelines (CPUC 2006). The CPUC requires utilities to implement "no-cost" and "low-cost" measures to reduce public exposure to EMF. Although SVP is not required to follow CPUC guidelines, SVP has agreed to implement the EMF Design Guidelines below in the project to the extent feasible to reduce EMF within residential areas.

The EMF Design Guidelines include the following measures, any or all of which may be selected to reduce the magnetic field strength levels from the proposed transmission line:

- Increasing the distance from electrical facilities by:
  - Increasing structure height or trench depth
  - Locating power lines closer to the centerline of the corridor
- Reducing conductor (phase) spacing; and
- Phasing circuits to reduce magnetic fields.

Final engineering of pole locations and pole spacing would include seeking opportunities to strategically reduce EMF through implementation of the measures listed above.

4.16. Alternatives

The purpose of an alternatives analysis pursuant to CEQA is to identify options that would feasibly attain the project's objectives while reducing the significant environmental impacts resulting from the proposed Project. CEQA does not require the inclusion of an alternatives analysis in a Mitigated Negative Declaration because the Initial Study concluded that, with incorporation of mitigation measures, there would be no significant adverse impacts resulting from the proposed Project (CEQA Guidelines Sections 15063(d) and 15071). Therefore, no alternatives analysis is provided.

However, in developing the proposed Project, SVP did consider multiple possible route alternatives and options in the project area that would achieve the project objectives. The proposed Project was chosen for the following reasons:

1. the chosen route options have good reliability from an operational and power delivery perspective;
2. the selected route options best meet the objectives of the project, including schedule considerations, by transferring the power flow from the various substations to the desired transmission line circuit(s);
3. the chosen route options have fewer engineering design challenges and fewer permitting challenges than the other possible routes; and
4. the route options provide the best solutions for avoiding construction that is outside of City ROW, near the San Jose International Airport or along the railroad ROW.

5. ENVIRONMENTAL ANALYSIS

5.1. Aesthetics

AESTHETICS **Except as provided in Public Resources Code Section 21099, would the project:**	Potentially Significant Impact	Less Than Significant With Mitigation Incorporated	Less Than Significant Impact	No Impact
(a) Have a substantial adverse effect on a scenic vista?	☐	☐	☒	☐
(b) Substantially damage scenic resources, including, but not limited to, trees, rock outcroppings, and historic buildings within a State scenic highway?	☐	☐	☐	☒
(c) In non-urbanized areas, substantially degrade the existing visual character or quality of public views of the site and its surroundings? (Public views are those that are experienced from publicly accessible vantage point). If the project is in an urbanized area, would the project conflict with applicable zoning and other regulations governing scenic quality?	☐	☐	☒	☐
(d) Create a new source of substantial light or glare which would adversely affect day or nighttime views in the area?	☐	☐	☒	☐

Significance criteria established by CEQA Guidelines, Appendix G.

5.1.1. Setting

The evaluation of aesthetics under CEQA considers the visual aspects of a project and how they affect the visible environment in which they are proposed to be placed. This aesthetics section describes the existing visual character of the Project area, the visual characteristics of the proposed Project, and the visual changes that would be associated with the construction and operation of the Project.

Regional Context. The Project would install an approximately 2.24-mile-long transmission line in the City of Santa Clara. The line would extend from SVP's Northern Receiving Station (NRS) on Centennial Boulevard southeast of Levi's Stadium to SVP's Kifer Receiving Station (KRS) on Lafayette Street between the Bayshore Freeway (US 101) and the Central Expressway. The majority of the route would be along Lafayette Street and Bassett Street except where it approaches KRS, where the alignment would cross over Hwy 101 to reach KRS on the south side of the freeway. Two options are being considered for the line. Under Option 1 the line would be entirely overhead on tubular steel poles. Under Option 2, the line would be underground for 0.74 miles, from NRS south to Agnew Road, where it would return to aboveground and continue to KRS on tubular steel poles. The only difference in the options is on Lafayette Street between NRS and Agnew Road, where the alignment would be either overhead or underground. South of Agnew Road the alignment would be overhead under both options.

5.1.1.1. Methodology

Visual or aesthetic resources are the visible natural and cultural features that contribute to the public's enjoyment of the viewed environment. Visual or aesthetic impacts are generally defined in terms of a project's physical characteristics and potential visibility and the extent that the project's presence would change the visual character and quality of the environment in which it would be located.

Visual resources at and near the Project site and potential visual changes due to project activities were evaluated. Visual resources of the project area were investigated based on the following criteria: (1) existing visual quality and scenic attributes of the landscape; (2) location of sensitive receptors in the landscape; (3) assumptions about receptors' concern for scenery and sensitivity to changes in the landscape; (4) the magnitude of visual changes in the landscape that would be brought about by construction and operation of

the proposed Project; (5) the extent to which changes would be visible and the duration of views, and (6) compliance with State, County, and local policies for visual resources. The evaluation of potential changes in the area's visual character is presented below.

5.1.1.2. Existing Landscape Setting and Viewer Characteristics

This section discusses the existing visual character of the region, existing visual quality in the Project area, and viewer concern and exposure to the proposed Project, leading to a rating of overall visual sensitivity. Also discussed are the existing sources of light and glare within the project area.

Aesthetic Context of the Project and Vicinity. Viewers of the Project would be primarily motorists on Lafayette Street, workers and patrons at commercial and light industrial facilities along the street, and residences fronting on Lafayette Street.

As shown in Figure 4-1, the proposed Project would be located at existing substation properties and along an existing road network in an urbanized area of the City. The figure also shows other existing transmission lines in the area. The project vicinity is highly developed, with primarily residential properties (apartments and townhouses) along the northern end of the alignment and primarily commercial and light industrial properties along the southern end of the alignment.

The Project originates at NRS. Levi's Stadium and tall tubular steel transmission towers are dominant visual features at and around NRS. The upper portions of existing poles and other structures within NRS are visible behind a surrounding wall. The NRS is bounded on the north by a fence and landscaping separating it from the San Francisco 49ers training facilities and Levi's Stadium. On the west side of NRS is a fence, a parking lot with storage facilities, water tanks, and San Tomas Aquino Creek. To the east, the NRS site is within a masonry wall with a parking area outside of the wall. A rail line, Lafayette Street, and residences are farther east, with the housing approximately 225 feet from the substation wall. On the south side of NRS is a masonry wall, with an 80-foot underground water utility right-of-way separating the NRS wall and the rear of residences on Gianera Street. The residences to the east and south face away from the NRS, with access by way of interior roads.

The transmission line from NRS would extend south along Lafayette Street, which is 4 lanes wide with a median divider and a fenced rail line on its west side. Figure 5.1-1 shows the view looking north from near an existing pole outside of the wall surrounding NRS. The slightly elevated rail line is fenced off, and an existing tubular steel pole located on the east side of Lafayette Street is visible in the center of the image. Overhead street lighting on tubular poles is also located along the east and west sides of the street. At controlled intersections, arms supporting traffic signals and street signs are free standing or extend from the light standards. Just south of NRS, the rail line and Lafayette Street are separated from residences to the west by existing vegetation and an approximately 12-foot-high wall. Figure 5.1-2 shows the wall separating the rail line and Lafayette Street from the residences west of the Project alignment in this area. This barrier extends approximately 0.5 miles from NRS to 2nd Street near Agnew Road. On the east side of Lafayette Street are residential areas that primarily back on the street and are separated from the street by fencing and vegetation. Existing wooden poles on the east side of Lafayette Street between NRS and Hogan Street support a distribution line and underbuilt communication lines on wooden poles. At Hogan Street the distribution line transitions to underground and the communication lines continue for another approximately 300 feet. At Payne Lane, the distribution line emerges from underground and continues south on wooden poles on the east side of the street. Between NRS and Eisenhower Street most residences along the east side of Lafayette Street do not front on the street; their rear or side yards face Lafayette Street. South of Hope Drive the existing distribution line again transitions underground. Nearing Agnew Road, multi-story apartment and condominium buildings face Lafayette Street on the east side of the street but are set back approximately 30 feet from the curb, ~~often~~ with trees or other landscaping between the buildings and the street. At Agnew Road and Lafayette Street, existing overhead lines enter

and exit Palm Substation on two existing tubular steel poles. The substation is surrounded by a concrete block wall. South from the substation, the existing transmission lines continue on tall wooden poles on both sides of Lafayette Street, continuing over Montague Expressway and leading to the KRS. Commercial land uses are also intermixed on the east side of Lafayette Street south of Agnew Road.

Under Option 1, tubular steel poles would be installed in the median of Lafayette Street, from NRS to the intersection of Lafayette Street and Agnew Road. After this point, the transmission line would transition to the east side of Lafayette Street and enter Bassett Street and continue south.

Under Option 2, the alignment would begin overhead at NRS to the median of Lafayette Street where it would transition underground in the median of Lafayette Street continuing south to the intersection of Lafayette Street and Agnew Road. The alignment would transition to overhead just south of the intersection of Lafayette Street and Agnew Road, on the east side, then continue overhead to KRS. The underground duct bank for the transmission line would be at least 6 feet below grade at the top of the duct bank. It would be constructed using cut and cover techniques, with the duct work constructed in an open trench and then covered and the ground surface restored to its previous condition. Vaults to provide access to the ducts would be located along its length. In some locations, such as south of the intersection of Lafayette Street and Agnew Road, existing lower voltage circuits would be attached to the new NRS-KRS poles and existing poles would be removed.

Figure 5.1-3 illustrates the placement of poles in the median of Lafayette Street under Option 1. Typical distance between poles is approximately 350 feet, depending on final engineering. The poles would be approximately 85 to 150 feet tall. Tangent structures supporting the line would be generally 2 feet to 4 feet in diameter, while dead-end poles would be 4 feet to 6 feet in diameter. The bird's eye view in Figure 5.1-3 if looking north from near Hope Drive at Lafayette Street toward NRS and Levi's Stadium and illustrates how the 115 kV poles would appear in the existing urban setting. In some locations, such as south of the intersection of Lafayette Street and Agnew Road, existing lower voltage circuits would be attached to the new NRS-KRS poles and some existing poles would be removed. The poles to be removed would be determined during final engineering. As shown in Figure 5.1-3, many of the residences on the west side of Lafayette Street are screened from the street by an existing wall separating them from the rail line. On the east side of the street, the majority of residents along the street would have views of the poles from their side or rear windows. The final positioning of poles (approximately 300 feet apart) would determine which units would be facing a pole.

For both Option 1 and Option 2, the remainder of the line would be built overhead. South of Agnew Road, the overhead line would be located on the east side of Lafayette Street. To the east is Agnews Historic Park and associated office uses set back from the road, with most of the area closest to Lafayette Street used for parking. To the west, Lafayette Street is separated from residences by the rail line, a sparsely vegetated open area, and a local street parallel to Lafayette Street. These residences are approximately 200 feet from the Lafayette Street median.

The alignment continues on the east side of Lafayette Street until it is just north of the Montague Expressway, where it would transition to the west side of Lafayette Street and cross over the expressway on taller poles and continue on the west side of Bassett Street and the rail line, extending south along Bassett Street, which parallels Lafayette at this location. Figure 5.1-4 is an image from Bassett Street looking north. The rail line, with Lafayette Street beyond are visible through the overpass supports. Along Bassett Street to the west are commercial or light industrial uses. To the east, on the east side of Lafayette Street is a mix of residential, commercial and light industrial uses. Bassett Street and the transmission line turn south through an area of commercial and light industrial uses before the transmission line crosses over US 101 (Bayshore Freeway) and enters KRS.

The proposed Project is not located in an area designated as a protected scenic resource and is therefore not subject to scenic protection standards. In addition, the proposed site is not located near an officially designated scenic highway (Caltrans, 2021).

Existing Views in the Project area. Potential views of the proposed Project are often limited by the existing structures, walls, and vegetation along the alignment. The most prominent views would be to motorists on Lafayette Street. NRS and KRS are behind screening walls and set back from nearby roads. These facilities are already visual elements of the local viewscape, as is the rail line and the existing transmission lines, communication lines, street lighting, and traffic signals found along the route. The few additional poles and structures needed between the NRS and KRS facilities to accommodate the transmission line would be consistent with, and similar to those poles and structures already in place. However, with the overhead option, the tall tubular steel poles would be in the street median for much of the route. Distant views of the proposed transmission line itself would be limited by the presence of buildings and vegetation which would screen views from most locations perpendicular to the alignment. (In particular, see Figures 5.1-2 and 5.1-3). The visual complexity of this urban setting includes transportation infrastructure (roads and a rail line), vertical elements (existing poles, lighting, traffic signals, and signs), and buildings. Motorists on Lafayette Street would view the new poles in the context of a developed complex urban environment, and their experience would be fleeting as they drive. For residences fronting on Lafayette Street, the poles and conductor would be a more prominent visual experience, but the poles would be widely spaced with conductors relatively high (lowest conductor is 60+ feet in this area) and would not represent a substantial change in the existing urban visual context. In most cases the poles would be only visible to motorists and pedestrians on Lafayette Street and to residents with views out their rear or side windows.

Figure 5.1-1. View Near NRS looking North

Figure 5.1-1

View Near NRS looking North

Figure 5.1-2. Wall Separating Residences and Lafayette Street

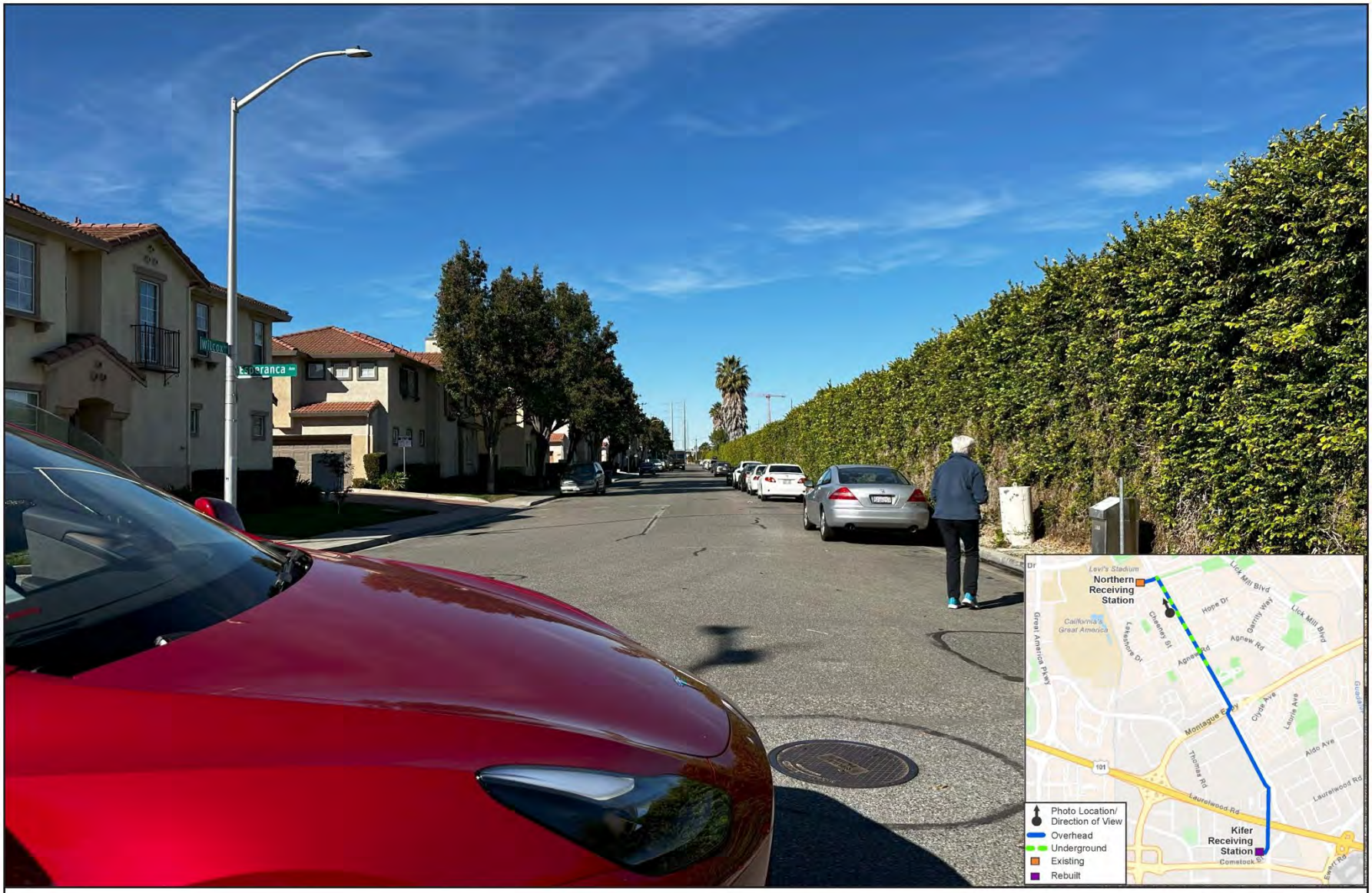

Figure 5.1-2

Wall Separating Residences and Lafayette Street

Figure 5.1-3. Bird's Eye Illustration of Project Poles on Lafayette Street

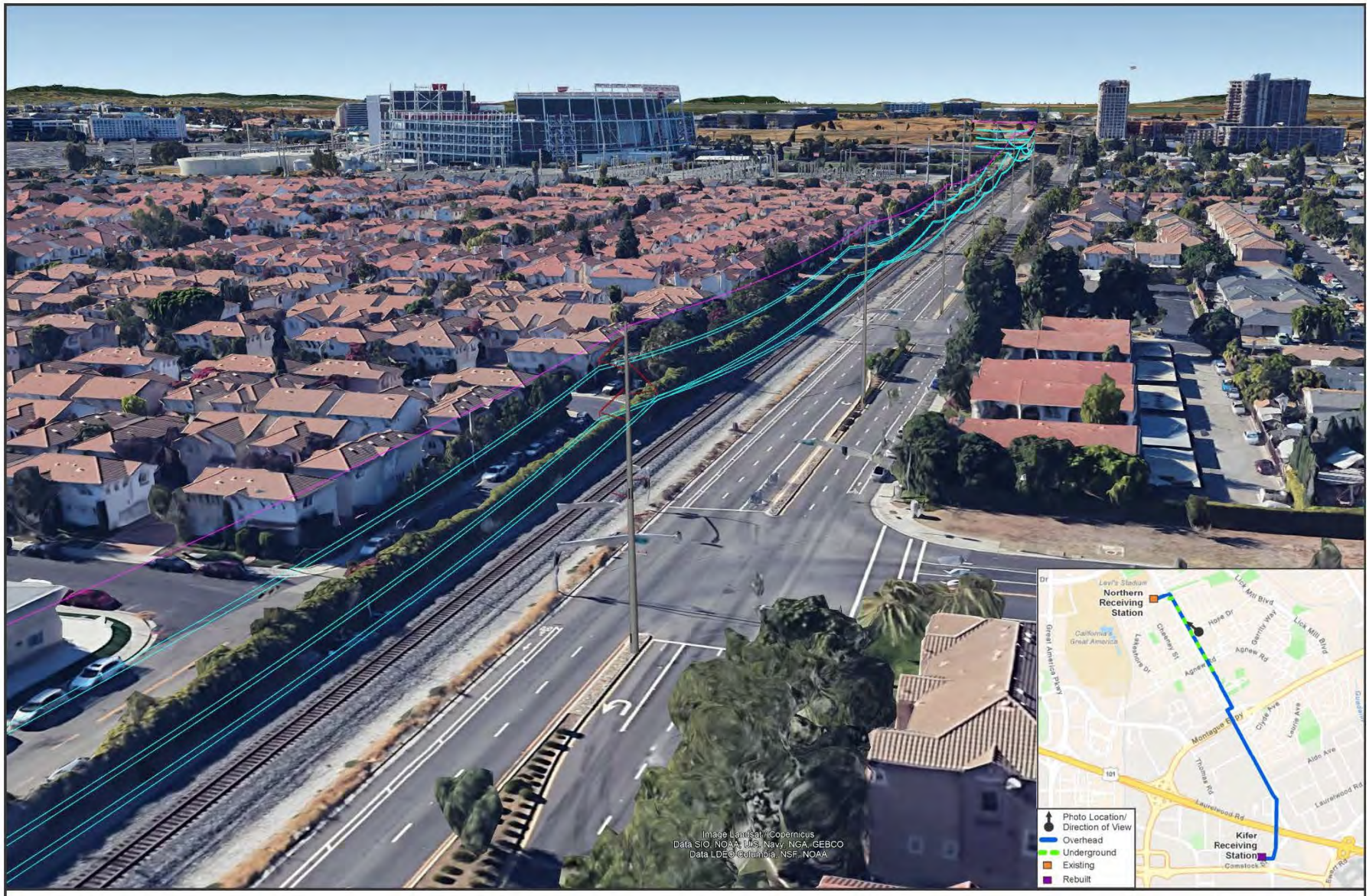

Figure 5.1-3

Bird's Eye Illustration of Project Poles on Lafayette Street

Figure 5.1-4. View from Bassett Street of Crossing at Montague Expressway

Figure 5.1-4

View from Bassett Street of Crossing at Montague Expressway

Regulatory Background

This section includes a description of the aesthetic resources' regulatory framework. There are no federal or state regulations or policies related to aesthetic resources applicable to the Project.

Local

City of Santa Clara General Plan. The City's land use policies consider the effects of development to public facilities and infrastructure. The following policies in the General Plan generally relate to the proposed Project (City of Santa Clara, 2014):

- **Policy 5.3.1-P27.** Encourage screening of above-ground utility equipment to minimize visual impacts.
- **Policy 5.3.1-P28.** Encourage undergrounding of new utility lines and utility equipment throughout the City.
- **Policy 5.3.1-P29.** Encourage design of new development to be compatible with, and sensitive to, nearby existing and planned development, consistent with other applicable General Plan policies.

5.1.2. Environmental Impacts and Mitigation Measures

Visual Impact Assessment Methodology

This visual analysis considered visual sensitivity and visual change to assess the visual effects of the proposed Project on the existing urban landscape. This approach includes a characterization of the visual sensitivity of the existing landscape, the characteristics of existing visual changes occurring and apparent in the landscape, and the characteristics of the proposed Project.

Visual sensitivity consists of three components: visual quality, viewer concern, and viewer exposure. Visual quality notes the existing built structures and natural landscape features that contribute to overall visual quality. Viewer concern can be described as the personal expectations for the landscape that are held by the viewing public. Viewer exposure also affects a landscape's overall visual sensitivity. Landscapes that have very low viewer exposure, based on visibility, viewing distance, number of people who view the landscape, or duration of time that the landscape can be viewed, will tend to be less sensitive to overall visual change. Landscapes with higher viewer exposure are more sensitive to overall visual changes. Overall visual sensitivity can be rated as Low, Moderate, or High.

Project-induced **visual change** could result from aboveground facilities, vegetation removal, component size or scale relative to existing landscape characteristics, and the placement of project components relative to existing developed features. Visual change can also be affected by the degree of available screening by vegetation, landforms, and/or structures; distance from the observers; atmospheric conditions; and angle of view. Visual change describes the degree of actual visible change introduced by a project. The fundamental elements of visual change include visual contrast, visual dominance, and scenic view obstruction. Components of visual change include contract, dominance, and obstruction. Visual contrast refers to visual discrepancies of form, line, color, or texture of a project against the existing landscape. Visual dominance refers to the degree to which this contrast would demand the attention of casual viewers. Scenic view obstruction refers to the degree to which the project would block or intrude upon scenic view corridors, particularly those identified in public policies. Overall visual change is rated on a scale of Low, or Moderate, or High.

Given the highly developed and complex visual environment within which the Project would occur, the visual sensitivity along the alignment is considered low to moderate. The spacing of visual elements (poles), the limited duration of views by motorists, and the limited number of views from residences results in the visual change being low to moderate.

In addition, the Project is evaluated for conformance with applicable local plans and policies. Adopted expressions of local public policy pertaining to visual resources are given great weight in determining both visual quality and viewer concern.

The determination of which aesthetic changes cross a threshold of "substantial adverse effect" or degradation is based upon the criteria described above and in Table 5.1-1, Visual Impact Significance Criteria. This table was used primarily as a consistency check, as determinations of visual sensitivity and visual change were based primarily on analyst experience and site-specific circumstances.

Implicit in this rating methodology is the acknowledgment that for a visual impact to be considered significant two conditions generally exist: (1) the existing landscape is of reasonably high quality and is relatively valued by viewers; and (2) the perceived incompatibility of one or more elements or characteristics of the project tends toward the high extreme, leading to a substantial reduction in visual quality.

Table 5.1-1. Visual Impact Significance Criteria

Visual Sensitivity	Visual Change				
	Low	**Low to Moderate**	**Moderate**	**Moderate to High**	**High**
Low	No impact[1]	No impact	Less Than Significant[2]	Less Than Significant	Less Than Significant
Low to Moderate	No impact	Less Than Significant	Less Than Significant	Less Than Significant	Less Than Significant with Mitigation Incorporated[3]
Moderate	Less Than Significant	Less Than Significant	Less Than Significant	Less Than Significant with Mitigation Incorporated	Less Than Significant with Mitigation Incorporated
Moderate to High	Less Than Significant	Less Than Significant	Less Than Significant with Mitigation Incorporated	Less Than Significant with Mitigation Incorporated	Potentially Significant Impact[4]
High	Less Than Significant	Less Than Significant with Mitigation Incorporated	Less Than Significant with Mitigation Incorporated	Potentially Significant Impact[4]	Potentially Significant Impact

1 No Impact – Impacts may or may not be perceptible but are considered minor in the context of existing landscape characteristics and view opportunity.
2 Less Than Significant – Impacts are perceived as negative but do not exceed environmental thresholds.
3 Less Than Significant with Mitigation Incorporated – Impacts are perceived as negative and may exceed environmental thresholds depending on project and site-specific circumstances but are Less Than Significant with mitigation incorporated.
4 Potentially Significant Impact – Impacts with feasible mitigation may be reduced to levels that are not significant or avoided all together. Without mitigation, significant impacts would exceed environmental thresholds.

Aesthetics Impacts

(a) Would the project have a substantial adverse effect on a scenic vista?

LESS THAN SIGNIFICANT IMPACT. The flat topography and developed character of this part of the City does not provide scenic vistas, which typically are views of open spaces or views from elevated topographic positions. The nearest mountains or areas of high elevation that would provide panoramic views that could include the Project site are over 5 miles away. Views from these locations would overlook the highly developed urban landscape, within which the transmission line would be indiscernible among the buildings, trees, and existing power lines in the city. The project elements are consistent with the visual character of a highly developed urban area and are similar in nature to existing transmission infrastructure in the

City, which results in a low level of visual change to the Project would therefore result in a less than significant impact to a scenic vista.

(b) Would the project substantially damage scenic resources, including, but not limited to, trees, rock outcroppings, and historic buildings within a State scenic highway?

NO IMPACT. The proposed Project would require vegetation and limited tree removal or trimming. The Project site is not near or visible from a scenic highway. Based on these conditions, there would be no impacts to scenic resources within a State scenic highway.

(c) In non-urbanized areas, would the project substantially degrade the existing visual character or quality of the public views of the site and its surroundings? (Public views are those that are experienced from publicly accessible vantage point). If the project is in an urbanized area, would the project conflict with applicable zoning and other regulations governing scenic quality?

LESS THAN SIGNIFICANT. The Project is in a highly urbanized area with primarily residential, light industrial, and low intensity office/R&D land uses, as defined in the City's General Plan. The transmission line alignment would follow existing roads and a rail line.

In the short term, the presence of equipment and vehicles may be noticeable to the nearby residences, businesses, and persons using local roads. However, construction activities would be temporary.

Some tree removal or trimming overhanging vegetation may be required to accommodate the Project and comply with safety requirements. During the final Project development processes, in consultation with the City arborist or City-designated arborist, it would be determined what specific trees may need to be removed for the Project or that with special protection measures are needed, such as by adjusting a pole location, to avoid a tree removal. Initial evaluation indicates that for Option 1 (Overhead), an estimated 2 trees would need to be removed and 33 trees pruned. Under Option 2 (Partial Underground), an estimated 2 trees may need to be removed and 32 trees pruned. SVP consults with the City arborist to determine whether trees need to be replaced and where any replacements would be located. Vegetation removal and trimming would not be a significant change within the overall landscape, due to the highly urbanized character of area, which is dominated by buildings, infrastructure, and roadways.

The proposed Project would be consistent with applicable zoning, regulations and the applicable policies of the City of Santa Clara General Plan, as noted in Section 5.1.1 and in Section 5.11 (Land Use); thus, the impact would be less than significant.

(d) Would the project create a new source of substantial light or glare which would adversely affect day or nighttime views in the area?

LESS THAN SIGNIFICANT. Construction activities would occur during daylight hours and would not include nighttime work that would necessitate the use of lighting within work areas. The surfaces of new structures and enclosures would be non-reflective and would not create glare. This would include poles, conductors, and any required ancillary equipment such as transformers or switchgears. The substations are existing facilities with existing lighting. The streets along the alignment have existing street lighting and adjacent buildings have private residential and commercial lighting.

There is existing lighting from the residential, commercial, and industrial developments along the project alignment. No new lighting is expected to be required by the Project. However, if new lighting were required due to the Project's proximity to the airport, it would occur in the vicinity of the KRS, extending north of Bayshore Freeway. This lighting would be minimal and would be intended to be viewed from an airplane for safety reasons. The visual change would be low, because of existing sources of light in the area, and it would not create a new source of substantial light. Final required lighting would be subject to final design and FAA review. If required during construction, any lighting would be minimal and would not adversely affect the day or nighttime views in the area for an extended period, therefore, the impact would be less than significant.

5.2. Agriculture and Forestry Resources

AGRICULTURE AND FORESTRY RESOURCES In determining whether impacts to agricultural resources are significant environmental effects, lead agencies may refer to the California Agricultural Land Evaluation and Site Assessment Model (1997) pre-pared by the California Department of Conservation as an optional model to use in assessing impacts on agriculture and farmland. In determining whether impacts to forest resources, including timberland, are significant environmental effects, lead agencies may refer to information compiled by the California Department of Forestry and Fire Protection regarding the state's inventory of forest land, including the Forest and Range Assessment Project and the Forest Legacy Assessment Project; and forest carbon measurement methodology provided in Forest Protocols adopted by the California Air Resources Board. **Would the project:**	**Potentially Significant Impact**	**Less Than Significant With Mitigation Incorporated**	**Less Than Significant Impact**	**No Impact**
(a) Convert Prime Farmland, Unique Farmland, or Farmland of Statewide Importance (Farmland), as shown on the maps prepared pursuant to the Farmland Mapping and Monitoring Program of the California Resources Agency, to non-agricultural use?	☐	☐	☐	☒
(b) Conflict with existing zoning for agricultural use, or a Williamson Act contract?	☐	☐	☐	☒
(c) Conflict with existing zoning for, or cause rezoning of, forest land (as defined in Public Resources Code §12220(g)), timberland (as defined by Public Resources Code §4526), or timberland zoned Timberland Production (as defined by Government Code §51104(g))?	☐	☐	☐	☒
(d) Result in the loss of forest land or conversion of forest land to non-forest use?	☐	☐	☐	☒
(e) Involve other changes in the existing environment which, due to their location or nature, could result in conversion of Farmland, to non-agricultural use or conversion of forest land to non-forest use?	☐	☐	☐	☒

Significance criteria established by CEQA Guidelines, Appendix G.

5.2.1. Setting

The proposed Project is located in a fully developed area and there is no agricultural activity or forestry resources along the proposed Project transmission line route and substations. The project area is not zoned for agricultural or forestry uses, nor is there agricultural or forestry activity in the vicinity of the proposed route (City of Santa Clara, 2014). The surrounding lands are designated as Urban and Built-Up Land under the California Department of Conservation (DOC) Farmland Mapping and Monitoring Program (FMMP), which identifies various categories of farmland throughout the State (DOC, 2022).

The properties in the areas along the proposed Project route are not under California Land Conservation Act of 1965 (referred to as the Williamson Act) contracts (DOC, 2017).

Regulatory Background

This section includes a description of the agriculture and forestry resources regulatory framework. There are no federal or local regulations associated with agriculture and forestry resources that are relevant to the proposed Project.

State

Farmland Mapping and Monitoring Program (FMMP). The FMMP was established in 1982 to identify various categories of farmland throughout California and to assess the location, quantity, and quality of agricultural lands and conversion of these lands to other uses. Every even-numbered year, FMMP issues a Farmland Conversion Report. FMMP data are used in elements of some county and city general plans, in regional studies on agricultural land conversion, and in environmental documents as a way of assessing project-specific impacts on Prime Farmland.

The DOC classifies lands as follows (DOC, 2016):

- **Prime Farmland:** Land that has the best combination of physical and chemical properties for the production of crops
- **Farmland of Statewide Importance:** Similar to Prime Farmland, but with minor shortcomings (e.g., steeper slopes, inability to hold water)
- **Unique Farmland:** Land of lesser quality soils, but recently used for the production of specific high economic value crops. Land is usually irrigated, but may include non-irrigated orchards or vineyards as found in some climatic zones in California
- **Farmland of Local Importance:** Land essential to the local agricultural economy
- **Grazing Land:** Land on which existing vegetation is suitable for livestock grazing.
- **Urban and Built-Up Land:** Land that is occupied by buildings or other structures at a minimum density of one unit to 1.5 acres (or approximately six structures to 10 acres). These lands are used for development purposes, including residential, commercial, industrial, construction, public administration, institutional, transportation yards, airports, cemeteries, golf courses, sewage treatment, sanitary landfills, and water control structures.
- **Other Land:** Land that is not in any other map category, such as waterbodies smaller than 40 acres; low density rural developments; confined livestock, poultry, or aquaculture facilities; and brush, timber, wetland, and riparian areas not suitable for livestock grazing.
- **Water:** Perennial waterbodies that are a minimum of 40 acres.

Williamson Act. The Williamson Act is intended to help preserve farmland by allowing counties to enter into contracts with private landowners for the purpose of restricting specific parcels of land to agricultural or related open space use in return for a reduction in assessed property taxes. The contracted land is then restricted to agricultural and compatible uses through a rolling-term, 10-year contract between the private landowner and the local government, which has the discretion to determine uses compatible with Williamson Act enrollment. As stated in Section 51222 of the California Government Code, the minimum acreage requirement for individual parcels to enter into Williamson Act contracts is 100 acres.

5.2.2. Environmental Impacts and Mitigation Measures

(a) Would the project convert Prime Farmland, Unique Farmland, or Farmland of Statewide Importance (Farmland), as Shown on the Maps Prepared Pursuant to the Farmland Mapping and Monitoring Program of the California Resources Agency, to Non-agricultural use?

NO IMPACT. The proposed Project route and the land in the project vicinity are designated as Urban and Built-Up Land on the FMMP maps and are not designated Farmland. Agriculture is not practiced in the area. The proposed Project would not result in conversion of Farmland to non-agricultural use.

(b) Would the project conflict with existing zoning for agricultural use, or a Williamson Act contract?

The minimum acreage requirement for individual parcels to enter into Williamson Act contracts, as stated in Section 51222 of the California Government Code, is 10 acres. In addition, State CEQA Guidelines, Section 15206 does not regard the cancellation of less than 100 acres of land from Williamson Act to be of statewide, regional, or areawide significance.[4]

NO IMPACT. The City of Santa Clara does not participate in the Williamson Act. There is no designated zoning for agricultural use, and the City of Santa Clara General Plan does not include an Agriculture Element. The proposed Project route would not conflict with zoning for agricultural use.

(c) Would the project conflict with existing zoning for, or cause rezoning of, forest land (as defined in Public Resources Code section 12220(g)), timberland (as defined by Public Resources Code section 4526), or timberland zoned Timberland Production (as defined by Government Code section 51104(g))?

NO IMPACT. The proposed Project route is in an urban area and is not forested. The proposed Project would not conflict with zoning for forest land, timberland, or timber production.

(d) Would the project result in the loss of forest land or conversion of forest land to non-forest use?

NO IMPACT. The proposed Project would not affect any forest land since the proposed route is located in an urban area that is not forested. There would be no conversion of forest land to non-forest use.

(e) Would the project involve other changes in the existing environment, which, due to their location or nature, could result in conversion of Farmland to non-agricultural use?

NO IMPACT. There is no Farmland, agriculture, or forestland along or near the proposed Project route. The proposed Project would not result in changes in the environment that would result in the conversion to non-agricultural or non-forest uses.

[4] Section 15206(b)(3) states that projects of statewide, regional, or areawide significance include, "[a] project which would result in the cancellation of an open space contract made pursuant to the California Land Conservation Act of 1965 (Williamson Act) for any parcel of 100 or more acres."

5.3. Air Quality

AIR QUALITY Where available, the significance criteria established by the applicable air quality management district or air pollution control district may be relied upon to make the following determinations. **Would the project:**	Potentially Significant Impact	Less Than Significant With Mitigation Incorporated	Less Than Significant Impact	No Impact
(a) Conflict with or obstruct implementation of the applicable air quality plan?	☐	☐	☒	☐
(b) Result in a cumulatively considerable net increase of any criteria pollutant for which the project region is non-attainment under an applicable Federal or State ambient air quality standard?	☐	☒	☐	☐
(c) Expose sensitive receptors to substantial pollutant concentrations?	☐	☒	☐	☐
(d) Result in other emissions (such as those leading to odors) adversely affecting a substantial number of people?	☐	☐	☒	☐

Significance criteria established by CEQA Guidelines, Appendix G.

5.3.1. Setting

Criteria Pollutants. Air quality is determined by measuring ambient concentrations of criteria pollutants. Air pollutants are those pollutants for which acceptable levels of exposure can be determined and for which standards have been set. The degree of air quality degradation is then compared to the current National and California Ambient Air Quality Standards (NAAQS and CAAQS). Unique meteorological conditions in California and differences of opinion by medical panels established by the California Air Resources Board (CARB) and the U.S. Environmental Protection Agency (U.S. EPA) cause considerable diversity between State and Federal standards currently in effect in California. In general, the CAAQS are more stringent than the corresponding NAAQS. The standards currently in effect in California are shown in Table 5.3-1.

Table 5.3-1. National and California Ambient Air Quality Standards

Pollutant	Averaging Time	California Standards	National Standards
Ozone	1 hour	0.09 ppm	—
	8 hour	0.070 ppm	0.075 ppm
Respirable Particulate Matter (PM_{10})	24 hour	50 µg/m^3	150 µg/m^3
	Annual Mean	20 µg/m^3	—
Fine Particulate Matter ($PM_{2.5}$)	24 hour	—	35 µg/m^3
	Annual Mean	12 µg/m^3	15 µg/m^3
Carbon Monoxide (CO)	1 hour	20 ppm	35 ppm
	8 hour	9.0 ppm	9.0 ppm
Nitrogen Dioxide (NO_2)	1 hour	0.18 ppm	—
	Annual Mean	0.030 ppm	0.053 ppm
Sulfur Dioxide (SO_2)	1 hour	0.25 ppm	—
	24 hour	0.04 ppm	0.14 ppm
	3 hour	—	0.5 ppm
	Annual Mean	—	0.03 ppm

Notes: ppm=parts per million; µg/m3= micrograms per cubic meter; "—" =no standard
Source: CARB (http://www.arb.ca.gov/research/aaqs/aaqs2.pdf), November, 2016.

Table 5.3-2. Attainment Status for San Francisco Bay Area

Pollutant	California Designation	Federal Designation
Ozone (1 hour)	Nonattainment	Nonattainment
Ozone (8 hour)	Nonattainment	Unclassified/Attainment
PM_{10}	Nonattainment	Nonattainment
$PM_{2.5}$	Attainment	Attainment
CO	Attainment	Unclassified/Attainment
NO_2	Attainment	Unclassified/Attainment
SO_2	California Designation	Federal Designation

Source: BAAQMD, 2023.

Attainment Status and Air Quality Plans. The U.S. EPA, Air Resources Board (ARB), and the local air district classify an area as attainment, unclassified, or nonattainment of a pollutant, and these designations dictate the air quality management planning activities needed make future air pollutant reductions. The classification depends on whether the monitored ambient air quality data show compliance, insufficient data available, or noncompliance with the ambient air quality standards, respectively. Table 5.3-2 summarizes attainment status in the San Francisco Bay Area air basin for the criteria pollutants under both the state and federal standards.

Regulatory Background

U.S. EPA/CARB Off-Road Mobile Sources Emission Reduction Program. The California Clean Air Act mandates that CARB achieve the maximum degree of emission reductions from all off-road mobile sources in order to attain the state ambient air quality standards. Off-road mobile sources include construction equipment. Tier 1 standards for large compression-ignition engines used in off-road mobile sources went into effect in California in 1996. These standards and ongoing rulemaking jointly address emissions of nitrogen oxides (NOx) and toxic particulate matter from diesel combustion. CARB is also developing a control measure to reduce diesel particulate matter emissions as well as NOx from in-use (existing) off-road diesel equipment throughout the State.

CARB Portable Equipment Registration Program. This program allows owners or operators of portable engines and associated equipment commonly used for construction or farming to register their units under a statewide portable program that allows them to operate their equipment throughout California without having to obtain individual permits from local air districts.

BAAQMD CEQA Guidelines Thresholds of Significance. The Bay Area Air Quality Management District (BAAQMD) provides the following thresholds as recommendations for use by lead agencies in the CEQA process. For construction-related criteria air pollutant emissions, construction of a project may cause a significant impact if it would:

- Emit more than 54 pounds per day (lbs/day) of reactive organic gases (ROG) or volatile organic compounds (VOC);
- Emit more than 54 lbs/day of nitrogen oxides (NOx);
- Emit more than 82 lbs/day of PM10 from exhaust; or
- Emit more than 54 lbs/day of PM2.5 from exhaust.

Similar thresholds exist for a project during operation along with a threshold for localized concentrations of CO greater than 9 ppm (8-hour average) or 20 ppm (1 hour average). For PM10 and PM2.5 related to fugitive dust during construction, the BAAQMD recommends that each project should include best management practices rather than achieve specific fugitive dust emissions thresholds. The basic construction emissions control measures appear in the BAAQMD CEQA Guidelines (BAAQMD, 2023).

5.3.2. Environmental Impacts and Mitigation Measures

(a) Would the project conflict with or obstruct implementation of the applicable air quality plan?

LESS THAN SIGNIFICANT – CONSTRUCTION. The BAAQMD is the primary agency responsible for managing local air quality and administering other California and federal programs ensuring implementation of the air quality management plan. The 2017 Bay Area Clean Air Plan is the BAAQMD's current plan to achieve state and national ambient air quality standards, comply with California and federal air quality planning requirements, and maintain healthy air in the San Francisco Bay Area.

The BAAQMD recommends evaluating whether local long-range plans: (a) support the primary goals of the 2017 Clean Air Plan; (b) include relevant control measures; and (c) do not interfere with implementation of 2017 Clean Air Plan control measures. The BAAQMD's 2017 Clean Air Plan anticipates that electricity consumption and demand for electricity will increase as a result of economic and demographic growth and due to increased electrification caused by shifting energy demand away from fossil fuels. The proposed Project would increase SVP's system capacity and reliability and allow SVP to serve projected load growth. By improving the delivery of electricity to the transmission system, the Project would support the primary goals of the 2017 Clean Air Plan and increased electrification of energy demands. No control measures from the plan would be directly applicable to the Project, and the Project would not disrupt or hinder implementation of any plan control measures.

A Project could be found inconsistent with the applicable air quality management plan or attainment plan if it could cause population and/or employment growth or growth in vehicle-miles traveled in excess of the growth forecasts included in the air quality attainment plan. SVP's existing operations and maintenance group would assume inspection, patrol, and maintenance duties as needed. No additional staff would be required after project construction work is completed. Therefore, the Project would not conflict with or obstruct implementation of the applicable air quality plan. No impact would occur, and no mitigation is required.

LESS THAN SIGNIFICANT – OPERATIONS AND MAINTENANCE. Operational emissions would be limited to the vehicle and equipment used for periodic maintenance, repair, and inspection of the proposed Project. No additional operations staff would be hired by SVP as a result of the Project being put into service. Since the Project is unstaffed, operational activities would not result in any net increase in mobile source emissions due to workers or staff maintaining the facility, and no new stationary sources are proposed. As a result, operation of the proposed Project would not result in a cumulatively considerable net increase of any criteria pollutant. This impact would be less than significant, and no mitigation would be required during operations.

(b) Would the project result in a cumulatively considerable net increase of any criteria pollutant for which the project region is non-attainment under an applicable Federal or State ambient air quality standard?

LESS THAN SIGNIFICANT WITH MITIGATION - CONSTRUCTION. Construction of the proposed Project would include foundation excavation, power pole assembly and installation, and installation of travelers for the overhead transmission line construction option, and would include trenching, and vault installation for the underground option. These activities during construction would generate emissions at the work area and along the roadways used to access the site.

Construction emissions would be caused by exhaust from vehicles and equipment (e.g., ozone precursor VOC and NOx, CO, PM10 and PM2.5) and fugitive dust that includes particulate matter from ground-disturbing activities. The mobile sources would include diesel-powered construction equipment such as cranes, lifts, loaders, an auger drill rig, and rollers, as well as small welders. Other mobile sources would include diesel and gasoline-powered vehicles for linework and trucks for deliveries of concrete, water,

and other materials. Outside of the work area, construction traffic would cause exhaust emissions from the trucks and other vehicles used by crews, materials, and equipment to access the work area.

Construction is expected to take approximately 14 months for the overhead alignment. The peak number of construction personnel would be approximately 25-30 workers, and traffic to and from the site during construction would be approximately 30-50 round trips daily. The proposed Project includes two options as described in the Project Description, Option 1 is a fully overhead configuration of the transmission line, while Option 2 is partially overhead and partially underground. In order to capture maximum emissions possible, the proposed Project was modeled with phases pertaining to the overhead configuration as well as underground.

Project-related construction emissions calculations were modeled using the California Emissions Estimator Model (CalEEMod), version 2022.1.1.22. The detailed emission calculations are based on the proposed workforce and types of equipment as described in Appendix C. The activity details that were modeled and the results appear in Appendix C. Table 5.3-3 summarizes the maximum daily emission rates of the proposed Project construction activity.

Table 5.3-3. Maximum Daily Unmitigated Construction Emissions (lbs/day)

Construction Activity	VOC	NOx	CO	SO_2	PM10 (exhaust)	PM2.5 (exhaust)
Demolition	2.27	22.57	21.79	0.05	0.82	0.76
Site Preparation, Foundations	1.55	15.91	18.96	0.05	0.51	0.47
Overhead Installation	1.71	16.75	21.09	0.04	0.45	0.42
Underground Trenching	0.79	8.90	13.37	0.03	0.19	0.19
Underground Installation	1.71	16.75	21.09	0.04	0.45	0.42
Paving	5.95	11.67	16.21	0.03	0.39	0.36
Maximum Daily Construction Emissions	**5.95**	**22.57**	**21.79**	**0.05**	**0.82**	**0.76**
Threshold of Significance	**54**	**54**	**None**	**None**	**82**	**54**
Exceedance?	**No**	**No**	**--**	**--**	**No**	**No**

Sources: BAAQMD, 2022. Appendix C.

Table 5.3-3 shows that Project construction would not exceed the thresholds for individually significant Project impacts. The thresholds of significance (BAAQMD, 2022) recommended by the BAAQMD define mass emission rates that represent a potentially significant net increase for ozone precursor emissions (NOx or VOC) or exhaust emissions of particulate matter (PM10 and PM2.5). Construction-related criteria air pollutants would not exceed thresholds that indicate cumulatively considerable levels. For construction dust, the BAAQMD recommends a qualitative approach emphasizing implementation of effective emissions control measures that avoid causing a cumulatively considerable net increase. The qualitative approach to reducing dust reflects the nature of construction phase emissions that are generally short-term in duration.

Concurrent construction of other projects near the Project site could result in increased local air quality impacts for the duration of simultaneous construction activities. Emissions generated by Project construction would be temporary and variable and would be similar in nature to emissions from other typical and nearby construction activities. Simultaneous construction of other cumulative projects near the Project site would also be likely to implement general BAAQMD recommendations for minimizing air quality impacts. All activities must comply with BAAQMD rules regarding dust control.

To ensure that a cumulatively considerable net increase of emissions would not occur due to construction dust, basic construction emissions control strategies are drawn from BAAQMD guidance (BAAQMD, 2022). The recommended emissions control measures appear in Mitigation Measure AQ-1.

With mitigation, construction of the Project would not result in a cumulatively considerable net increase of any criteria pollutants for which the region in is nonattainment, and the construction-related emissions would not substantially contribute to any air quality violation. This impact would be less than significant.

Mitigation Measure for Construction-Phase Air Quality

MM AQ-1 **Implement Basic Construction Air Quality Mitigation.** The Project shall ensure that basic construction emissions control measures are implemented as "Best Management Practices," as follows:

- All exposed soil surfaces (e.g., parking areas, staging areas, soil piles, and graded areas) shall be watered as needed, up to two times per day.
- All haul trucks transporting soil, sand, or other loose material off-site shall be covered.
- All visible mud or dirt track-out onto adjacent public roads attributed to the Project shall be removed using wet power vacuum street sweepers at least once per day, if needed. The use of dry power sweeping is prohibited.
- All areas to be paved shall be completed as soon as possible. Foundation pads shall be laid as soon as possible after grading.
- Idling times shall be minimized either by shutting equipment off when not in use or reducing the maximum idling time to 5 minutes (as required by the California airborne toxics control measure Title 13, Section 2485 of California Code of Regulations [CCR]). Clear signage regarding idling shall be provided for construction workers at all access points.
- All construction equipment shall be maintained and properly tuned in accordance with manufacturer's specifications. All equipment shall be checked by a certified mechanic and determined to be running in proper condition prior to operation.
- Post a publicly visible sign with the telephone number and person to contact at SVP regarding dust complaints. This person shall respond and take corrective action within 48 hours. The BAAQMD's phone number shall also be visible to ensure compliance with applicable regulations.

LESS THAN SIGNIFICANT – OPERATIONS AND MAINTENANCE. Operational emissions would be limited to the vehicle and equipment used for periodic maintenance, repair, and inspection of the proposed Project. SVP's existing operations and maintenance group would assume inspection, patrol, and maintenance duties as needed. No additional staff would be required after project construction work is completed. Operational activities would not result in any net increase in mobile source emissions due to workers or staff maintaining the facility, and no new stationary sources are proposed. As a result, operation of the NRS-KRS Project would not result in a cumulatively considerable net increase of any criteria pollutant. This impact would be less than significant, and no mitigation would be required during operations.

(c) Would the project expose sensitive receptors to substantial pollutant concentrations?

LESS THAN SIGNIFICANT WITH MITIGATION – CONSTRUCTION. Construction would generate toxic air contaminants routinely found in the exhaust of gasoline powered motor vehicles and of diesel-fueled equipment, including diesel particulate matter (DPM). The Project would not involve any permanent or stationary

sources of air pollution, but construction would temporarily bring construction equipment into the Project site and onto roadways accessing the site.

Short-term emissions associated with construction would occur onsite and along the roadways accessing the work areas, and the activities would be variable in sequence and timing. The proposed activities include mobilizing vehicles and equipment, construction, crews, and materials, and use of fleet of diesel-powered offroad equipment on the site to install the Project components. Construction equipment and vehicles would access and move within the Project site throughout the construction duration of approximately 14 months. Within the overall duration, the emissions would vary and would not occur for long periods; this minimizes the potential that any location would be exposed to substantial pollutant concentrations.

Construction contractors would be required to control dust to avoid creating a nuisance, and the off-road diesel-fueled fleets regulation requires achieving a feasible level of control to minimize diesel exhaust emissions. Implementing "Best Management Practices" would minimize the emissions of pollutants, including dust and DPM or other toxic air contaminants. Mitigation Measure AQ-1 would control dust, limit equipment idling times, and properly maintain equipment to reduce construction phase emissions to levels below the applicable thresholds of significance. Implementing the best practices identified in the mitigation measure would ensure that receptors would not be exposed to substantial concentrations. Impacts under this criterion would be less than significant with mitigation for construction emissions.

LESS THAN SIGNIFICANT – OPERATIONS AND MAINTENANCE. During Project operations, emissions would result from limited use of vehicles for routine maintenance, repair, and inspection. Operational activities would not result in any net increase in mobile source emissions that could expose sensitive receptors to substantial concentrations of air pollutants. This impact would be less than significant, and no mitigation would be required during operations.

(d) Would the project result in other emissions (such as those leading to odors) adversely affecting a substantial number of people?

LESS THAN SIGNIFICANT. The proposed Project would not include any sources likely to create objectionable odors. Construction would involve the temporary use of vehicles and construction equipment and materials, such as fuels and lubricants, that may generate intermittent, minor odors. Odors that occur in equipment exhaust would be minimized by mandatory use of ultra-low sulfur diesel fuel. Emissions of this nature would occur briefly during construction and would cease at the end of construction. There would be no notable impact of objectionable odors affecting a substantial number of people. Operation activities would be limited to inspection, patrol, and maintenance as needed, and would not produce odors that would adversely affect a substantial number of people. This impact would be less than significant, and no mitigation is required.

5.4. Biological Resources

BIOLOGICAL RESOURCES Would the project:	Potentially Significant Impact	Less Than Significant With Mitigation Incorporated	Less Than Significant Impact	No Impact
(a) Have a substantial adverse effect, either directly or through habitat modifications, on any species identified as a candidate, sensitive, or special-status species in local or regional plans, policies, or regulations, or by the California Department of Fish and Wildlife or U.S. Fish and Wildlife Service?	☐	☒	☐	☐
(b) Have a substantial adverse effect on any riparian habitat or other sensitive natural community identified in local or regional plans, policies, regulations or by the California Department of Fish and Wildlife or U.S. Fish and Wildlife Service?	☐	☐	☐	☒
(c) Have a substantial adverse effect on state or federally protected wetlands (including, but not limited to, marsh, vernal pool, coastal, etc.) through direct removal, filling, hydrological interruption, or other means?	☐	☐	☐	☒
(d) Interfere substantially with the movement of any native resident or migratory fish or wildlife species or with established native resident or migratory wildlife corridors, or impede the use of native wildlife nursery sites?	☐	☐	☐	☒
(e) Conflict with any local policies or ordinances protecting biological resources, such as a tree preservation policy or ordinance?	☐	☒	☐	☐
(f) Conflict with the provisions of an adopted Habitat Conservation Plan, Natural Community Conservation Plan, or other approved local, regional, or State habitat conservation plan?	☐	☐	☐	☒

Significance criteria established by CEQA Guidelines, Appendix G.

5.4.1. Setting

This section describes the biological resources that occur in the proposed Project area. It includes a description of the existing biotic environment, including common plants and wildlife, sensitive habitats, special-status species and their locations in relation to the proposed Project. The following section (5.4.2) presents an analysis of potential impacts to biological resources and, where necessary, specifies mitigation measures to reduce potential impacts to less-than-significant levels.

For purposes of this analysis, the following designations apply:

- **Proposed Project Area**: The proposed Project area is defined as all areas subject to permanent and temporary impacts.
- **Study Area**: The Study Area is defined as the proposed Project area plus a 500-foot buffer.

Existing Habitat

The proposed Project is located within a fully developed urban area between the San Jose International Airport and Levi Stadium in the City of Santa Clara dominated by urban hardscape and land cover. Northern Receiving Station (NRS) is the northern terminus of the proposed Project, and the Kifer Receiving Station (KRS) is the southern terminus. An industrial land use property located at 1715 Martin Avenue in Santa Clara has been identified as a potential staging yard for the proposed Project. Access to the proposed Project work areas will be from existing adjacent paved roads.

Urban/developed areas occur throughout the proposed Project area and adjacent lands, and include paved roads, bare ground associated with disturbance or development, buildings, paved parking lots, road medians and roadsides, railroad tracks and right-of-way, and landscaped areas. Land uses within the Study

Area include residential, parks/open space, commercial, and industrial. Areas not containing hardscape are limited to residential, commercial, and roadside landscaped areas, landscaped parks/open space, and managed (e.g., mowing) ruderal areas of road shoulders and utility rights-of-way. Figure 5.4-1 shows a few ruderal, park/open space, and landscaped interchange areas meaningful to this analysis as they provide marginal habitat for certain special-status species. The Study Area does not contain natural vegetation community alliances as described in A Manual of California Vegetation (Sawyer et al., 2009). The topography of the Study Area is relatively flat and open, increasing in elevation roughly north to south from approximately 10 to 50 feet above mean sea level.

A biological resources reconnaissance survey was not conducted for the proposed Project. Information used in preparing this section was derived from:

- U.S. Fish and Wildlife Service (USFWS) Information for Planning and Consultation (IPaC) federal resource list for the proposed Project area (USFWS, 2024a);
- California Department of Fish and Wildlife (CDFW) Biogeographic Information and Observation System (BIOS) Viewer (Map) California Natural Diversity Database (CNDDB) summary table report within a 5-mile buffer of the proposed Project area (CDFW, 2024);
- California Native Plant Society (CNPS) Rare Plant Inventory (RPI) species list within the two U.S. Geological Survey (USGS) 7.5-minute quadrangles overlapping the proposed Project area, including Milpitas and San Jose West (CNPS, 2024);
- Jepson eFlora (Jepson eFlora, 2024) online version of *The Jepson Manual: Higher Plants of California* (Baldwin et al., 2012) with access to Consortium of California Herbaria (CCH) record locations and details for RPI-identified species;
- California Academy of Sciences and National Geographic Society – iNaturalist (iNaturalist, 2024) sensitive species observations within a 5-mile buffer of the proposed Project area;
- The Cornell Lab of Ornithology eBird (eBird, 2024) sensitive species observations within a 5-mile buffer of the proposed Project area;
- U.S. Department of Agriculture Natural Resources Conservation Service (USDA NRCS) Web Soil Survey (USDA NRCS, 2024a) and National Hydric Soil List (USDA NRCS, 2024b) for data on soil units mapped within and adjacent to the proposed Project area; and
- USFWS National Wetlands Inventory (NWI) Wetlands Mapper (USFWS, 2024b) for wetlands and waters mapped within and adjacent to the proposed Project area.

Special-Status Plants and Animals

Special-status species are plant and wildlife species that have been afforded special protection by federal, state, or local resource agencies or organizations. The literature review identified 15 special-status plant species and 48 special-status wildlife species within 5 miles of the proposed Project area (see Appendix E of this IS/MND). Based on this literature review and desktop analysis of the Study Area, there is low to moderate potential for 11 special-status wildlife to occur within or adjacent to the proposed Project area due to the presence of marginal to suitable habitat. Due to the developed and disturbed nature of the Study Area, no special-status plant species have potential to occur within or adjacent to the proposed Project area. Due to a lack of marginal or suitable habitat, no special-status fish or amphibian species have potential to occur within or adjacent to the proposed Project area.

Figure 5.4-1. Vegetation and Land Cover

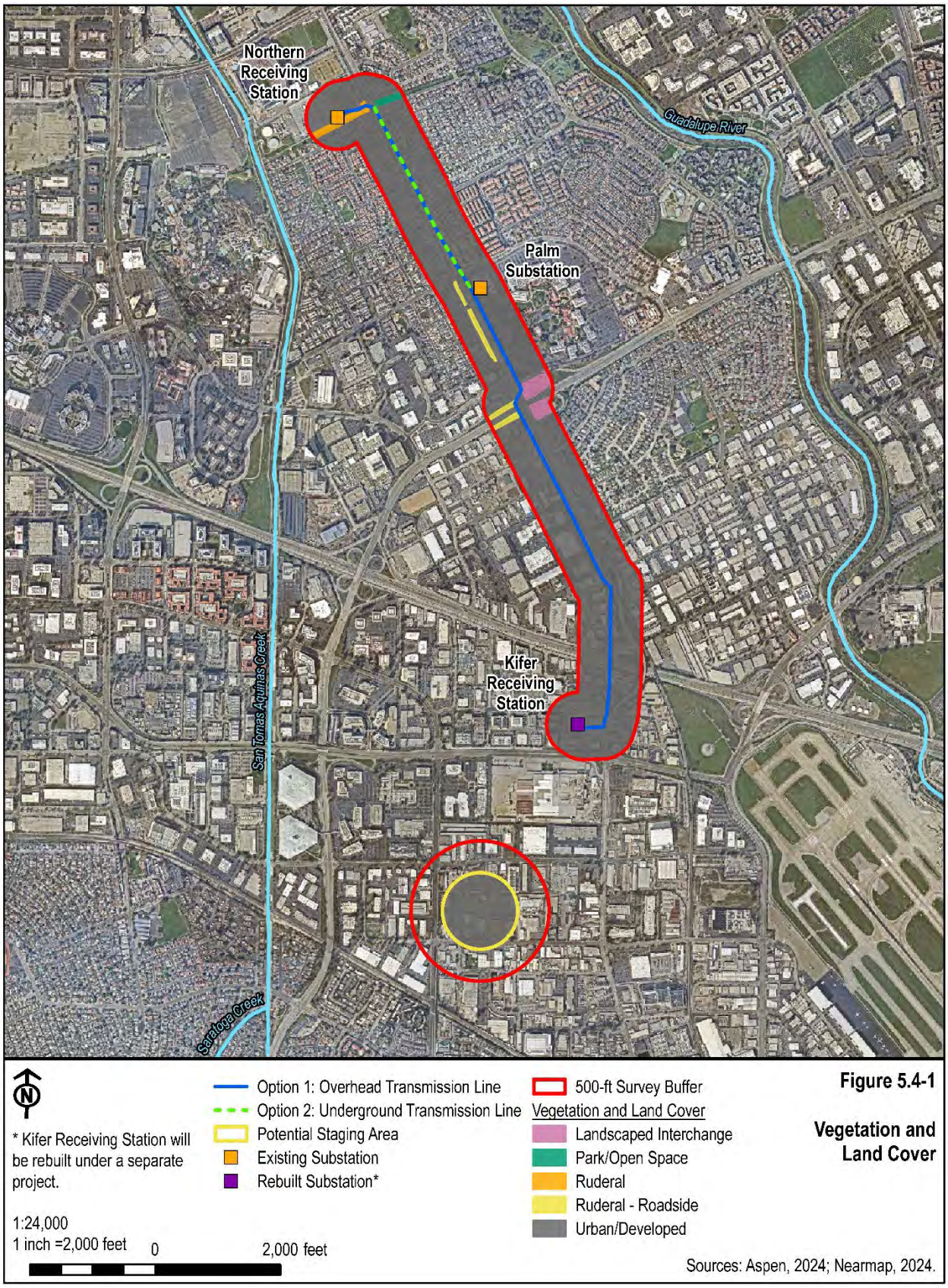

Jurisdictional Waters

There are no potentially jurisdictional waters or wetlands within the proposed Project area based upon a review of the USFWS NWI Wetlands Mapper (USFWS, 2024b), USGS Milpitas and San Jose West 7.5-minute quadrangle map, and Google Earth aerial and street view imagery. A formal aquatic resources delineation was not completed for the proposed Project.

Regulatory Background

Federal

Endangered Species Act (16 U.S.C. § 1531 et seq., and 50 C.F.R., part 17.1 et seq.). The federal Endangered Species Act (FESA) designates and provides for protection of threatened and endangered plant and wildlife species and their critical habitat. "Take" of a federally listed species is prohibited without the appropriate permits, which may be obtained through Section 7 consultation (between federal agencies) or a Section 10 Habitat Conservation Plan.

The Bald and Golden Eagle Protection Act (16 U.S.C. § 668-668c). This Act—enforced through regulations written by the USFWS—prohibits the "taking" of bald and golden eagles, including their parts, nests, or eggs. To take is defined as to "pursue, shoot, shoot at, poison, wound, kill, capture, trap, collect, destroy, molest, or disturb" any bald or golden eagle, whether "alive or dead...unless authorized by permit". The administering agency is USFWS.

Migratory Bird Treaty Act (16 U.S.C §§ 703-711). The Migratory Bird Treaty Act (MBTA) makes it illegal to take, possess, import, export, transport, sell, purchase, barter, or offer for sale, any migratory bird, or the parts, nests, or eggs of such a bird except under the terms of a valid federal permit. The USFWS has authority and responsibility for enforcing the MBTA. The administering agency is USFWS.

Clean Water Act Sections 401 and 404 (33 U.S.C., §§ 1251—1376). The Clean Water Act (CWA) regulates the chemical, physical, and biological integrity of the nation's waters. Section 401 of the CWA requires that an applicant obtain State certification for discharge into waters of the United States. The Regional Water Quality Control Boards administer the certification program in California. Section 404 of the CWA established a permit program, administered by the U.S. Army Corps of Engineers, to regulate the discharge of dredged or fill material into waters of the United States, including wetlands.

State

California Endangered Species Act (Fish and Game Code [CFGC] §§ 2050-2098). The California Endangered Species Act (CESA) of 1984 states that all native species of fish, amphibians, reptiles, birds, mammals, invertebrates, and plants, and their habitats, threatened with extinction and those experiencing a significant decline which, if not halted, would lead to a threatened or endangered designation, will be protected and preserved. CESA prohibits the take of any species of wildlife designated by the California Fish and Game Commission as endangered, threatened, or candidate species. The CDFW may authorize the take of any such species if certain conditions are met. These criteria are listed in Title 14 of the California Code of Regulations, Section 783.4 subdivisions (a) and (b). For purposes of CESA "take" means to hunt, pursue, catch, capture, or kill (CFGC § 86). The administering agency is CDFW.

Fully Protected Species (CFGC §§ 3511, 4700, 5050, 5515, and 2081.15). These sections designate certain species as fully protected and prohibit the take of such species or their habitat unless for scientific purposes (see also Cal. Code Regs., tit. 14, §670.7). The incidental take of fully protected species may also be authorized in an approved natural community conservation plan (CFGC § 2835). California Senate Bill 147 (signed by Governor Newsom July 2023) amends 3511, 4700, 5050, and 5515 and Section 395, and adds Section 2081.15 to the Fish and Game Code. Fish and Game Commission is required to establish a list of endangered species and a list of threatened species and to add or remove species if the action is

warranted. "The act prohibits the taking of endangered or threatened species, except in certain situations, including, if specific conditions are met, through the issuance of a permit commonly known as an incidental take permit." CDFW is authorized to issue a permit under CESA that would authorize the take of fully protected species resulting from impact attributable to the implementation of specified projects if certain conditions are met. This remains in effect until December 31, 2033. The administering agency is CDFW.

CFGC Protection for Birds. CFGC Section 3503 states that it is unlawful to take, possess, or needlessly destroy the nest or eggs of any bird, except as otherwise provided by this code or any regulation made pursuant thereto. Section 3503.5 makes it unlawful to take, possess, or destroy any birds of prey or to take, possess, or destroy the nest or eggs of any such bird. Section 3513 makes it unlawful to take or possess any migratory non-game birds designated under the MBTA, except as provided by rules and regulations adopted under the MBTA. Section 3800 defines all birds occurring naturally in California that are not resident game birds, migratory game birds, or fully protected birds are nongame birds. It is unlawful to take any nongame bird except as provided in this code or in accordance with regulations of the commission.

California Species of Special Concern. "Species of Special Concern" is a designation assigned by the CDFW to species it considers at risk. Species of Special Concern meet one or more of the following criteria: (1) is extirpated from the State or, in the case of birds, in its primary seasonal or breeding role; (2) is federally, but not State, listed as threatened or endangered; meets the State definition of threatened or endangered but has not formally been listed; (3) is experiencing, or formerly experienced, serious (noncyclical) population declines or range retractions (not reversed) that, if continued or resumed, could qualify it for State threatened or endangered status; (4) has naturally small populations exhibiting high susceptibility to risk from any factor(s), that if realized, could lead to declines that would qualify it for State threatened or endangered status. "Species of Special Concern" is an administrative designation intended to focus attention on at-risk species during environmental review and conservation planning. Species of Special Concern should be considered during the environmental review process. CEQA (California Public Resources Code §§ 21000 21177) requires state agencies, local governments, and special districts to evaluate and disclose impacts from "projects" in the state. Because Section 15380 of the CEQA Guidelines defines endangered, rare or threatened species to include species which meet criteria consistent with the criteria required for listing under the federal and/or state endangered species acts regardless of whether such species are formally listed, Species of Special Concern are appropriately considered in the analysis of Project impacts.

Furbearing and Mammal Protection. Additional regulations are in place protecting furbearing mammals as follows:

- Fish and Game Code §251.1 prohibits the harassment of any furbearing mammal. Harass is defined as an intentional act that disrupts an animal's normal behavior patterns, which includes, but is not limited to, breeding, feeding, or sheltering.
- California Code of Regulations Title 14 §460 states that fisher, marten, river otter, desert kit fox and red fox may not be taken at any time.

CEQA Guidelines §15380. Enacted in 1970, CEQA requires an applicant to fully disclose environmental impacts before issuance of a permit by state and local agencies. State CEQA Guidelines Section 15380(b) articulates the classifications of species to be analyzed under CEQA. In general, impacts to plants or their habitat having a California Rare Plant Rank of 1A (plants presumed extirpated in California and either rare or extinct elsewhere), 1B (plants rare, threatened, or endangered in California and elsewhere), 2A (plants presumed extirpated in California, but common elsewhere), 2B (plants rare, threatened, or endangered in California), or 3 (plants about which more information is needed — a review list) must be analyzed during preparation of the environmental documents relating to CEQA. According to the California Native

Plant Society's (CNPS) Rare Plant Program, species with these California Rare Plant Rank rankings meet the definition of "rare and endangered" under the CEQA Guidelines.

Native Plant Protection (CFGC § 1900 et seq.). The Native Plant Protection Act was enacted in 1977 and designates state rare and endangered plants and provides specific protection measures for identified populations. Those laws prohibit the take of endangered or rare native plants but include some exceptions for agricultural and nursery operations; for emergencies; after properly notifying CDFW, for vegetation removal from canals, roads, and other sites; due to changes in land use; and in certain other situations. The administering agency is CDFW.

Porter-Cologne Water Quality Control Act (California Water Code Division 7). The State Water Resources Control Board (SWRCB) and the nine Regional Water Quality Control Boards (RWQCBs) have jurisdiction over all surface water and groundwater in California, including wetlands, headwaters, and riparian areas. The SWRCB or applicable RWQCB must issue waste discharge requirements for any activity that discharges waste that could affect the quality of waters of the state.

Local

City of Santa Clara General Plan. The City's General Plan was adopted on November 16, 2010, and updated on December 9, 2014. Goals and policies specific to the City's General Plan to protect and preserve the city's natural habitat and wildlife are described in Chapter 5 Goals and Policies, Section 10 Environmental Quality. Those goals and policies that are important with respect to the project area as follows:

Conservation Goals

- Conservation Goal 5.10.1 G1: The protection of fish, wildlife and their habitats, including rare and endangered species.
- Conservation Goal 5.10.1 G2: Conservation and restoration of riparian vegetation and habitat.

Conservation Policies

- Conservation Policy 5.3.1 P10: Provide opportunities for increased landscaping and trees in the community, including requirements for new development to provide street trees and a minimum 2:1 on- or off-site replacement for trees to be removed as part of the proposal to help increase the urban forest and minimize the heat island effect.
- Conservation Policy 5.10.1 P1: Require environmental review prior to approval of any development with the potential to degrade the habitat of any threatened or endangered species.
- Conservation Policy 5.10.1 P2: Work with Santa Clara Valley Water District and require that new development follow the "Guidelines and Standards for Lands Near Streams" to protect streams and riparian habitats.
- Conservation Policy 5.10.1 P3: Require preservation of all City-designated heritage trees listed in the Heritage Tree Appendix 8.10 of the General Plan (see Appendix C of the Arborist Report).
- Conservation Policy 5.10.1 P4: Protect all healthy cedars, redwoods, oaks, olives, bay laurel and pepper trees of any size, and all other trees over 36 inches in circumference measured from 48 inches above-grade on private and public property as well as in the public right-of-way.
- Conservation Policy 5.10.1 P5: Encourage enhancement of land adjacent to creeks in order to foster the reinstatement of natural riparian corridors where possible.
- Conservation Policy 5.10.1 P12: Encourage property owners and landscapers to use native plants and wildlife-compatible non-native plants, when feasible.

Santa Clara City Codes and Ordinances. Santa Clara City Code (City Code) sections 12.35 regulates trees on City land (i.e., public rights-of-way or easements, streets, and parks) and private land. A City permit is required for removing the following protected trees (§12.35.080):

- Heritage trees in all zoning districts.
- All trees of the following species on private property with a diameter of 12-inches or more when measured at 54-inches above natural grade: California buckeye (*Aesculus californica*), big leaf maple (*Acer macrophyllum*), deodar cedar (*Cedrus deodara*), camphor tree (*Cinnamomum camphora*), western sycamore (*Platanus racemosa*), coast live oak (*Quercus agrifolia*), valley oak (*Q. lobata*), black oak (*Q. kelloggii*), blue oak (*Q. douglasii*), interior live oak (*Q. wislizeni*), other native oak trees (*Quercus* sp.), coast redwood (*Sequoia semperivirens*), and California bay (*Umbellularia californica*).
- Approved development trees.
- Any tree on private land with a trunk diameter of 38-inches or more when measured at 54-inches above natural grade.
- Any multibranched tree on private land which has major branches below 54-inches above natural grade with a diameter of 38-inches or more measured below the first major trunk fork.

The Department of Community Development considers many factors in reviewing a tree removal permit application, including, but not limited to, if the tree can cause potential damage to an existing or proposed essential structure, or interfere with utility services and cannot be controlled or remedied through reasonable relocation or modification of the structure or utility service (§12.35.090[c][4][A]). The City does not require the replacement of trees unless the project involves obtaining a discretionary permit (§12.35.100).

City trees and protected trees shall be protected by use of best management practices, design conditions, and measures listed in City Code, section 12.35.100 (d-f). When possible, work shall be conducted in accordance with American National Standards Institute (ANSI) A300 standards, developed as voluntary industry consensus standards by the Tree Care Industry Association, and follow tree care best management practices published by International Society of Arboriculture (ISA) necessary to protect the vitality of the tree.

Santa Clara Valley Habitat Plan. Adopted in 2013, the Santa Clara Valley Habitat Plan (Plan) is a 50-year regional plan designed for the protection and recovery of sensitive biological resources within a large portion of Santa Clara County while allowing for future development (ICF International 2012). The Plan area includes two geographic regions, the North Valley and South Valley. The northern boundary of the Plan area extends to the Alameda and Santa Clara Counties boundary, excluding the Milpitas City Limits and lands owned by the San Francisco Public Utilities Commission. The northwestern boundary is the Guadalupe River and boundary between the cities of Santa Clara and San Jose. Plan covered activities categories include urban development, in-stream capital projects, in-stream operations and maintenance, rural capital projects, rural operations and maintenance, rural development, and conservation strategy implementation. Construction, maintenance, and use of public and private utilities including electric transmission and distribution lines are Plan covered activities within the urban development category. The Plan also Includes an expanded study area for identified for burrowing owl conservation and is located in the northern edge of the county in portions of the cities of San Jose, Santa Clara, Mountain View, Milpitas, and Sunnyvale (ICF International 2012). The Project site is located within the expanded study area for burrowing owl conservation and approximately 2 miles outside the Plan area boundary.

5.4.2. Environmental Impacts and Mitigation Measures

(a) Would the project have a substantial adverse effect, either directly or through habitat modifications, on any species identified as a candidate, sensitive, or special status species in local or regional plans, policies, or regulations, or by the California Department of Fish and Wildlife or U.S. Fish and Wildlife Service?

LESS THAN SIGNIFICANT WITH MITIGATION INCORPORATED. The proposed Project area lacks natural vegetation communities. Direct and indirect impacts from the proposed Project will be restricted to areas containing urban/developed and ruderal land cover types. The proposed Project area is in a highly developed, built out urban area and contains no habitat for special-status plant species and limited habitat suitable for most special-status wildlife species unless they are adapted to urban environments. If present, most special-status wildlife species would likely occur during migratory movements or periodic foraging events and would not be expected as resident species in the proposed Project area. However, if present within or adjacent to the proposed Project area, the proposed Project could result in direct or indirect impacts to special-status wildlife species. These impacts would be avoided or minimized with the implementation of Mitigation Measures (MMs) BIO-1 through BIO-6 proposed below.

Special-Status Plants

The construction and operation/maintenance of the proposed Project would not affect state or federally listed threatened or endangered plants, state rare plants, or any California Rare Plant Ranked special-status plants. No special status plants were identified during the literature review and desktop analysis has having a potential to occur due to the developed and disturbed nature of the Study Area. No impacts to special-status plant species are expected.

Special-Status Wildlife

Based on a literature review and desktop analysis of the Study Area, there is low to moderate potential for 17 special-status wildlife to occur within or adjacent to the proposed Project area due to the presence of marginal to suitable habitat.

Construction Impacts on Special-Status Wildlife

Invertebrates

The following special-status invertebrate species were considered for this analysis:

- Monarch butterfly (*Danaus plexippus plexippus*) – Federal listing candidate, State Rank (SR) S2
- Obscure bumble bee (*Bombus caliginosus*) – CDFW Special Animal, SR S1S2
- Crotch's bumble bee (*Bombus crotchii*) – CESA candidate for Endangered listing, SR S2
- Western bumble bee (*Bombus occidentalis*) – CESA candidate for Endangered listing, SR S1

Monarch butterfly overwinters in wind-protected tree groves, primarily preferring gum trees (*Eucalyptus* spp.) but also using native trees such as Monterey pine (*Pinus radiata*), Monterey cypress (*Cupressus macrocarpa*), western sycamore (*Platanus racemosa*), coast redwood (*Sequoia sempervirens*), and coast live oak (*Quercus agrifolia*). Monarchs return to the same overwintering sites annually, are typically along the Pacific Coast and San Francisco Bay. Migrating adults will forage on a variety of plants, whereas larvae primarily feed on milkweed (*Asclepias* sp.) species (Jepsen et al. 2015). A variety of roosting trees can be used during fall migration (USFWS 2020).

The proposed project area does not support suitable foraging or egg-laying habitat for monarch butterfly and the proposed Project area is outside of the known overwintering range for the species. Monarch butterfly could occur as a migrant that moves through the area to preferable overwintering sites along the coast. Monarch butterfly is known to occur in the region from numerous iNaturalist observations

(iNaturalist, 2024); there are no CNDDB records within 5 miles of the proposed Project area. This species could occur in the region as a migrant during construction. The proposed Project area lacks natural vegetation communities that could support milkweed species. Urban yards adjacent to the Project area could support periodic milkweed or other foraging plants. However, based on the limited habitat and incidental use of milkweed or foraging plants, impacts to this species would be considered less than significant and no mitigation is required. Nonetheless, should this species occur in the Project area as a transient, construction related impacts would be reduced by mitigation requirements for other wildlife species which include MM BIO-1 through MM BIO-3 requiring worker environmental awareness training, periodic biological monitoring if needed, and a general preconstruction survey. Although not required for this species, these measures would avoid or reduce impacts to this species should it occur in the Project area during construction.

The current ranges, distribution, and abundance of obscure bumble bee, Crotch's bumble bee, and western bumble bee are poorly understood (CDFW 2019; Xerxes Society 2018). The proposed Project area is located within the species range for both obscure bumble bee and Crotch's bumble bee, and within the historic range for western bumble bee (CWHR 2023; Hatfield et al. 2015). There is one historic CNDDB record within 5 miles of the proposed Project for each of these bumble bee species (CDFW, 2024): one 1954 record for obscure bumble bee, one 1903 record for Crotch's bumble bee, and one 1979 record for western bumble bee, all presumed extant, are mapped generally to San Jose and overlapping the southern half of the Study Area. There are several potential sightings of obscure bumble bee from the California Bumble Bee Atlas community science project, identified to be either obscure bumble bee or a second species similar in appearance (Bumble Bee Watch, 2024). These potential obscure bumble bee sightings are of foraging individuals and primarily located at or near urban parks or urban residences or other buildings with ornamental landscaping, with the nearest being along the Guadalupe River Trail approximately 0.9 miles east northeast of the Project area (proposed structure 18). Crotch's bumble bee is further known in the region from three verified community science observations of foraging individuals within 5 miles, the nearest located foraging in an ornamental landscaped area in urban San Jose approximately 3.6 miles southeast of the Project area (Bumble Bee Watch, 2024; iNaturalist, 2024). There are no community science observations for western bumble bee within 5 miles (Bumble Bee Watch, 2024; CDFW, 2024; iNaturalist, 2024).

The proposed Project area lacks natural vegetation communities that would contain abundant floral resources. Urban yards adjacent to the Project area could support periodic floral resources that could potentially support special-status bumble bees. Although further research is needed, the likely foraging range for special-status bumble bee species is approximately 0.6 to 1.2 miles (1 to 2 kilometers) from the nest on a single trip (CDFW, 2023). Limited marginal habitat that could potentially support nesting special-status bumble bee species is located within or adjacent to the proposed Project area in the utility right-of-way adjacent to the NRS at the north end of the Project area and by Montague Expressway, in the landscaped area inside of the westbound onramp and on the fill slope supporting the Montague Expressway overcrossing on the west side of Lafayette Street. The marginal habitat at these locations consists of ruderal land cover containing primarily grasses and other herbaceous vegetation. Current and historic Google Earth aerial and street view imagery suggests these ruderal areas are periodically managed for weeds and fire abatement through mowing and/or discing. Google Earth aerial imagery also suggests the utility right-of-way and the landscaped interchange have been further disturbed by periodical use as staging areas for equipment and materials for other unrelated construction projects as recently as February 2024 and June 2022, respectively. Based upon the limited floral resources present and the limited marginal nesting habitat present in highly disturbed ruderal locations, there is a very low/minimal potential for a special-status bumble bee species nest(s) to be present. Nonetheless, should special status bumble bee species occur in the Project area, construction related impacts would be reduced by mitigation requirements for other wildlife species which include MM BIO-1 through MM BIO-3 requiring

worker environmental awareness training, periodic biological monitoring if needed, and a general preconstruction survey.

Fish and Amphibians

The proposed Project will not affect any federally or state listed fish or amphibian species. Due to a lack of marginal or suitable habitat, no special-status fish or amphibian species are expected to occur within or adjacent to the proposed Project area.

Reptiles

The proposed Project will not affect any federally or state listed fish or amphibian species. Due to a lack of marginal or suitable habitat, most special-status reptiles are not likely to occur. One special-status reptile species that is a candidate for federal listing was considered for this analysis:

- Western pond turtle (*Actinemys marmorata*) – Federal ESA candidate for Threatened listing, CDFW SSC, SR S3

The proposed Project area does not support suitable aquatic habitat that could support western pond turtle. Western pond turtle is known to occur in the region from 13 CNDDB records and numerous iNaturalist observations within 5 miles, including along the salt evaporation ponds along the bay approximately 2.25 miles northwest and the Guadalupe River approximately 0.75 miles east of the Project area (CNDDB, 2024; iNaturalist, 2024). There are many migratory movement barriers (i.e., roads, buildings, other hardscape,) present that would prevent western pond turtle from traveling into the Project area from the bay edge and the Guadalupe River. Western pond turtle is also known to occur in San Tomas Aquino Creek from two CNDDB records, a 1989 occurrence approximately 0.75 miles northwest of the NRS and a 2017 occurrence approximately 0.65 miles southwest of the KRS (CNDDB, 2024). The closest suitable aquatic habitat is located at San Tomas Aquino Creek, approximately 0.3 miles southwest of the NRS. The ruderal utility right-of-way adjacent to the NRS and proposed structures 1, 2, and 3 at the north end of the Project area provides limited marginal upland habitat for western pond turtle. The typical upland migration and/or dispersal distance for western pond turtle is up to approximately 0.3 miles (USFWS, 2023). The marginal habitat at this location consists of ruderal land cover containing primarily grasses and other herbaceous vegetation. Current and historic Google Earth aerial and street view imagery suggests this ruderal area is periodically managed for weeds and fire abatement through mowing and/or discing. Google Earth aerial imagery also suggests this utility right-of-way has been further disturbed by periodical use as a staging area for equipment and materials for other unrelated construction projects as recently as February 2024. Further, based on Google Earth aerial and street view imagery, two chain-link fences exist between San Tomas Aquino Creek and the project work areas located on the west side of Lafayette Street, one on either end of the ruderal utility right-of-way. These chain-link fences likely present a barrier to upland movements unless holes under the fences, or other breaks in the fence line, exist or develop in the future.

In the event that western pond turtle is present within or adjacent to the proposed Project area, destruction or abandonment of nest sites or occupied burrows or mortality from crushing by vehicles or equipment would be considered significant. Implementation of MM BIO-1 through MM BIO-3 requiring worker environmental awareness training, periodic biological monitoring if needed, and a general preconstruction survey, would reduce impacts to western pond turtle to less than significant.

Birds

Native birds are regulated by the MBTA and CFGC Section 3503. These regulations also protect federally or state listed birds, fully protected birds, bird species of special concern, watch list bird species, and birds of conservation concern. Though watch list species and birds of conservation concern do not typically warrant protections under CESA, they would be protected under the MBTA and CFGC. A variety of common birds may nest within or adjacent to the proposed Project area, including California scrub jay,

mourning dove, Cooper's hawk, and great egret. Nests may be built in trees or other vegetation, on the ground, or on existing buildings or other structures. Birds may also attempt to nest in construction materials or on idle construction equipment. Due to the urban/developed land cover and the regular disturbance experienced from urban anthropogenic activities, mowing, and vehicle and equipment staging within or adjacent to the proposed Project area, it is more likely that special-status avian species adapted to developed or semi-developed environments would nest in or near the proposed Project area. Even in the urban/developed land cover, the loss of native and migratory bird species would be considered a significant impact.

In addition to common bird species, the following special-status bird species were considered for this analysis:

- Burrowing owl (*Athene cunicularia*) – CDFW SSC, USFWS Bird of Conservation Concern (BCC), SR S2
- Swainson's hawk (*Buteo swainsoni*) – ST, SR S4
- White-tailed kite (*Elanus leucurus*) – CDFW Fully Protected (FP), SR S3S4
- American peregrine falcon (*Falco peregrinus anatum*) – Federally and State de-listed, S3S4

Two of the special-status species listed would not be expected to nest within or near the proposed Project area due to a lack of suitable habitat and the current level of ongoing disturbance. Although marginal nesting habitat is present, the proposed Project area is outside of the current breeding range within California for Swainson's hawk (CDFW, 2016). The proposed Project area and surrounding land lack suitable cliff ledges, tall buildings, or similar features that would provide suitable nesting habitat for American peregrine falcon. However, these special-status bird species have a low to moderate potential to forage within or adjacent to the proposed Project area. The Project will not convert any land cover that could be used as foraging habitat. Construction related impacts to foraging protected birds would be short-term and temporary in nature.

Burrowing owl is an urban-adapted raptor species which occurs in open, dry annual or perennial grasslands, deserts, and scrublands characterized by low growing vegetation (CWHR, 2021). This species requires subterranean nesting and roosting features such as California ground squirrel (*Otospermophilus beecheyi*) burrows or analogous features (CWHR, 2021). Burrowing owl is known in the region from 32 CNDDB records within 5 miles of the proposed Project, including some that are known or suspected to be extirpated. A 2014 CNDDB occurrence record overlaps the NRS, adjacent land, and the Levi Stadium facility (CDFW, 2024); the entire area of this occurrence polygon has been developed or has been heavily disturbed in the case of the ruderal utility right-of-way. Extant populations are documented in 2004 and 2009 CNDDB occurrence records, respectively, at the Santa Clara Golf and Tennis Club located approximately 0.5 miles north of the NRS and at the San Jose International Airport located approximately 0.5 miles east of the KRS (CDFW, 2024). There are also numerous community science observations of burrowing owl within 5 miles, including during the March through August breeding season (eBird, 2024; CWHR, 2021; iNaturalist, 2024). Limited marginal habitat for burrowing owl is located within or adjacent to the proposed Project area at adjacent to the NRS, at the landscaped areas on Lafayette Street at Montague Expressway. The marginal habitat at these locations consists of ruderal land cover containing primarily grasses and other herbaceous vegetation. Current and historic Google Earth aerial and street view imagery suggests these ruderal areas are periodically managed for weeds and fire abatement through mowing and/or discing. Google Earth aerial imagery also suggests the utility right-of-way and the landscaped interchange area has periodically been used to stage equipment and materials for other unrelated construction projects as recently as February 2024 and June 2022, respectively. Due to the presence of limited marginal nesting and foraging habitat, the documented occurrences in proximity to the Project area, and the species' adaptation to urban environments, the potential for burrowing owl to occur within or adjacent to the proposed Project area is moderate; therefore, direct impacts to burrowing owl could occur.

White-tailed kite is a raptor species which occurs in open grasslands, meadows, marshes, and agricultural areas close to isolated, dense-topped trees used for nesting and perching (CWHR, 2021). White-tailed kite is known in the region from one recent 2004 and one 1971 CNDDB record located in or adjacent to open grassland habitats by the bay approximately 1.3 to 1.6 miles north northeast of the NRS (CDFW, 2024). There are also numerous community science observations within 5 miles, including a 2022 eBird observation located at the Oracle Santa Clara Campus adjacent to the Palm Substation and between the substation and Montague Expressway (eBird, 2024; iNaturalist, 2024). Limited suitable nesting trees are present within or near the proposed Project area, particularly along San Tomas Aquino Creek to the west of the NRS, Lick Mill Park to the east of NRS, the Oracle Santa Clara Campus between the Palm Substation and Montague Expressway. Limited marginal foraging habitat is present adjacent to the NRS, the landscaped interchange, and ruderal road shoulders along the west side of the Montague Expressway overpass. The marginal foraging habitat consists of ruderal land cover containing primarily grasses and other herbaceous vegetation. Current and historic Google Earth aerial and street view imagery suggests these ruderal areas are periodically managed for weeds and fire abatement through mowing and/or discing. Google Earth aerial imagery also suggests the utility right-of-way and the landscaped interchange at Montague Expressway have periodically been used to stage equipment and materials for other unrelated construction projects as recently as February 2024 and June 2022, respectively. Due to the high level of disturbance experienced in the limited marginal nesting and foraging habitat, the potential for white-tailed kite to occur within or adjacent to the proposed Project area is low.

With the exception of a few non-native birds, such as European starling (*Sturnus vulgaris*) and house sparrow (*Passer domesticus*), the loss of active bird nests or young is regulated by the MBTA and CFGC Section 3503. Direct or indirect impacts to nesting birds or raptors, if present, would be considered significant. Implementation of the proposed Project could disturb birds if they nest in or near the proposed Project area. Direct impacts could include loss of nests from contact with construction equipment. If present on the ground within the proposed Project area, nests or eggs could be subject to destruction from crushing by construction vehicles, equipment, or personnel. As described in Section 4 Project Description and in the arborist report prepared for the Project (Appendix D), trees may require either full removal or clearance pruning to construct the Project. The maximum allowable tree height under the transmission lines will vary from 27 to 35 feet depending upon location.

To reduce impacts to nesting bird species, the Project will implement MM BIO-1 through BIO-4, which requires worker training, periodic biological monitoring if needed, a general preconstruction survey for special-status species, and a focused survey for nesting birds and raptors (if construction activities are scheduled during the breeding season). Implementation of these measures would reduce impacts to nesting bird and raptor species to less than significant.

Mammals

The Project site does not provide habitat for federally or state listed mammal species or fur-bearing mammals. The Project site could provide potential habitat for a variety of special status bat species. Bats utilize a variety of daytime rooting sites, including caves, rock crevices, mines, trees and snags, bridges, and buildings and structures. While some bats are colonial, living in large colonies in caves or under bridges, others are solitary, roosting in trees and crevices. Sensitive periods for bats include the hibernation season, when bats are sustaining on fat reserves, and the maternity season, when female bats give birth to babies. The decline of bat populations is often due to roost site disturbance or loss. Due to their sensitivity to noise, human presence, and other disturbance factors, impacts to bat roosts would be considered a significant impact.

The following special-status bat species were considered for this analysis:

- Townsend's big-eared bat (*Corynorhinus townsendii*) – CDFW SSC, SR S2
- Western red bat (*Lasiurus frantzii*) – CDFW SSC, SR S3

Townsend's big-eared bat is a flying mammal species which primarily roosts on the walls and ceilings of caves and mines but also within buildings, bridges, rock crevices, and hollow trees (CWHR, 2024; WBWG, 2017). A specific roost may be used during one season or may be used throughout the year for maternity, hibernation, or breeding (CDFW, 2013). Summer maternity colonies are formed between March and June and can be made of a few individuals to several hundred (CDFW, 2013). This bat species is extremely sensitive to human disturbance (CWHR, 2024; WBWG, 2017). The Montague Expressway overpass bridge structure over Lafayette Steet provides limited marginal suitable roosting habitat to support this species. The proposed Project will not impact the overpass bridge structure. The Study Area provides limited suitable foraging habitat to support this species.

Western red bat is a flying mammal species that roosts throughout the year amongst the foliage of trees or shrubs, particularly in edge habitats adjacent to streams or open habitats such as grasslands and agricultural lands (CWHR, 2024; WBWG, 2017). This bat species is highly migratory and typically solitary but may roost in clusters of up to several individuals. Maternity season occurs between May and July (CWHR, 2024; WBWG, 2017). The proposed Project area and adjacent lands contain limited suitable foraging habitat and limited trees and shrubs suitable to support roosting for this species, particularly along San Tomas Creek to the west of the NRS, Lick Mill Park east of NRS, and the Oracle Santa Clara Campus between the Palm Substation and the Montague Expressway interchange.

Due to the existing level of disturbance in proximity to the limited marginal roosting and foraging habitat, special status bat species are not expected to occur or are expected to be more tolerant of disturbance due to the baseline level of human activity from vehicle traffic and human presence, as in the case of the Montague Expressway Overpass bridge. If present within vegetation requiring removal or trimming, direct impacts could include mortality from contact with construction equipment or abandonment of roosts and, if during the maternity season, of pups incapable of flight. To reduce impacts, the Project will implement MM BIO-1, BIO-2, and BIO-5, which will require worker training, periodic biological monitoring if needed, a preconstruction survey for bat roosts, and development and implementation of a Bat Mitigation and Monitoring Plan if roosts are detected. Implementation of these measures would avoid impacts to special-status bat species maternity roosts and reduce impacts to less than significant.

Direct impacts to special-status wildlife resulting from construction of the proposed Project could also occur from exposure to noise or vibration, fugitive dust, or exposure to hazardous materials. As described in Section 5.3 (Air Quality), Silicon Valley Power would implement measures to control and suppress fugitive dust in compliance with all standards required by the Bay Area Air Quality Management District. As described in Section 5.10 (Hydrology and Water Quality), hazardous materials control measures would be used throughout construction to reduce potential impacts. Construction activities would require the use of vehicles and heavy equipment capable of generating noise and ground vibration within and adjacent to the proposed Project area. As discussed in Section 5.13 (Noise), impacts from construction-related ground vibration would be short-term and confined to the immediate work area (within approximately 25 feet). Incremental noise from construction vehicles and traffic noise would not represent a substantial increase in the context of the project surroundings and the existing noise levels, as discussed in Section 5.13 (Noise). As such, direct impacts from exposure to noise or vibration, fugitive dust, or exposure to hazardous materials would be reduced to less than significant.

Operational Impacts on Special-Status Wildlife

Once the proposed Project is constructed, SVP's existing maintenance and operations group would assume inspection, patrol, and maintenance duties. Project operation and maintenance activities could generate varying levels of human presence, lighting, and noise along the Project alignment and adjacent areas. Direct impacts to special-status species, if present during operations, could include exposure to increased levels of human presence, exposure to noise and night lighting generated from maintenance

activities, hazardous material spills, and collision with overhead electrical transmission lines or electrocution from overhead electrical equipment on utility poles.

Due to the urban/developed land cover and the regular disturbance experienced from urban anthropogenic activities, mowing, and vehicle and equipment movement and staging within or adjacent to the proposed Project area, it is more likely that special-status wildlife species adapted to developed or semi-developed environments would occur as resident species within or adjacent to the proposed Project area. The proposed Project primarily occurs along an existing overhead electrical distribution alignment subject to existing inspection, patrol, and maintenance activities conducted by Silicon Valley Power. As discussed in Section 5.13 (Noise), the occasional nature of maintenance noise due to implementation of the proposed Project would not result in noise levels in excess of standards established in the local general plan or noise ordinance. Permanent increases in ambient noise levels in the project vicinity would not occur, and the transmission and distribution system improvements would not generate a new or different source of permanent noise. Equipment associated with operation and maintenance of the proposed Project would not produce any groundborne noise or vibration; therefore, operation and maintenance of the project would result in no impact under this criterion. Other than substances associated with vehicles that would be used for inspections and maintenance, no hazardous materials are associated with maintenance and operation of the proposed Project. Therefore, impacts from an increased exposure to increased levels of human presence, exposure to noise and night lighting generated from maintenance activities, or hazardous material spills would be less than significant.

Power lines, communications towers, and other elevated structures are known to pose a threat to birds. The risk of bird collisions with power lines is influenced by a number of factors, including the type and size of bird, weather, visibility, season, surrounding habitat, and size, configuration, and placement of power lines (APLIC, 2012). Collisions with power lines are generally due to poor visibility of electrical lines, but collisions may also occur with other structures such as utility poles and substation structures. Collisions may occur in poor weather or visibility conditions, or when birds are startled and flushed from cover, fleeing from predators, or focused on pursuing prey.

Electrocution can occur when a bird perches, lands, or takes off from a utility pole if the animal makes contact with two conductors to complete the electrical circuit, or simultaneously contacts energized phase conductors and other equipment, or simultaneously contacts an energized wire and a grounded wire. Electrocution on power lines is a greater potential hazard to larger birds, such as raptors, because their body size and wingspan are large enough to span the distance between the conductor wires and thus complete the electrical circuit (APLIC, 2006).

To reduce potential collision and electrocution risks to birds and bats, the Project is being designed in compliance with current APLIC guidelines (APLIC, 2006) as described in Section 4 Project Description. These methods ensure a minimum separation between electrical components to prevent simultaneous contact and covering electrical components with protective materials to prevent contact. These incorporated Project designs would reduce impacts to birds from electrocution and collision to a less than significant level.

Mitigation Measure for Special-Status Wildlife Species

MM BIO-1 **Implement Worker Environmental Awareness Program.** Prior to and for the duration of any vegetation removal and trimming and any ground disturbing activities, SVP or its designee shall provide Worker Environmental Awareness Program (WEAP) training to all new personnel prior to beginning work on the Project. The training may be presented in the form of a video. The training program shall be developed by a qualified biologist to educate Project personnel about the Project's sensitive biological resources. The name and credentials of the qualified biologist shall be submitted to the City no less than 14 days prior to the surveys for review and approval. A draft of the training program (i.e.,

video and written materials) shall be submitted to the City no less than 14 days prior for approval prior to implementation. The WEAP shall include, at a minimum:

- An overview of the sensitive biological resources that are known or have the potential to occur in the Project area and surrounding habitat. This shall include nesting birds and special- plants and wildlife.
- An overview of the Project and Mitigation Monitoring and Reporting Program (MMRP), and the consequences of non-compliance with these requirements.
- An overview of the federal and State Endangered Species Acts, Migratory Bird Treaty Act, Bald and Golden Eagle Protection Act, pertinent Fish and Game Code sections, and other applicable regulatory requirements and the consequences of non-compliance with these requirements.
- Functions, responsibilities, and authority of the biological monitor(s) and how they interact with Project personnel.
- Identify clear points of contact for the biological monitor(s) and construction personnel including who to contact should workers have questions regarding compliance with environmental documents and permit conditions.
- Project restrictions, such as Environmentally Sensitive Habitat Areas (ESHAs), setbacks from sensitive biological resources, and avoidance buffers.
- Requirements to remain within authorized work areas and on approved access routes, with examples of flagging and signage used to designate these areas.
- Information on compliance with Project speed limits, control of litter and micro trash, smoking restrictions, wildfire minimization measures, spill containment and clean up, and the implementation of Best Management Practices.
- Explanation that wildlife must not be harmed or harassed including procedures for abiding by Project speed limits, covering pipes, securing excavations, and installing exit ramps to prevent wildlife entrapment.

Training acknowledgement forms shall be signed by each person attesting that they understand and will abide by Project requirements. Upon request, SVP or its designee shall provide the City the WEAP training acknowledgement forms for persons who have completed the training in the prior month and a running total of all persons who have completed the training to date.

MM BIO-2 **Biological Monitoring.** SVP or its designee shall retain a qualified biologist as biological monitor on the Project, to be approved by the City. If sensitive biological resources are identified during preconstruction surveys or incidentally, the qualified biologist will monitor Project work locations in proximity to sensitive biological resources weekly until biological resources are not found for one consecutive month, at which point weekly monitoring will cease. The qualified biologist shall be notified immediately if any nesting birds or other biological resources are discovered once construction begins. The qualified biologist will be the point of contact for any employee or contractor who might inadvertently kill or injure a special-status species or anyone who finds a dead, injured, or entrapped animal. The qualified biologist or biological monitor shall have the authority and responsibility to halt any Project activities that are not in compliance with applicable mitigation measures, permit conditions, or other Project requirements, or will have an unauthorized adverse effect on biological resources.

MM BIO-3 **Conduct Preconstruction Surveys for Special-Status Wildlife and Implement Avoidance Measures.** A qualified biologist shall conduct a preconstruction survey for each of the species identified below. These surveys can be combined if they meet the requirements outlined in this measure. The name and credentials of the qualified biologist shall be submitted to the City no less than 14 days prior to the surveys for review and approval. Within 14 days of completion of the surveys, the City shall be provided with a report describing the findings, including the date, time, and duration of the surveys; identity of the surveyor(s); a list of all common and special-status species observed; locations of any special-status species identified, including any established avoidance buffers; and any actions taken at the direction of the City in coordination with CDFW, and/or USFWS.

Bumble Bee: A preconstruction survey for Crotch's bumble bee and western bumble bee shall be conducted during the colony active period for each species (April through August) prior to project vegetation management and ground disturbing activities. The survey shall be conducted by a qualified entomologist or biologist familiar with the life history and ecology of special-status bumble bee species. The preconstruction survey for special-status bumble bees shall focus on the ruderal habitat within the utility right-of-way adjacent to the Northern Receiving Station and landscaped and ruderal land at the Montague Expressway interchange. The survey shall identify any potential foraging, nesting, and/or overwintering resources present within the Project work areas and a 50-foot buffer where legal access is available. If a potential active special-status bumble bee nest site is identified, a 50-foot avoidance buffer shall be clearly delineated with staking, flagging, and/or signage and Project activities will be prohibited from the area until it is determined that the nest is no longer potentially active. The qualified biologist shall notify the City for coordination with CDFW within 24 hours as further coordination may be required to avoid or mitigate impacts.

Burrowing Owl. No later than seven days prior to start of project vegetation management and ground disturbing activities, a qualified biologist shall conduct a preconstruction survey for burrowing owl. The survey shall include the focus areas (described below) plus a 250-foot buffer where legal access is available. The survey for burrowing owl shall focus on the ruderal habitat described for bumble bees above. If burrows or other structures are identified that contain signs of use by burrowing owl, or if burrowing owl(s) is observed, an avoidance buffer area shall be clearly delineated with staking, flagging, and/or signage. If during the nesting season (February 1 to August 31), a 250-foot avoidance buffer shall be established, and Project activities will be prohibited from the area until a qualified biologist determines it is occupied either by a non-mated pair or the young have fledged. If outside the nesting season, a 160-foot avoidance buffer shall be established. The prescribed buffers may be adjusted by the qualified avian biologist in coordination with the City and CDFW based on existing conditions around the burrow, planned construction activities, tolerance of the species at a given location, and other pertinent factors.

If avoidance of burrowing owls is not feasible and work will be conducted outside the nesting season, a Burrowing Owl Passive Relocation Plan shall be developed to provide detailed methods and guidance for passive relocation of burrowing owls. The Burrowing Owl Passive Relocation Plan shall be submitted to the City for approval in coordination with CDFW prior to conducting passive relocation. An occupied burrow may not be disturbed during the nesting season, unless a qualified biologist determines, by non-invasive methods, that it is not occupied by a mated pair. Passive relocation would include installation of one-way doors on burrow entrances that would let owls out of the burrow but would not let them back in. Once owls have been passively relocated, burrows will be

carefully excavated by hand and collapsed by, or under the direct supervision, of a qualified biologist.

Within 14 days of completion of the surveys, the City shall be provided with a report describing the findings, including the date, time, and duration of the surveys; identity of the surveyor(s); any established avoidance buffers in the event burrowing owls are documented to be present; and any actions taken at the direction of the City.

Western Pond Turtle: No later than seven days prior to start of project vegetation management and ground disturbing activities, a qualified biologist shall conduct a preconstruction survey for western pond turtle. The survey for western pond turtle shall focus on the ruderal habitat within the utility right-of-way southeast adjacent to the Northern Receiving Station.

Western pond turtle or other special-status wildlife found within the Project site during the surveys shall be allowed to leave on its own volition prior to the onset of construction. If species of special concern are found within the Project site during surveys and will not leave on its own volition, the species will be relocated to the nearest suitable habitat outside of the Project site. Species of special concern will only be handled by qualified personnel as authorized by CDFW and/or USFWS under an issued state scientific collecting permit (SCP), memorandum of understanding (MOU), or federal recovery permit. Impacts to federally or state-listed species or state-listing candidate species are not authorized. If any State or federally listed, candidate, or proposed species are detected work will be stopped and the applicant shall notify the City for coordination with CDFW and or USFWS, within 24-hours for further direction.

MM BIO-4 **Preconstruction Nesting Bird Surveys and Nest Protection.** ~~During the nesting season (February 1 to August 31)~~ If Project-related work is scheduled during the nesting season (typically February 15 to August 30 for small bird species such as passerines; January 15 to September 15 for owls; and February 15 to September 15 for other raptors), preconstruction nesting bird surveys shall be conducted on the site and vicinity by a qualified biologist no more than 7 days before any work activities, including any vegetation removal or trimming, are performed at a given Project location. The surveys shall be conducted following the sequential schedule of the linear Project in a manner that minimizes potential for the surveys to expire before the construction crews proceed to a new Project work location. The survey radii surrounding the work area shall be 250 feet for passerines and 500 feet for raptors. Surveyors will search for all potential nest types (e.g., ground, cavity, shrub/tree, structural, etc.) and determine whether the nest is active. A nest will be determined to be active if eggs or young are present in the nest. Upon discovery of active nests, the biological monitor will determine if there is need for a buffer or shield to minimize disturbance of the nest. Upon this determination and execution of any required minimization action, work may proceed. The extent of the determination will be based upon: acclimation of the species or individual to disturbance, nest type (cavity, tree, ground, etc.), and level and duration of construction activity. If there is a break in construction at a work location for a period of 14 or more days during nesting season, a new nesting bird survey shall be undertaken before construction is allowed to commence at that location, to determine if any nests have been established. Bird surveys are not required outside of the nesting season (February 1 to August 31).

In the unlikely event a special-status or listed species is found nesting nearby, CDFW and USFWS will be notified, and the City will be provided with nest survey results, if requested. When active nests are identified, monitoring for significant disturbance to the birds will

be implemented. Construction will not be allowed to continue unless the qualified biologist determines that no disturbance is occurring.

MM BIO-5 **Preconstruction Bat Survey and Implement Avoidance Measures.** A qualified biologist shall conduct surveys for special-status bats during the appropriate time of day to maximize detectability to determine if bat species are roosting in trees or other vegetation requiring removal or clearance pruning for the Project. The name and credentials of the qualified biologist shall be submitted to the City no less than 14 days prior to the surveys for review and approval. The survey shall occur no less than 7 days and no more than 14 days prior to beginning tree or other vegetation removal or trimming activities. Survey methodology may include visual surveys for bats (e.g., observation of bats emerging from roosts to forage), inspection for suitable roost habitat, bat sign (e.g, guano), or use of ultrasonic detectors (e.g., Anabat, etc). Visual surveys shall include all trees or other vegetation requiring removal or clearance pruning for the Project.

If evidence of bat use is observed, the approximate number and species of bats using the roost shall be determined. Bat detectors may be used to supplement survey efforts.

If roosts or a maternity colony are determined to be present, then a Bat Mitigation and Monitoring Plan (Plan) shall be prepared and implemented to mitigate for the loss of roosting habitat. The Plan shall include information pertaining to the species of bat and location of the roost, exclusion methods and roost removal procedures, compensatory mitigation for permanent impacts (including specific mitigation ratios and location of proposed mitigation) and monitoring to assess bat use of mitigation areas. This Plan shall be submitted to the City and CDFW for review and approval prior to project activities that could disturb roosting bats.

(b) Would the project have a substantial adverse effect on any riparian habitat or other sensitive natural community identified in local or regional plans, policies, and regulations or by the California Department of Fish and Wildlife or U.S. Fish and Wildlife Service?

NO IMPACT. Sensitive natural communities are communities that have limited distribution statewide or within a county or region and are often vulnerable to the environmental effects of projects. There is no riparian habitat or other sensitive natural community within the proposed Project area. No impacts would occur.

(c) Would the project have a substantial adverse effect on state or federally protected wetlands (including, but not limited to, marsh, vernal pool, coastal, etc.) either individually or in combination with the known or probable impacts of other activities through direct removal, filling, hydrological interruption, or other means?

NO IMPACT. The proposed Project area is highly urbanized and no waters or wetlands potentially under the jurisdiction of USACE, RWQCB, or CDFW occur on or adjacent to the proposed Project area. No impacts would occur.

(d) Would the project interfere substantially with the movement of any native resident or migratory fish or wildlife species or with established native resident or migratory wildlife corridors, or impede the use of wildlife nursery sites?

NO IMPACT. There are no established wildlife migratory corridors or nursery sites that would be directly impacted during construction or operation of the proposed Project. The proposed Project area is not located within any Essential Habitat Connectivity Areas or Natural Landscape Blocks as identified in the California Essential Habitat Connectivity Project, or within any Important Bird Areas identified by the National Audubon Society. (Caltrans and CDFW, 2010; NAS, 2023).

(e) Would the project conflict with any local policies or ordinances protecting biological resources, such as a tree preservation policy or ordinance?

LESS THAN SIGNIFICANT WITH MITIGATION INCORPORATED. The City's General Plan includes conservation goals and policies pertaining to biological resources. Incorporation of MM BIO-1 through MM BIO-5 reduces potential impacts to common and protected biological resources to less than significant and is in alignment with General Plan Conservation Goal 5.10.1 G1: "The protection of fish, wildlife and their habitats, including rare and endangered species" and Conservation Policy 5.10.1 P1: "Require environmental review prior to approval of any development with the potential to degrade the habitat of any threatened or endangered species."

There are no streams or riparian habitats located within or adjacent to the proposed Project area, therefore, the proposed Project will not impact these habitats and the proposed Project does not conflict with General Plan Conservation Goal 5.10.1 G2 or Conservation Policies 5.10.1 P2 or 5.10.1 P5.

As described in Section 4 Project Description, some vegetation and tree removal or tree trimming may be required for pole installation and vehicle access and to minimize the risk of fire by providing clearance between conductors and trees. The City Code has an ordinance (Santa Clara City Code §12.35) requiring a City permit for removing trees it defines as protected trees (§12.35.080). Additionally, the General Plan contains Conservation Policies pertaining to trees including 5.10.1 P3 (preservation of City-designated heritage trees) and 5.10.1 P4 (protection of large private and public right-of-way trees).

An arborist survey was conducted by an International Society of Arboriculture (ISA) certified arborist and an arborist report was prepared (see Appendix D). The arborist survey identified a total of 162 trees along the proposed Project area alignment, 85 of which qualify as "protected trees" under the City's General Plan and municipal code. No trees that the City designates as "Heritage trees" are present. Tree branches that are closer than 5 feet vertically or 10 feet horizontally to any conductor or wire would be trimmed to meet the minimum line clearance required by project engineers. The lowest conductor height would be approximately 35 to 40 feet above the ground. Under Option 1 of the proposed Project (entirely overhead), two protected trees are recommended for removal while 26 protected trees and seven additional non-protected trees may require clearance pruning. The two protected trees recommended for removal on Option 1 are located along Lafayette Street: tree #132, an olive tree located in the median approximately 470 feet northwest of Agnew Road; tree #177, a deodar cedar located on the east side of Lafayette Street across from Wyatt Drive. For Option 2 (underground and overhead combination), one protected tree is recommended for removal while 22 protected trees and 10 additional non-protected trees may require clearance pruning. The one protected tree recommended for removal on Option 2 is tree #177 as described above for Option 1. Protected trees recommended for clearance pruning for either Option 1 or Option 2 are scattered throughout the proposed Project area. The removal and clearance pruning of protected trees for the proposed Project would conflict with the City's General Plan conservation goals and policies and the City Code. As recommended in the arborist report in Appendix D, incorporation of MM BIO-6 will ensure the proposed Project complies with the local policies and ordinances by following the tree protection requirements and recommendations of the City arborist.

Mitigation Measures to Comply with Local Tree Policies and Ordinances

MM BIO 6: **Tree Protection Measures for Retained Trees.** To minimize the potential damage and ensure the long-term health, stability, and survival of retained trees, measures outlined in the Tree Protection Plan below shall be implemented.

<u>Tree Protection Zone</u>

- A Tree Protection Zone (TPZ) shall be defined by the City Arborist or City designated ISA Certified Arborist for all trees within 50 feet of any excavation that could be affected by Project activities and are intended for preservation. A TPZ will not be established for

trees within the project area that are not within this excavation zone. TPZ will be taken down once excavation work is completed within 50 feet. A TPZ will typically include all area within the dripline of trees to be retained.

- The TPZ will be protected by a fenced enclosure to prevent unauthorized access during project activities. Fencing shall be constructed of sturdy but open material (i.e., orange webbed construction fencing, chain-link) with a minimum height of 4 feet and secured in place. Warning signs (e.g. WARNING – Tree Protection Zone – This fence shall not be moved without approval by the City Arborist or a City designated arborist) shall be prominently displayed and visible from all sides of the TPZ fencing.
- TPZ fencing shall be installed prior to any demolition, grading, staging, stockpiling, or any other construction activities, and shall remain in place until all construction activities are complete.
- No construction, staging, or storage of materials, equipment or vehicles shall occur within the TPZ without advanced approval and oversight by the City Arborist or a City designated ISA Certified Arborist.
- No excess soil, excess concrete or concrete wash, chemicals, refuse or other waste shall be placed within the TPZ.
- The primary contractor shall be responsible for maintaining TPZ fencing and enforcing all TPZ guidelines outlined above throughout the course of the Project.

Site Grading, Excavation, and Trenching

- Soil disturbance or grade changes within a TPZ are not permitted unless approved by the City Arborist or a City designated arborist. Any approved grading, excavation or trench work within a TPZ will be field staked and inspected by the City Arborist or a City designated ISA Certified Arborist prior to implementation.
- All grading, excavation and trenching work within a TPZ shall be performed under the observation of a City Arborist or City designated ISA Certified Arborist.
- All grading shall be designed to provide positive drainage away from the base of trees to be preserved and shall not create ponding within a TPZ.
- Grade changes in the vicinity of trees to be preserved should remain as close to natural grade as possible.

Canopy Pruning

- To the extent possible, any necessary canopy pruning shall be completed prior to the commencement of construction activities.
- Pruning shall be performed by a qualified tree service worker under the direction of an ISA Certified Arborist following International Society of Arboriculture tree pruning best management practices. Pruning shall not be performed by construction personnel.

Root Pruning

- Any roots one inch and larger requiring removal shall be cut cleanly in sound tissue. No pruning seals or paint shall be used on wounds.
- Roots two inches and greater shall remain in place and undamaged to the extent practicable. If removal is required, cuts shall be made with the approval and under the direction of an ISA Certified Arborist.

Communication for Tree Protection Compliance

- A preconstruction meeting shall be arranged for the City Arborist or City designated ISA Certified Arborist to meet with the Project Planner, Project Contractors, Onsite Project Supervisors, Tree Pruning and Removal Contractor, and/or other appropriate Project Leads to review and secure a commitment to comply with all tree protection measures.

(f) Would the project conflict with the provisions of an adopted Habitat Conservation Plan, Natural Communities Conservation Plan, or other approved local, regional, or State habitat conservation plan?

NO IMPACT. The proposed Project area is not located within the boundaries of any Habitat Conservation Plan or Natural Communities Conservation Plan. The Project area and Survey Area are located outside the Permit Area for the Santa Clara Valley Habitat Plan. Therefore, there would be no impacts.

5.5. Cultural Resources

CULTURAL RESOURCES Would the project:	Potentially Significant Impact	Less Than Significant With Mitigation Incorporated	Less Than Significant Impact	No Impact
(a) Cause a substantial adverse change in the significance of a historical resource pursuant to §15064.5?	☐	☒	☐	☐
(b) Cause a substantial adverse change in the significance of an archaeological resource pursuant to §15064.5?	☐	☒	☐	☐
(c) Disturb any human remains, including those interred outside of dedicated cemeteries?	☐	☒	☐	☐

Significance criteria established by CEQA Guidelines, Appendix G.

5.5.1. Setting

This section describes the existing setting and the existing cultural resources in the Project area and discusses potential impacts associated with the proposed Project on cultural resources. Cultural resources are historic and prehistoric archaeological sites, historic-aged architectural or engineering features and structures, and places of traditional cultural significance to Native Americans and other ethnic groups.

5.5.1.1. Environmental Setting

The proposed Project is in the City of Santa Clara in Santa Clara County, CA. The Project area is a fully developed urban area and includes several existing transmission lines, including lines owned by SVP and PG&E. The proposed Project would be located in Section 27, Township 6S, Range 1W, Mount Diablo Meridian. The Project area includes residential, commercial, and industrial land uses. Existing SVP transmission and distribution power lines are located near and within the Project right-of-way (ROW). North of Bayshore Freeway/Highway 101, land uses are primarily residential, with single and multi-family homes, and with commercial and industrial uses south of Montague Expressway and west of Lafayette Street. South of Bayshore Freeway/Highway 101, land uses are primarily light industrial uses and low-rise office buildings.

5.5.1.2. Historic Context

Prehistory

Paleoindian Period (11,500–4,500 years before present [BP]). Native American occupation and use of the Santa Clara Valley began around 11,000 BP. Natural environmental changes to the Bay Area landscape have occurred since humans' first arrival. Many of the landforms originally available for human habitation in prehistory were inundated as sea levels rose and flooded the Franciscan Valley, burying sites with sediments. Since the earliest systematic studies of central California and Bay Area archaeology in the 1950s, researchers have recognized that a significant portion of the archaeological record is buried in the fans and massive alluvial plains of the lowland valleys (Heizer, 1949, 1950, 1952; Heizer and Cook, 1953; Lillard et al., 1939; Meighan, 1965).

The earliest cultures of the Paleoindian/Early Holocene Period are generally considered to be represented by wide-ranging mobile hunters and gatherers. Throughout California, the Paleoindian sites are most often represented by isolated fluted projectile points, although sites dating to this time period in the Bay Area are sparse. The Coyote Narrows (CA-SCR-177) and the Metcalf Creek Site (CA-SCL-178) sites in the Santa Clara Valley, are considered two of the oldest cultural deposits in the Bay Area. They were discovered in buried soil and dated between 11,000 and 9,500 years old (Fitzgerald and Porcasi, 2003; Hildebrandt, 1983).

Early Horizon (4,500–3,500 BP). The Early Horizon period is characterized by a mobile forager pattern throughout the Bay Area. The milling slab and handstone, as well as a variety of large, wide-stemmed and leaf-shaped projectile points, all emerged during this period. Local Franciscan chert dominated the Early Holocene components in the Santa Clara Valley. The Metcalf Creek Site (CA-SCL-178) yielded cultural materials as deep as 9 meters below the surface (Fitzgerald and Porcasi, 2003). New groundstone technology and the first cut shell beads in mortuaries signal a more sedentary life, regional symbolic integration, and increased regional trade in the Bay Area, beginning at about 3,500 BP, signaling the end of the Early Horizon.

Middle Horizon (3,500–1,500 BP). Sites of the Middle Horizon period are more common throughout the Santa Clara Valley. These sites usually have deep, stratified deposits that contain large quantities of ash, charcoal, fire-altered rock, fish, bird, and mammal remains. The presence of significant numbers of mortars and pestles suggests a growing reliance upon gathered plant foods as opposed to hunted animal foods. An increase in violence is suggested by the number of Middle Horizon burials found with projectile points embedded in the bones or with other physical markers of violence (Fitzgerald, 1991).

Late Horizon Period (1,500 BP–A.D. 1769). Late Horizon sites are the most numerous and are composed of extensive midden deposits, indicating a more sedentary lifestyle. Important mound/ midden sites along the Peninsula margins include the University Village site (CA-SMA-77), the San Bruno Mountain mound (CA-SMA-40), and the Ynigo Mound (CA-SCL-12/H). Several technological and social developments characterize the Late Horizon period such as the introduction of the bow and arrow, which replaced the atlatl and dart. Dietary emphasis on acorns and seeds is prevalent in the materials recovered from excavated sites. This change from hunter-gatherers to an increased sedentary lifestyle is due both to more efficient resource procurement as well as a focus on staple food exploitation, the increased ability to store food at village locations, and the development of increasingly complex social and political systems including long-distance trade networks (Clark, 1989; Levy, 1978).

Ethnography

A review of the ethnographic context for the Project area is presented in Section 5.18, Tribal Cultural Resources.

Regional History

The Historic Period of the Santa Clara Valley is generally divided into three major periods: the Spanish period (1777–1821), the Mexican period (1822–1848), and the American period (1848–present).

Spanish Period (A.D. 1777–1821). Spanish explorers in the late 1760s and 1770s were the first Europeans to traverse the Santa Clara Valley. The first party, led by Gaspar de Portola and Father Juan Crespi, arrived in the Alviso–San Jose area in the fall of 1769. The following year, Pedro Fages led another party through the Santa Clara Valley, and in 1772 Fages returned to the same vicinity with Crespi. In 1776, the exploration party of Juan Bautista de Anza and Father Pedro Font traveled through the Santa Clara Valley. The favorable reports of Anza and Font led to the establishment of both Mission Santa Clara and the Pueblo San Jose de Guadalupe in 1777 (Hart, 1987; Winther, 1935; Cutter, 1978).

Mexican Period (A.D. 1822–1848). The 1822 Mexican revolt against Spain followed by the 1834 secularization of the missions changed land ownership patterns in the Santa Clara Valley. The Spanish philosophy of governance was directed at the founding of presidios, missions, and secular towns, with the land held by the Crown. In contrast, the later Mexican policy stressed individual ownership of the land. During the Mexican Period, vast tracts of land, including former mission lands that had reverted to public domain, were granted to individuals (Broek, 1932; Hendry and Bowman, 1940; Hart, 1987).

American Period (A.D. 1848–Present). The population of the Santa Clara Valley began to expand significantly following the 1848 Gold Rush; further population expansion resulted during construction of the

railroad to San Francisco in 1864 and the completion of the transcontinental railroad in 1869 (Findlay and Garaventa, 1983). Throughout the late nineteenth century rancho, pueblo, and mission lands in the Santa Clara Valley were subdivided as the result of population growth, Anglo-American takeover, and the confirmation of property titles. Large cattle ranches were converted to farming of crops; this agricultural land-use pattern continued throughout the American Period. During this period, agricultural experimentation took place. After 1875, the success of many agricultural experiments and expanded access to markets via rail encouraged the development of fruit production in the Santa Clara Valley. From 1875 onward, the expanding fruit market led to innovations in fruit preservation and shipping, including: drying fruit, canning fruit, and shipping fresh fruit in refrigerated cars. This created a wider economic boom that attracted new residents to the Santa Clara Valley (Broek, 1932; Winther, 1935). The City of San Jose served as the County seat, a primary service, financial and social center. Since the 1990s, the agrarian land-use pattern has been displaced by residential housing, commercial centers, and the development of research and manufacturing facilities associated with the electronics industry. The contemporary focus on technological advancement resulted in the designation of the general region as the "Silicon Valley."

5.5.1.3. Records Search

Aspen submitted a California Historical Resources (CHRIS) Data Request for the Project to the Northwest Information Center at Sonoma State University requesting data within 125-foot radius of the Project area. On April 9, 2024, the results were received identifying one previously recorded resource/site within 125-foot radius of the Project area, a historic-age site consisting of buildings and structures. This resource does not fall within the Project area and will not be impacted. Additionally, a review of the CA Built Environment Resource Directory and National Register of Historic Places identified the Agnes State Hospital campus as being directly adjacent to the Project area and will not be impacted by the Project. Lastly, the record search identified a total of 26 cultural resources studies that have been conducted within 125-foot radius of the Project area. Of these 26 studies, 20 of them include all or a portion of the Project area (Table 5.5-1).

The records search included a review of the following registers and lists.

- National Register of Historic Places (NRHP)
- California Register of Historic Resources (CRHR)
- California State Historical Landmarks
- California Points of Historical Interest
- California Inventory of Historic Resources
- Santa Clara County Heritage Resource Inventory
- California Built Environment Resource Directory (BERD)
- City of Santa Clara Historic Survey Complete Report – 1981

Table 5.5-1. Cultural Resources Reports Within Project Area

Report No.	Author	Year	Study
S-004486	Marianne Fazio	1978	Field reconnaissance of parcels along Mission College Boulevard in Santa Clara (letter report)
S-006066	N/A	1983	Data Recovery Plan for the Guadalupe Corridor Transportation Project, Santa Clara County, California
S-008387	David Chavez	1980	Archaeological Resources Assessment for the Guadalupe Corridor Alternatives Analysis Draft Environmental Impact Statement: Santa Clara County, California
S-014230	Robert Cartier, Allika Ruby, Jason Bass, and Mike Kelley	1992	Evaluation of Archaeological Resources for the San Jose/Santa Clara Nonpotable Water Reclamation Project

Report No.	Author	Year	Study
S-018367	Mark Hylkema	1995	Historic Property Survey Report and Finding of No Effect for the Proposed Ramp Metering and HOV Ramp Project, 4-SCL-101 PM 40.0/52.5, EA 132451
S-018377	Robert Cartier, Lynne Eckert, Jeanne Goetz, and Jon Reddington	1996	Cultural Resource Evaluation of the Santa Clara Pipe Alignment for the South Bay Water Recycling Project
S-019072	Colin I. Busby, Donna M. Garaventa, Melody E. Tannam, and Stuart A. Guedon	1996	Historic Properties Treatment Plan, South Bay Water Recycling Program.
S-019424	John Holson	1997	Cultural Resources Survey for the Los Esteros Project, Santa Clara County (letter report)
S-020691	Miley P. Holman	1997	Archaeological Field Inspection of the City of Santa Clara Northern Receiving Station, Santa Clara, Santa Clara County, California (letter report)
S-021137	Michael R. Corbett and Stuart A. Guedon	1996	Archaeological Resources Review, Agnews West Campus, City of Santa Clara, Santa Clara County, California
S-022705	Hannah Ballard, John Holson, and Stephanie Pau	2000	Archaeological Survey and Record Search Results for the MCI WorldCom: Fremont, San Jose 12, San Mateo, and Santa Clara Fiber Optic Segments in Alameda, San Mateo and Santa Clara Counties, California
S-022725	Hannah Ballard, John Holson, and Stephanie Pau	2000	Archaeological Survey and Record Search Results for the Fourteen Broadwing Bay Area Fiber Optic Segments, California: Final Report
S-023356	Ward Hill	1999	Historic Property Survey Report, Montague Expressway Project, Cities of Santa Clara, San Jose and Milpitas, Santa Clara County, California
S-023400	N/A	2000	Addendum No. 1: Cultural Resources Assessment, PG&E Proposed Northeast San Jose Transmission Reinforcement Project
S-024980	Colin I. Busby	2000	Sun Microsystems Santa Clara Campus Project, Agnews West Campus, Archaeological Monitoring Closure Report, Phase 1 (July 1998 to December 1999) (letter report)
S-028016	Colin I. Busby	2002	Agnews (West) Family Housing, Rivermark Master Plan Parcel 26, Currently Vacant Parcel, City of Santa Clara, Santa Clara County, Archaeological Monitoring Closure Report (letter report)
S-033061	Nancy Sikes, Cindy Arrington, Bryon Bass, Chris Corey, Kevin Hunt, Steve O'Neil, Catherine Pruett, Tony Sawyer, Michael Tuma, Leslie Wagner, and Alex Wesson	2006	Cultural Resources Final Report of Monitoring and Findings for the Qwest Network Construction Project, State of California
S-036715	N/A	2009	Historic Property Survey Report/Finding of Effect, South Bay Water Recycling (SBWR) Stimulus Projects, Santa Clara Industrial 1, City of Santa Clara, Santa Clara County
S-039040	N/A	2008	Archaeological Assessment Report, 49ers Stadium Project - Santa Clara, Santa Clara County
S-045670	Kathleen Kubal	2014	Historic Property Survey Report, US 101 Express Lanes Project, Santa Clara County, California, Project No. 0412000459/EA 2G7100, 04-SCL-101 PM 16.00/52.55, 04-SCL-85 PM 23.0/24.1

Report No.	Author	Year	Study
S-004486	Marianne Fazio	1978	Field reconnaissance of parcels along Mission College Boulevard in Santa Clara (letter report)
S-006066	N/A	1983	Data Recovery Plan for the Guadalupe Corridor Transportation Project, Santa Clara County, California
S-008387	David Chavez	1980	Archaeological Resources Assessment for the Guadalupe Corridor Alternatives Analysis Draft Environmental Impact Statement: Santa Clara County, California
S-014230	Robert Cartier, Allika Ruby, Jason Bass, and Mike Kelley	1992	Evaluation of Archaeological Resources for the San Jose/Santa Clara Nonpotable Water Reclamation Project
S-018367	Mark Hylkema	1995	Historic Property Survey Report and Finding of No Effect for the Proposed Ramp Metering and HOV Ramp Project, 4-SCL-101 PM 40.0/52.5, EA 132451
S-018377	Robert Cartier, Lynne Eckert, Jeanne Goetz, and Jon Reddington	1996	Cultural Resource Evaluation of the Santa Clara Pipe Alignment for the South Bay Water Recycling Project
S-019072	Colin I. Busby, Donna M. Garaventa, Melody E. Tannam, and Stuart A. Guedon	1996	Historic Properties Treatment Plan, South Bay Water Recycling Program.

5.5.1.4. Native American Heritage Commission and Native American Consultation

A search of the Sacred Lands File database from the Native American Heritage Commission (NAHC) in Sacramento, California, was conducted. The record search of the NAHC Sacred Lands File was completed with negative results (i.e., no records found). Assembly Bill 52 Native American consultation is discussed in Section 5.18 (Tribal Cultural Resources).

5.5.1.5. Regulatory Background

State

State of California CEQA Guidelines. State of California CEQA Guidelines require that historical resources and unique archaeological resources be considered during the CEQA review process (CEQA Guidelines §15064.5; PRC §21083.2). If feasible, adverse effects to the significance of historical resources must be avoided or the effects mitigated (CEQA Guidelines §15064.5(b)(4)). State CEQA Guidelines require that all feasible mitigation be undertaken even if the prescribed mitigation does not mitigate impacts to a less than significant level (California Office of Historic Preservation (OHP) 2001b:6).

The term that CEQA uses for significant cultural resources is "historical resource," which is defined as a resource that meets one or more of the following criteria: (1) listed in, or determined eligible for listing in, the California Register of Historical Resources (California Register); (2) listed in a local register of historical resources as defined in PRC Section 5020.1(k); (3) identified as significant in a historical resource survey meeting the requirements of PRC Section 5024.1(g); or (4) determined to be a historical resource by a project's lead agency (PRC Section 21084.1 and State CEQA Guidelines §15064.5(a)). A historical resource consists of:

> *Any object, building, structure, site, area, place, record, or manuscript which a lead agency determines to be historically significant or significant in the architectural, engineering, scientific, economic, agricultural, educational, social, political, military, or cultural annals of California…. Generally, a resource shall be considered by the lead agency to be 'historically significant' if the resource meets the criteria for listing on the California Register of Historical Resources (§15064.5(b)(3)).*

CEQA Guidelines Section 15064.5(a)(3). In accordance with CEQA Guidelines Section 15064.5(b), a project with an effect that may cause a substantial adverse change in the significance of a historical resource is a significant effect on the environment.

CEQA requires a lead agency to determine if an archaeological resource meets the definition of a historical resource, a unique archaeological resource, or neither (CEQA Guidelines §15064.5(c)). Prior to considering potential impacts, the lead agency must determine whether an archaeological resource meets the definition of a historical resource in CEQA Guidelines §15064.5(c)(1). If the archaeological resource meets the definition of a historical resource, then it is treated like any other type of historical resource in accordance with CEQA Guidelines §15126.4. If the archaeological resource does not meet the definition of a historical resource, then the lead agency determines whether it meets the definition of a unique archaeological resource as defined in CEQA Statutes §21083.2(g). In practice, most archaeological sites that meet the definition of a unique archaeological resource also meet the definition of a historical resource. If the archaeological resource meets the definition of a unique archaeological resource, then it must be treated in accordance with CEQA Statutes §21083.2. If the archaeological resource does not meet the definition of a historical resource or a unique archaeological resource, then effects to the resource are not considered significant effects on the environment (CEQA Guidelines §15064.5(c)(4)).

California Health and Safety Code Section 7050.5. California HSC Section 7050.5 states that in the event of discovery or recognition of any human remains in any location other than a dedicated cemetery, there shall be no further excavation or disturbance of the site or any nearby area reasonably suspected to overlie adjacent remains until the coroner of the county in which the remains are discovered has determined whether or not the remains are subject to the coroner's authority. If the human remains are of Native American origin, the County Coroner must notify the Native American Heritage Commission (NAHC) within 24 hours of this identification. The NAHC will identify a Native American Most Likely Descendant (MLD) to inspect the site and provide recommendations for the proper treatment of the remains and associated grave goods.

Public Resources Code Section 5097.5. PRC Section 5097.5 provides for the protection of cultural resources. This PRC section prohibits the removal, destruction, injury, or defacement of archaeological features on any lands under the jurisdiction of State or local authorities.

California Register of Historical Resources Criteria of Evaluation. The State of California Historical Resources Commission has designed the California Register for use by State and local agencies, private groups, and citizens to identify, evaluate, register, and protect California's historical resources. The California Register is the authoritative guide to the State's significant historical and archaeological resources.

The California Register program encourages public recognition and protection of resources of architectural, historical, archaeological, and cultural significance, identifies historical resources for state and local planning purposes, determines eligibility for State historic preservation grant funding, and affords certain protections under CEQA. The following criteria are used when determining if a particular resource has architectural, historical, archaeological, or cultural significance.

- **Criterion 1:** Is the resource associated with events that have made a significant contribution to the broad patterns of local or regional history or the cultural heritage of California or the United States?
- **Criterion 2:** Is the resource associated with the lives of persons important to local, California, or national history?
- **Criterion 3:** Does the resource embody the distinctive characteristics of a type, period, region, method of construction, or represent the work of a master or possesses high artistic values?
- **Criterion 4:** Has the resource yielded, or have the potential to yield, information important to the prehistory or history of the local area, California, or the nation?

Local

City of Santa Clara General Plan (2010-2035). The City of Santa Clara's current General Plan provides information to the community to define acceptable development. It is a guide for decisions by the City Council, Planning Commission, and other government agencies on specific development applications. The following overarching Goals and Policies are identified with regard to architectural and built environment resources:

City of Santa Clara Historical and Landmarks Commission. To support its historic preservation goals, the City established a Historical and Landmarks Commission and obtained recognition by the State Office of Historic Preservation as a Certified Local Government (CLG). The Historical and Landmarks Commission advises the City Council on all matters pertaining to historical landmarks, names, and renaming of streets, museums and the establishment thereof in the City, and in the marking and preservation of historical landmarks and places. As required by the State CLG program, the City has established a list of Architecturally or Historically Significant Properties, which is the foundation for the Commission's recommendations. The Criteria for Local Significance establishes evaluation measures, to ensure that the resource is at least 50 years old and that the property is associated with an important individual or event, an architectural innovation, and/or an archaeological contribution in order to be deemed significant. The City maintains a list of qualified historic consultants for these evaluations.

Architecturally or Historically Significant Properties refer to prehistoric and historic features, structures, sites or properties that represent important aspects of the City's heritage. Historic Preservation policies strengthen the City's Historic Preservation Goals, providing direction for changes to historic resources and new development proposed within 100 feet of historic properties in order to evaluate any potential effects on the historic context for the resource. A 100–foot radius, defined as the Area of Historic Sensitivity, is approximately equal to all properties abutting, across the street, and adjacent to abutting properties from a historic resource. This would comprise a little less than a typical city block. Preservation of Santa Clara's long history is also supported by policies that protect archaeological resources, such as relics found in burial sites.

City of Santa Clara Criteria for Local Significance. The Criteria for Local Significance were adopted on April 8, 2004, by the City of Santa Clara City Council. These criteria establish evaluation measures that help to determine significance for properties not yet included on the historic list. Any building, site, or property in the City that is 50 years old or older and meets certain criteria of architectural, cultural, historical, geographical or archeological significance is potentially eligible. As buildings and other resources age, additional properties will be added to the inventory. In order to accomplish this, a property owner can apply to have their property listed as a historic resource or the City can nominate properties. The Historical and Landmarks Commission evaluates these applications and forwards a recommendation to the City council. Updates to the Historic Preservation and Resource Inventory require an amendment to the General Plan.

- **Criteria for Historical or Cultural Significance**. To be historically or culturally significant, a property must meet at least one of the following criteria:
  1. The site, building or property has character, interest, integrity and reflects the heritage and cultural development of the city, region, State, or nation.
  2. The property is associated with a historical event.
  3. The property is associated with an important individual or group who contributed in a significant way to the political, social and/or cultural life of the community.
  4. The property is associated with a significant industrial, institutional, commercial, agricultural, or transportation activity.

5. A building's direct association with broad patterns of local area history, including development and settlement patterns, early or important transportation routes or social, political, or economic trends and activities.
6. Included is the recognition of urban street pattern and infrastructure.
7. A notable historical relationship between a site, building, or property's site and its immediate environment, including original native trees, topographical features, outbuildings or agricultural setting.

- **Criteria for Architectural Significance.** To be architecturally significant, a property must meet at least one of the following criteria:

1. The property characterizes an architectural style associated with a particular era and/or ethnic group.
2. The property is identified with a particular architect, master builder or craftsman.
3. The property is architecturally unique or innovative.
4. The property has a strong or unique relationship to other areas potentially eligible for preservation because of architectural significance.
5. The property has a visual symbolic meaning or appeal for the community.
6. A building's unique or uncommon building materials, or its historically early or innovative method of construction or assembly.
7. A building's notable or special attributes of an aesthetic or functional nature. These may include massing, proportion, materials, details, fenestration, ornamentation, artwork or functional layout.

- **Criteria for Geographic Significance.** To be geographically significant, a property must meet at least one of the following criteria:

1. A neighborhood, group or unique area directly associated with broad patterns of local area history.
2. A building's continuity and compatibility with adjacent buildings and/or visual contribution to a group of similar buildings.
3. An intact, historical landscape or landscape features associated with an existing building.
4. A notable use of landscaping design in conjunction with an existing building.

5.5.2. Environmental Impacts and Mitigation Measures

(a) Would the project cause a substantial adverse change in the significance of an historical resource pursuant to §15064.5 [§15064.5 generally defines historical resource under CEQA]?

LESS THAN SIGNIFICANT WITH MITIGATION INCORPORATED. The record search did not identify any resources that meet the definition of a historical resource within the Project area, thus no known historical resources will be impacted. Although no known historical resources have been identified within the Project area, there remains the possibility that presently unidentified historical resources exist below the ground surface, as both Project options involve some level of ground disturbance. Unknown buried resources could be damaged or destroyed during ground disturbing work, which would constitute a significant impact absent mitigation. Implementation of mitigation measure MM CR-1 would evaluate and protect unanticipated discoveries, thereby reducing this impact to less than significant.

MM CR-1 **Worker Training and Management of Unanticipated Discoveries of Historical Resources, Unique Archaeological Resources.** SVP shall conduct a worker environmental awareness program (WEAP) for Project personnel who might encounter or alter historical resources or important/unique archaeological materials during Project work. This program may be combined with any similar required program, such as for biological resources. The WEAP will include a kickoff tailgate session that describes how to identify cultural resources and

what to do if an unanticipated discovery is made during construction, presents site avoidance requirements and procedures to be followed if unanticipated cultural resources are discovered during Project construction, and includes a discussion of disciplinary and other actions that could be taken against persons violating historic preservation laws and SVP policies.

If previously unidentified cultural resources are identified during construction, construction work within 50 feet of the find shall be halted and directed away from the discovery until a Secretary of the Interior qualified archaeologist assesses the significance of the resource. The archaeologist, in consultation with the City, any interested Tribes, and any other responsible public agency, shall make the necessary plans for treatment of the find(s) and for the evaluation and mitigation of impacts if the finds are found to be eligible to the California Register, qualify as a unique archaeological resource under California Environmental Quality Act Section 21083.2, or are determined to be tribal cultural resource as defined in Section 21074.

(b) Would the project cause a substantial adverse change in the significance of an archaeological resource pursuant to §15064.5?

LESS THAN SIGNIFICANT WITH MITIGATION INCORPORATED. Although no known archaeological resources have been previously identified within the Project area, there remains the possibility that presently unidentified archaeological resources exist below the ground surface as both Project options involve some level of ground disturbance. Unknown buried archaeological resources could be discovered and damaged or destroyed during ground disturbing work, which would constitute a significant impact absent mitigation. Implementation of mitigation measure MM CR-1 would evaluate and protect unanticipated discoveries of archaeological resources, thereby reducing this potential impact to a less than significant level.

MM CR-1 **Worker Training and Management of Unanticipated Discoveries of Historical Resources, Unique Archaeological Resources.** [see full text under Item (a) above.]

(c) Would the project disturb any human remains, including those interred outside of formal cemeteries?

LESS THAN SIGNIFICANT WITH MITIGATION INCORPORATED. There is no indication that human remains are present within the Project area. Background archival research failed to find any potential for human remains (e.g., existence of formal cemeteries) in the area. However, with both Project options involving some level of ground disturbance, it is possible that previously unknown human remains could be discovered and damaged or destroyed during ground disturbance, which would constitute a significant impact absent mitigation. Implementation of mitigation measure MM CR-2, which requires evaluation, protection, and appropriate disposition of human remains, would reduce this potential impact to a less than significant level.

MM CR-2 **Treatment of Human Remains.** Any human remains discovered are to be treated with respect and dignity. Upon discovery of human remains, all work within 50 feet of the discovery area must cease immediately, nothing is to be disturbed, and the area must be secured. The Santa Clara County Coroner's Office must be called. The Coroner has two working days to examine the remains after notification. The appropriate land manager of the site is to be called and informed of the discovery. It is very important that the suspected remains, and the area around them, are undisturbed and the proper authorities called to the scene as soon as possible, as it could be a crime scene. The Coroner will determine if the remains are archaeological/historic or of modern origin and if there are any criminal or jurisdictional questions.

After the Coroner has determined the remains are archaeological/historic-era, the Coroner will make recommendations concerning the treatment and disposition of the remains to the person responsible for the excavation, or to his or her authorized representative. If the Coroner believes the remains to be those of a Native American, he/she shall contact the Native American Heritage Commission (NAHC) by telephone within 24 hours.

The NAHC will immediately notify the person it believes to be the most likely descendant (MLD) of the remains. The MLD has 48 hours to make recommendations to the landowner for treatment or disposition of the human remains. If the descendant does not make recommendations within 48 hours, the landowner shall reinter the remains in an area of the property secure from further disturbance. If the landowner does not accept the descendant's recommendations, the owner or the descendant may request mediation by NAHC.

According to the California Health and Safety Code, six (6) or more human burials at one (1) location constitute a cemetery (Section 8100), and willful disturbance of human remains is a felony (Section 7052).

5.6. Energy

ENERGY Would the project:	Potentially Significant Impact	Less Than Significant With Mitigation Incorporated	Less Than Significant Impact	No Impact
(a) Result in potentially significant environmental impact due to wasteful, inefficient, or unnecessary consumption of energy resources, during project construction or operation?	☐	☐	☒	☐
(b) Conflict with or obstruct a state or local plan for renewable energy or energy efficiency?	☐	☐	☒	☐

Significance criteria established by CEQA Guidelines, Appendix G.

5.6.1. Setting

Silicon Valley Power, the City of Santa Clara's municipal electric utility, owns power generation facilities, has investments in joint ventures that produce electric power, and trades power on the open market. These efforts are directed toward ensuring its retail electricity customers (the citizens, organizations, and businesses of the City of Santa Clara) a highly reliable source of electric power at low, stable rates (City of Santa Clara, 2024).

SVP is proposing to construct approximately 2.24 miles of a new overhead and/or partially underground 115 kV transmission line. The NRS to KRS 115 kV Transmission Line Project would be built to accommodate energization at 230 kV, however it would initially be operated at 115 kV. The SVP electric load has been growing in recent years, as evidenced by electricity consumption data gathered by the California Energy Commission shown in Table 5.6-1 (CEC, 2023a).

Table 5.6-1. Electricity Consumption for Load Served by SVP (million kWh per year)

Sector, Served by SVP	2018	2019	2020	2021	2021
Ag & Water Pump	0.03	0.08	0.10	0.09	0.09
Commercial Building	2393.16	2437.06	2547.24	2835.04	3164.39
Commercial Other	41.52	43.80	44.25	42.40	39.10
Industry	862.57	821.66	816.73	835.54	852.06
Mining & Construction	24.74	35.63	46.50	73.54	96.72
Residential	226.01	234.49	264.73	241.90	261.80
Streetlight	3.50	3.00	3.00	4.39	4.39
Total Electricity Consumption	3551.53	3575.73	3722.54	4032.90	4418.54

Note: Usage expressed in millions of kWh (one million kWh equals one gigawatt-hour or GWh).
Source: CEC, 2024; Electricity Consumption by Entity.

Regulatory Background

Energy Action Plan and Loading Order. California has mandated and implemented aggressive energy-use reduction programs for electricity and other resources. In 2003, California's first Energy Action Plan (EAP) established a high-level, coherent approach to meeting California's electricity and natural gas needs and set forth the "loading order" to address California's future energy needs. The "loading order" established that the state, in meeting its energy needs, would invest first in energy efficiency and demand-side resources, followed by renewable resources, and only then in clean conventional electricity supply (CPUC, 2008). Since that time, the California Public Utilities Commission (CPUC) and California Energy Commission (CEC) have overseen the plans, policies, and programs for prioritizing the preferred resources, including energy efficiency and renewable energy.

California's Renewables Portfolio Standard (RPS). Electric utilities in California must procure a minimum quantity of the electricity sales from eligible renewable energy resources as specified by RPS requirements. The most-recent update to the RPS targets was in 2018, with the "100 Percent Clean Energy Act of 2018" [Senate Bill 100 (SB 100)], which establishes the policy that eligible renewable energy resources and zero-carbon resources supply 100 percent of retail sales of electricity to California end-use customers by December 31, 2045. SB 100 requires the CPUC and CEC to ensure that implementation of this policy does not cause or contribute to greenhouse gas emissions increases elsewhere in the western power grid.

Integrated Resource Planning. An Integrated Resource Plan (IRP) is an electricity system planning document that lays out the energy resource needs, policy goals, physical and operational constraints, and the general priorities or proposed resource choices of an electric utility, including customer-side preferred resources. Through Senate Bill 350 (De León, Chapter 547, Statutes of 2015) (SB 350), the publicly owned utilities (POU) such as SVP must adopt and file an IRP that is subject to a review by the CEC for consistency with statewide targets for energy efficiency, renewable resources, and greenhouse gas emissions reductions. The IRP must also consider how renewable generation, grid operational efficiencies, energy storage, and distributed resources (including energy efficiency) serve to meet the peak hour energy and reliability needs. On December 5, 2023, the City Council approved SVP's most-recent IRP (SVP, 2023), and SVP transmitted the 2023 IRP to the CEC for review in May 2024.

State CEQA Guidelines. The California Natural Resources Agency adopted certain amendments to the State CEQA Guidelines effective in 2019, to change how CEQA Lead Agencies consider the environmental impacts of energy use. CEQA Guidelines Section 15126.2(b) and Appendix F require analysis of a project's energy use to assure that energy implications are considered in project decisions. CEQA requires a discussion of the potential environmental effects of energy resources used by projects, with particular emphasis on avoiding or reducing the "wasteful, inefficient, and unnecessary consumption of energy" (see Public Resources Code section 21100(b)(3)).

5.6.2. Environmental Impacts and Mitigation Measures

(a) Would the project result in potentially significant environmental impact due to wasteful, inefficient, or unnecessary consumption of energy resources, during project construction or operation?

LESS THAN SIGNIFICANT. Construction activities would consume nonrenewable energy resources, primarily petroleum-based transportation fuels (diesel and gasoline), to power construction equipment and vehicles. The short-term use of fuels by equipment and motor vehicle trips during construction would be necessary to install the transmission line. The total energy requirements during construction are not quantified within the Project Description. However, the use of nonrenewable resources can be estimated in terms of the volumes of diesel and gasoline, by reviewing the products of combustion of these fuels (e.g., the quantities of greenhouse gases would be directly proportional to the volumes of fuels used). Based on the anticipated quantities of carbon dioxide equivalent (CO2e) emissions estimated as 641 metric tons of CO2e (in Section 5.8, Greenhouse Gas Emissions), approximately 63,000 gallons of diesel fuel[5] would likely be used for Project construction over approximately 14 months.

To put these volumes into perspective, data from the CEC indicate that California's refineries normally produce around 2.0 million barrels per week of diesel and 6.2 million barrels per week of gasoline (CEC, 2023b). This amounts to statewide production of roughly 12 million gallons of diesel and 37.2 million gallons of gasoline each day. In comparison, the total diesel fuel volume used during the entirety of Project construction (63,000 gallons) would represent less than a percent of California's typical daily production volume (12 million gallons per day).

[5] Note: The volume of diesel fuel used can be approximated from an emission factor of 10.2 kg CO2 per gallon, based on the fuel heating value (0.138 million British thermal units per gallon) multiplied by the default CO2 emission factor (73.96 kg CO2 per million British thermal unit), in Table 2-3 of Title 17, California Code of Regulations, Section 95115.

Operations, including inspection, patrol, and maintenance of the Project components would also require use of fossil fuel resources for routine upkeep. The energy used by the Project during construction and operation would not be wasteful, inefficient, or unnecessary considering the new facilities that would increase system reliability, and no potentially significant environmental impact would occur due to the direct or indirect energy consumption of the Project.

(b) Would the project conflict with or obstruct a state or local plan for renewable energy or energy efficiency?

LESS THAN SIGNIFICANT. The proposed Project would increase SVP's system capacity and reliability. The transmission line will allow energy to be balanced and redistributed within SVP's transmission receiving stations. This line will allow SVP to serve the new load growth that is projected based on SVP's forecasted load growth within the City over the next several years. The Project would neither conflict with nor obstruct state or local plans for renewable energy or energy efficiency, and, therefore, would have no impact on those plans. This impact would be less than significant, and no mitigation is required.

5.7. Geology and Soils

GEOLOGY AND SOILS Would the project:	Potentially Significant Impact	Less Than Significant With Mitigation Incorporated	Less Than Significant Impact	No Impact
(a) Directly or indirectly cause potential substantial adverse effects, including the risk of loss, injury, or death involving:				
i) Rupture of a known earthquake fault, as delineated on the most recent Alquist-Priolo Earthquake Fault Zoning Map issued by the State Geologist for the area or based on other substantial evidence of a known fault? Refer to Division of Mines and Geology Special Publication 42.	☐	☐	☐	☒
ii) Strong seismic ground shaking?	☐	☐	☒	☐
iii) Seismic-related ground failure, including liquefaction?	☐	☒	☐	☐
iv) Landslides?	☐	☐	☐	☒
(b) Result in substantial soil erosion or the loss of topsoil?	☐	☒	☐	☐
(c) Be located on geologic units or soil that is unstable, or that would become unstable as a result of the project, and potentially result in on- or off-site landslide, lateral spreading, subsidence, liquefaction, or collapse?	☐	☒	☐	☐
(d) Be located on expansive soil, as defined in Table 18 1 B of the Uniform Building Code (1994), creating substantial direct or indirect risks to life or property?*	☐	☒	☐	☐
(e) Have soils incapable of adequately supporting the use of septic tanks or alternative wastewater disposal systems where sewers are not available for the disposal of wastewater?	☐	☐	☐	☒
(f) Directly or indirectly destroy a unique paleontological resource or site or unique geologic feature?	☐	☒	☐	☐

*Geology and Soils question (d) reflects the current 2016 California Building Code (CBC), which is based on the International Building Code (2015), effective January 1, 2017. The CBC is updated every three years.
Significance criteria established by CEQA Guidelines, Appendix G.

5.7.1. Setting

This section describes geology, soils, and seismic conditions, and analyzes environmental impacts related to geologic and seismic hazards that could result from the implementation of the proposed Project. The following discussion addresses existing environmental conditions in the affected area, identifies and analyzes environmental impacts, and recommends measures to reduce or avoid any adverse impacts anticipated from Project construction and operation. In addition, existing laws and regulations relevant to geologic and seismic hazards are described. In some cases, compliance with these existing laws and regulations would serve to reduce or avoid certain impacts that might otherwise occur with the implementation of the Project.

Baseline geologic, seismic, and soils information were collected for the Project route and surrounding area from published and unpublished literature, GIS data, and online sources. Data sources included geologic literature from the U.S. Geological Survey and California Geological Survey, and other readily available online reference materials. The study area for geology and soils is defined as the Project route and the areas immediately adjacent to the proposed Project for most geologic and soils topics with the exception that the study area related to seismically induced ground shaking includes significant regional active and potentially active faults within 50 miles of the proposed Project.

5.7.1.1. Regional Geologic Setting

The Project site is in the Santa Clara Valley, a relatively flat, elongate alluvial basin, in the Coast Ranges geomorphic province of California. The Santa Clara Valley is part of large structural depression that extends from south of Hollister to north of Santa Rosa and includes the San Pablo and San Francisco Bays (Norris & Webb, 1976). The Santa Clara Valley is bordered on the west and southwest by the Santa Cruz Mountains and on the east by the Diablo Mountain Range. The San Francisco Bay borders the Santa Clara Valley to the north, west, and east along its shorelines. The average slope of the valley floor ranges from nearly flat to about 2 percent grade, with the surrounding hillsides having steeper grades (City of Santa Clara, 2011).

The Coast Ranges geomorphic province is characterized by ridges and valleys and by strongly deformed sedimentary and metamorphic rocks of the Franciscan Complex and sediments deposited by a series of merging alluvial fans formed by streams draining from the adjacent mountains during recent geologic times. The area's groundwater aquifers occur in the alluvial sediments. The alluvial deposits in the Santa Clara Valley are derived from the Diablo Range and Santa Cruz Mountains. In the north-central area of the Santa Clara Valley, the alluvial deposits are interbedded with bay and lacustrine deposits. Soil types in the area include clay (low-lying central areas), loam and gravelly loam (northern area of the Santa Clara Valley), and eroded rock clay loam (foothills) (City of Santa Clara, 2011).

5.7.1.2. Local Geology

Most of the City is located on a gently sloping area of the valley floor in the north-central portion of the Santa Clara Valley. The City is primarily situated on alluvial fan deposits consisting of gravel, sand and finer sediments. Natural levee deposits consisting of silt and clay are located along the City's major streams. Man-made engineered levees for flood control have been constructed over many but not all of the natural levee deposits (City of Santa Clara, 2011). The Project area is mapped as being underlain by alluvial surficial sediments consisting of Holocene alluvial clay soil which includes bay mud deposits (Dibblee and Minch, 2005) and Holocene fine grained alluvial fan deposits generally containing large percentages of clay and fat clay (CGS, 2001). Based on Pleistocene alluvium contour mapping Pleistocene alluvium is located between approximately 30 to 35 feet below ground surface (Helley, 1990).

Artificial Fill. Although not mapped along the Project alignment or immediate vicinity (Dibblee and Minch, 2005), artificial fill, often referred to as undocumented or man-made fill, has been placed throughout the City in developed areas and likely underlies portions of the Project alignment. Generally, artificial fill consists of varying amounts of sand, clay, and gravel, and may have local areas of man-made debris such as lumber, concrete and brick fragments, and industrial slag materials in areas of undocumented or very old fill. Consistency of the clays range from soft to very stiff, and density of the sands range from very loose to medium dense. The artificial fills in the City include materials that were placed to fill in naturally low areas, to create building pads and roadways, and to construct landfills. In some cases, older, non-engineered fills have been placed in the City of Santa Clara without standards for fill materials or compaction. Building on non-engineered fills can result in the excessive settlement of structures, pavements, and utilities. However, artificial fills placed using current engineering practices would avoid impacts from excessive or differential settlement (City of Santa Clara, 2011).

5.7.1.3. Soils

Soils within the Project area reflect the underlying rock type, the extent of weathering of the rock, the degree of slope, and the degree of human modification. The Project route is underlain by four soil associations, identified from south to north as the Urban Land, Urban Land-Hangerone complex, Urban Land–Clear Lake complex, and the Urban Land–Campbell complex (NRCS, 2024). These soils are all identified as occurring on basin floors with slopes of 0 to 2 percent. Urban Land is a miscellaneous area,

identified by the NRCS as having little to no soil material and supports little to no vegetation; Urban Land soil parent material consists of disturbed and human transported material. The Hangerone component of the Urban Land-Hangerone complex is poorly drained and consists primarily of clay, with some clay and gravelly loam, the Clear Lake component of the Urban Land-Clear Lake complex is poorly drained and consists of silty clay, and the Campbell component of the Urban Land – Campbell complex is moderately well drained and consists of silt loam, silty clay loam, and silty clay (NRCS, 2024). The parent material for the Hangerone, Clear Lake, and Campbell components of the above complexes is alluvium derived from metamorphic and sedimentary rock and/or alluvium derived from metavolcanics (NRCS, 2024).

Expansive soils are characterized by their ability to undergo significant volume change (shrink and swell) due to changes in soil moisture content. Change in soil moisture can result from rainfall, landscape irrigation, utility leakage, roof drainage, and/or perched groundwater. Expansive soils are typically very fine grained with a high to very high percentage of clay. Such soil conditions can affect the structural integrity of buildings and other structures. Soils with moderate to high shrink-swell potential would be classified as expansive soils. Expansion potential of the Urban Land soils underlying the proposed Project route is undetermined, however the Hangerone, Clear Lake, and Campbell components of the soil complexes underlying the Project all have very high linear extensibility (shrink-swell potential) (NRCS, 2024).

Weak (loose or poorly consolidated) soils can compress, collapse, or spread laterally under the weight of buildings and fill, causing settlement. Usually, the thickness of weak soil will vary and differential settlement will occur. Weak soils also tend to amplify shaking during an earthquake, and can be susceptible to liquefaction, as discussed below (City of Santa Clara, 2011). According to hazard mapping compiled by the County of Santa Clara (2012), only soils near the Bay at the city's northernmost edge are identified as compressible.

Potential soil erosion hazards vary depending on the use, conditions, and textures of the soils. The properties of soil that influence erosion by rainfall and runoff are those that affect the infiltration capacity of a soil and those that affect the resistance of a soil to detachment and being carried away by flowing water. Soils containing high percentages of fine sands and silt and that are low in density, are generally the most erodible. Additionally, soils on steeper slopes would be more susceptible to erosion due to the effects of increased surface flow (runoff) on slopes where there is little time for water to infiltrate before runoff occurs. With increasing clay and organic matter content of soils, the potential for erosion decreases. Clays act as a binder to soil particles, reducing the potential for erosion. Soil erosion hazards are not identified for the Urban Land soils, however the Hangerone and Clear Lake components of two of the soil complexes have moderate potential for both wind and water erosion and the Campbell component of the third soil complex underlying the Project has moderate to low potential for wind erosion and moderate to high potential for erosion by water (NRCS, 2024).

5.7.1.4. Subsidence

Land subsidence can occur in valleys containing aquifer systems that are, in part, made up of fine-grained sediments and that have undergone extensive groundwater development. Land subsidence is generally characterized by a broad zone of deformation where differential settlements are small. The main cause of subsidence in California is groundwater pumping. As groundwater is withdrawn, the pore-fluid pressure in the sediments decreases, allowing the weight of the overlying sediment to permanently compact or compress the fine-grained units. This effect is most pronounced in younger, unconsolidated sediments. The effects of subsidence include damage to buildings and infrastructure, increased flood risk in low-lying areas, and lasting damage to groundwater aquifers and aquatic ecosystems.

Between about 1915 and 1969, the northern portion of Santa Clara County experienced as much as 13 feet of subsidence due to excessive pumping of groundwater. Over 100 square miles were affected. from San Jose to southern San Francisco Bay (SCCVWD, 2024). The Santa Clara Valley Water District's aquifer

recharge efforts started in the mid-1930s. Creating ponds and reservoirs, importing water, and implementing a pumping tax in 1964 proved successful in allowing groundwater levels to recover (USGS, 2024a). By about 1970, subsidence was essentially halted because of investments in reservoirs, diversification of water supplies, and groundwater recharge, along with management programs that allowed groundwater conditions to recover (SCCWD, 2024).

5.7.1.5. Slope Stability

Important factors that affect the slope stability of an area include the steepness of the slope, the relative strength of the underlying rock material, and the thickness and cohesion of the overlying colluvium and alluvium. The steeper the slope and/or the less strong the rock, the more likely the area will be susceptible to landslides. The steeper the slope and the thicker the colluvium, the more likely the area is susceptible to debris flows. Another indication of unstable slopes is the presence of old or recent landslides or debris flows.

The proposed Project is on the gently sloping and nearly flat valley floor, is along flat graded parcels and would not be subject to landslides. According to landslide hazard mapping compiled by the County of Santa Clara (2012), the City of Santa Clara and the proposed Project area are not within any landslide hazard zones and the California Geological Survey (CGS) does not map and any landslide hazard zones within the city nor at or near the proposed Project (CGS, 2024a).

5.7.1.6. Seismicity

Under the Alquist-Priolo Act, seismic faults are classified as a Holocene active, a Pre-Holocene, Age-undetermined, or inactive, based on the following criteria (CGS, 2018):

- **Holocene-active faults:** Faults that have moved during the past 11,700 years. This age boundary is an absolute age (number of years before present) and is not a radiocarbon (14C) age determination, which requires calibration in order to derive an absolute age.
- **Pre-Holocene faults:** Faults that have not moved in the past 11,700 years, thus do not meet the criteria of "Holocene-active fault" as defined in the A-P Act and SMGB regulations. This class of fault may be still capable of surface rupture but is not regulated under the A-P Act. Depending on available site-specific and regional data such as proximity to other active faults, average recurrence, variability in recurrence, the timing of the most recent surface rupturing earthquake, and case studies from other surface rupturing earthquakes, the Project geologist may, but is not required to, recommend setbacks. Engineered solutions can also be considered by a licensed engineer operating within his or her field of practice.
- **Age-undetermined faults:** Faults where the recency of fault movement has not been determined. Faults can be "age-undetermined" if the fault in question has simply not been studied in order to determine its recency of movement. Faults can also be age-undetermined due to limitations in the ability to constrain the timing of the recency of faulting. Examples of such faults are instances where datable materials are not present in the geologic record, or where evidence of recency of movement does not exist due to stripping (either by natural or anthropogenic processes) of Holocene-age deposits. Within the framework of the A-P Act, age-undetermined faults within regulatory Earthquake Fault Zones are considered Holocene-active until proved otherwise.
- **Inactive:** A fault may only be presumed to be inactive based on satisfactory geologic evidence; however, the evidence necessary to prove inactivity sometimes is difficult to obtain and locally may not exist.

Although it is difficult to quantify the probability that an earthquake will occur on a specific fault, this classification assumes that if a fault has moved during the Holocene epoch, it is likely to produce earthquakes in the future and is considered an active fault.

The Project area will be subject to regional ground shaking associated with earthquakes on faults of the San Andreas fault system. Active faults of the San Andreas system are predominantly strike-slip faults accommodating translational movement between the Pacific and North American tectonic plates.

Active and potentially active faults within 50 miles of the approximate center of the proposed Project that are significant potential seismic sources relative to the proposed Project are presented in Table 5.7-1.

Table 5.7-1. Significant Active and Potentially Active Faults within 50 miles of the Proposed Project

Fault Name	Distance[1] (miles)	Estimated Maximum Magnitude[2,3]	Fault Type[1]
Hayward–Rodgers Creek	5.3[2]	6.8–7.3	Right Lateral Strike Slip, 90◦ dip
Monte Vista–Shannon	6.9[2]	6.5	Thrust Fault, dips 45°W
Calaveras	8.8[2]	6.4–7.0	Right Lateral Strike Slip, 90◦ dip
San Andreas	11.1[2]	7.1-7.9	Right Lateral Strike Slip, 90◦ dip
Zayante-Vergeles	20.7	7.0	Right Lateral Strike Slip, 90◦ dip
Greenville Connected	23.9	7.0	Right Lateral Strike Slip, 90◦ dip
San Gregorio Connected	24.9	7.5	Right Lateral Strike Slip, 90◦ dip
Mount Diablo Thrust	24.6	6.7	Blind Thrust, dips 38° NE
Great Valley 7	33.5	6.9	Blind Thrust, dips 15° W
Monterey Bay–Tularcitos	33.6	7.3	Right Lateral Strike Slip, 90◦ dip
Green Valley Connected	35.3	6.8	Right Lateral Strike Slip, 90◦ dip
Ortigalita	38.0	7.1	Right Lateral Strike Slip, 90◦ dip
Great Valley 5, Pittsburg Kirby Hills	43.7	6.7	Blind Thrust (reverse), dips 90°
Great Valley 8	43.9	6.8	Blind Thrust, dips 15° W
Quien Sabe	45.6	6.6	Right Lateral Strike Slip, 90◦ dip

1 Fault distances and type obtained from the 2008 National Seismic Hazard Maps – Source Parameters website (USGS, 2024b). Fault distances measured to generalized to the National Seismic Hazard Map (NSHM) fault trace.
2 Fault distance modified using USGS and CGS Quaternary Faults data (USGS and CGS, 2024).
3 Maximum Earthquake Magnitude – the maximum earthquake that appears capable of occurring under the presently known tectonic framework; magnitude listed is "Ellsworth-B" magnitude from USGS 2008 National Seismic Hazard Maps - Source Parameters unless otherwise noted.
4 Range of Magnitude represents varying potential rupture scenarios with single or multiple segments rupturing in various combinations.

Fault Rupture

Fault rupture is the surface displacement that occurs when movement on a fault deep within the earth breaks through to the surface. Fault rupture and displacement almost always follows preexisting faults, which are zones of weakness; however, not all earthquakes result in surface rupture (i.e., earthquakes that occur on blind thrusts do not result in surface fault rupture). Rupture may occur suddenly during an earthquake or slowly in the form of fault creep. In addition to damage caused by ground shaking from an earthquake, fault rupture is damaging to buildings and other structures due to the differential displacement and deformation of the ground surface that occurs from the fault offset, leading to damage or collapse of structures across this zone.

While the closest fault to the Project site is the active Hayward fault (part of the Hayward-Rodgers Creek fault zone), no known active or potentially active faults are mapped crossing or immediately adjacent to the Project site (CGS, 2024a). Additionally, the City of Santa Clara is not crossed by any faults zoned under the Alquist-Priolo Earthquake Fault Zoning Act (CGS, 2024a; City of Santa Clara, 2011). There is no risk of surface fault rupture at the Project site.

Ground Shaking

An earthquake is classified by the amount of energy released, which traditionally has been quantified using the Richter scale. Recently, seismologists have begun using a Moment Magnitude (M) scale because it provides a more accurate measurement of the size of major and great earthquakes. For earthquakes of less than M 7.0, the Moment and Richter Magnitude scales are nearly identical. For earthquake magnitudes greater than M 7.0, readings on the Moment Magnitude scale are slightly greater than a corresponding Richter Magnitude. Numerous moderate and large earthquakes have occurred within 50 miles of the Project site, including 44 earthquakes of M 5.5 or greater, which includes 16 earthquakes of M 6.0 to M 6.9, and one earthquake of greater than M 7.0 (USGS, 2024c). Catastrophically damaging earthquakes in the Project area include:

- M6.9 1989 Loma Prieta Earthquake – resulted in 63 dead, 3,737 injured, and $6 billion in property damage in the region;
- M7.9 1906 San Francisco Earthquake – resulted in 3,000 dead and $524 million in property damage (includes damage from fire); and the
- M6.8 1868 Hayward Fault Earthquake – 30 dead and $350,000 in property damage (USGS, 2024c; CGS, 2024b).

The City is located in a region characterized by a moderate to high ground shaking hazard. (City of Santa Clara, 2011). Periodic earthquakes accompanied by surface displacement can be expected to continue in the region.

The intensity of the seismic shaking, or strong ground motion, along the proposed Project route during an earthquake depends on the distance between the Project area and the epicenter of the earthquake, the magnitude of the earthquake, and the geologic conditions underlying and surrounding the Project. Earthquakes occurring on faults closest to the Project area would most likely generate the largest ground motion. Earthquake damage resulting from ground shaking is determined by several factors: the magnitude of an earthquake, depth of focus, distance from the fault, intensity and duration of shaking, local groundwater and soil conditions, presence of hillsides, structural design, and the quality of workmanship and materials used in construction. Earthquake shaking hazards are commonly calculated by projecting earthquake rates based on earthquake history and fault slip rates, the same data used for calculating earthquake probabilities. The Probabilistic Seismic Hazard Map (PSHM) for California was used to estimate ground shaking hazards along the proposed Project (CGS, 2016). The PSHM for California shows the relative intensity of ground shaking from intermediate-period (1.0 second) earthquake shaking related to anticipated future earthquakes. Intermediate-period (1.0 second) shaking affects tall, relatively flexible buildings, but also correlates well with overall earthquake damage. The shaking potential is calculated as the level of ground motion that has a 2% chance of being exceeded in 50 years, which is the same as the level of ground-shaking with a 2475-year average repeat time. The estimated intermediate-period (1.0 second) ground accelerations for the entire route is 1.15 g, which represents a potential for strong ground shaking (CGS, 2016).

Liquefaction

Liquefaction is the phenomenon in which saturated granular sediments temporarily lose their shear strength during periods of earthquake-induced strong ground shaking. The susceptibility of a site to liquefaction is a function of the depth, density, and water content of the granular sediments and the magnitude and frequency of earthquakes in the region. Saturated, unconsolidated silts, sands, and silty sands within 50 feet of the ground surface are most susceptible to liquefaction. Liquefaction-related phenomena include lateral spreading, ground oscillation, flow failures, loss of bearing strength, subsidence, and buoyancy effects (Youd and Perkins, 1978). In addition, densification of the soil resulting in vertical settlement

of the ground can occur. To determine liquefaction susceptibility of a region, three major factors are considered: the density and textural characteristics of the alluvial sediments; the intensity and duration of ground shaking; and the depth to groundwater.

The City of Santa Clara is almost entirely within a zone of liquefaction hazard, including the proposed Project area (County of Santa Clara, 2012). Ground failure caused by liquefaction is thus a substantial concern for much of the City's development. The Project site is within a mapped CGS liquefaction hazard zone (CGS, 2024a). Additionally, the Project area is underlain by potentially liquefiable young alluvial sediments with shallow (less than 10 feet below ground surface) to artesian water levels (water levels that flow to the surface) (CGS, 2001; DWR, 2024).

5.7.1.7. Paleontology

Paleontological resources are the fossilized remains of organisms from prehistoric environments found in geologic strata. These are valued for the information they yield about the history of the earth and its past ecological settings. According to the City of Santa Clara General Plan EIR, the City is situated on alluvial fan deposits of the Holocene age, consisting of gravel, sand and finer sediments. Along the City's major streams are natural levee deposits consisting of silt and clay, also of the Holocene age. Geologic units of Holocene age are generally not considered sensitive for paleontological resources, because biological remains younger than 10,000 years are not usually considered fossils. Holocene materials in the Santa Clara Valley may have some level of sensitivity for paleontological resources (City of Santa Clara, 2011).

In the Santa Clara Valley, where these Holocene age sediments overlie older, Pleistocene age sediments that have a high potential to contain paleontological resources. The Pleistocene age sediments, often found at depths of 10 feet (3 meters) or more below the ground surface in the region, have yielded the fossil remains of plants and extinct terrestrial Pleistocene vertebrates (City of Santa Clara, 2011). Pleistocene alluvial sediments may be found at depths of 30 to 35 feet below Holocene alluvium in the Project area (Helley, 1990).

The Project route is underlain by artificial fill over young channel deposited alluvial sediments which have no and low paleontological sensitivity, respectively; the young alluvial sediments are unlikely to have significant fossils due to their age and their high energy method of deposition. The greatest anticipated depth of any excavation along the proposed Project would be approximately 20 to 35 feet (dependent upon pole height) for the 115 kV transmission line tubular steel poles and pole foundations with a typical auger diameter of 8 feet. All other excavations would be at shallower depths.

5.7.1.8. Regulatory Background

Federal

The Clean Water Act. The Clean Water Act establishes the basic structure for regulating discharges of pollutants into the Waters of the U.S. The Act authorized the Public Health Service to prepare comprehensive programs for eliminating or reducing the pollution of interstate waters and tributaries and improving the sanitary condition of surface and underground waters with the goal of improvements to and conservation of waters for public water supplies, propagation of fish and aquatic life, recreational purposes, and agricultural and industrial uses. The proposed Project construction may disturb a surface area greater than one acre; therefore, SVP would be required to obtain a National Pollution Discharge Elimination System (NPDES) General Permit for Storm Water Discharges Associated with Construction Activity under Clean Water Act regulations. Compliance with the NPDES would require that the applicant prepare and submit a Storm Water Pollution Prevention Plan (SWPPP).

The International Building Code (IBC). The International Building Code (IBC) is published by the International Code Council (ICC). The scope of this code covers major aspects of the design and construction

and structures and buildings, except for three-story one- and two-family dwellings and town homes. The International Building Code has replaced the Uniform Building Code as the basis for the California Building Code and contains provisions for structural engineering design. The 2018 IBC addresses the design and installation of structures and building systems through requirements that emphasize performance. The IBC includes codes governing structural as well as fire- and life-safety provisions covering seismic, wind, accessibility, egress, occupancy, and roofs.

State

The California Building Code, Title 24, Part 2 (CBC, 2023). The California Building Code, Title 24, Part 2 provides building codes and standards for design and construction of structures in California. The 2023 CBC is based on the 2021 International Building Code with the addition of more extensive structural seismic provisions. Chapter 16 of the CBC contains definitions of seismic sources and the procedure used to calculate seismic forces on structures.

The Alquist-Priolo Earthquake Fault Zoning Act of 1972, Public Resources Code (PRC), sections 2621–2630 (formerly the Special Studies Zoning Act). The Alquist-Priolo Earthquake Fault Zoning Act regulates development and construction of buildings intended for human occupancy to avoid the hazard of surface fault rupture. While this Act does not specifically regulate transmission and telecommunication lines; it does help define areas where fault rupture is most likely to occur. This Act groups faults into categories of active, potentially active, and inactive faults. Historic and Holocene age faults are considered active, Late Quaternary and Quaternary age faults are considered potentially active, and pre-Quaternary age faults are considered inactive. These classifications are qualified by the conditions that a fault must be shown to be “sufficiently active” and “well defined” by detailed site-specific geologic explorations in order to determine whether building setbacks should be established.

The Seismic Hazards Mapping Act (the Act) of 1990 (Public Resources Code, Chapter 7.8, Division 2, sections 2690–2699). The Act directs the California Department of Conservation, Division of Mines and Geology [now called California Geological Survey (CGS)] to delineate Seismic Hazard Zones. The purpose of the Act is to reduce the threat to public health and safety and to minimize the loss of life and property by identifying and mitigating seismic hazards. Cities, counties, and State agencies are directed to use seismic hazard zone maps developed by CGS in their land-use planning and permitting processes. The Act requires that site-specific geotechnical investigations be performed prior to permitting most urban development projects within seismic hazard zones.

Public Resources Code Section 5097.5. PRC Section 5097.5 provides for the protection of cultural resources. This PRC section prohibits the removal, destruction, injury, or defacement of archaeological features on any lands under the jurisdiction of State or local authorities.

PRC Section 5097.5 also affirms that no person shall willingly or knowingly excavate, remove, or otherwise destroy a vertebrate paleontological site or paleontological feature without the express permission of the overseeing public land agency. It further states under PRC Section 30244 that any development that would adversely impact paleontological resources shall require reasonable mitigation. These regulations apply to projects located on land owned by or under the jurisdiction of the State or any city, county, district, or other public agency (PRC §5097.5). The importance of paleontological resources is based on their scientific and educational value. The Society of Vertebrate Paleontology identifies vertebrate fossils, their taphonomy (fossilization process) and associated environmental data, and fossiliferous deposits as scientifically significant nonrenewable paleontological resources (Society of Vertebrate Paleontology, 2010). Botanical and invertebrate fossils and assemblages may also be significant. Absent specific agency guidelines, most professional paleontologists in California adhere to guidelines set forth in “Standard Procedures for the Assessment and Mitigation of Adverse Impacts to Paleontological Resources” (Society of Vertebrate Paleontology, 2010). These categories include high, undetermined, low, and no potential.

Local

City of Santa Clara General Plan. The purpose of the City's safety policies is to identify potential hazards and measures that can lessen risks for the City's population and property (City of Santa Clara, 2014). Policies in the General Plan related to geologic hazards and paleontologic resources that apply to the proposed Project are listed below.

- **Policy 5.10.5-P7.** Implement all recommendations and design solutions identified in project soils reports to reduce potential adverse effects associated with unstable soils or seismic hazards.
- **Policy 5.6.3-P2.** Encourage salvage and preservation of scientifically valuable paleontological or archaeological materials.
- **Policy 5.6.3-P4.** Require that a qualified paleontologist/archaeologist monitor all grading and/or excavation if there is a potential to affect archeological or paleontological resources, including sites within 500 feet of natural water courses and in the Old Quad neighborhood.
- **Policy 5.6.3-P5.** In the event that archaeological/paleontological resources are discovered, require that work be suspended until the significance of the find and recommended actions are determined by a qualified archaeologist/paleontologist.

5.7.2. Environmental Impacts and Mitigation Measures

(a) Would the project directly or indirectly cause potential substantial adverse effects, including the risk of loss, injury, or death involving:

i. Rupture of a known earthquake fault, as delineated on the most recent Alquist-Priolo Earthquake Fault Zoning Map issued by the State Geologist for the area or based on other substantial evidence of a known fault? Refer to Division of Mines and Geology Special Publication 42.

NO IMPACT. No Alquist-Priolo mapped or other known faults cross the proposed Project or are immediately adjacent to it. Therefore, there is no potential for the Project to be damaged by fault rupture and no project activities would result in triggering or directly or indirectly causing primary fault rupture.

ii. Strong seismic ground shaking?

LESS THAN SIGNIFICANT. The proposed Project would be in an area mapped as likely to experience strong ground shaking in the event of a large earthquake. The area has historically experienced moderate to severe ground shaking due to the numerous earthquakes that have occurred in the San Francisco Bay Area. These earthquakes have resulted in deaths and injuries and severe damage to property and structures.

Except during construction there would be no full-time onsite workers. The would be no occupied structures as part of the Project. During operations, workers will be onsite periodically for as needed inspections and maintenance. The proposed Project may be subject to strong ground shaking during the Project's lifetime. While the potential for seismically induced ground shaking in the proposed Project area during Project operation is unavoidable, the transmission line structures would be designed to meet or exceed all applicable local and State seismic design criteria. Design of these structures to all appropriate seismic design criteria reduces the potential for loss, injury, or death of workers or the public to less than significant.

iii. Seismic-related ground failure, including liquefaction?

LESS THAN SIGNIFICANT WITH MITIGATION INCORPORATED. The proposed Project is within a CGS liquefaction hazard zone and is underlain by potentially liquefiable alluvial sediments and very shallow groundwater. Therefore, the potential for liquefaction-related damage to the transmission line structures is high. The transmission line structures would be designed to appropriate local and State guidelines. However, to ensure that direct and indirect impacts associated with seismically induced ground failures or liquefaction would be less than significant, mitigation measure MM G-1 (Conduct Geotechnical Investigations for

Liquefaction) shall be implemented prior to final Project design to ensure that people or structures are not exposed to hazards from the Project associated with earthquake-induced liquefaction.

Mitigation Measure for Seismically Induced Liquefaction

MM G-1 **Conduct Geotechnical Investigations.** Because seismically induced liquefaction-related ground failure has the potential to damage or destroy Project components, SVP shall cause design-level geotechnical investigation for the Project to be performed that shall include investigations designed to assess the potential for geologic and seismic hazards, and specifically include evaluation of the potential for liquefaction and expansive soils to affect the 115 kV line structures. Where liquefaction or expansive soils hazards are found to exist/verified, appropriate engineering design and construction measures shall be incorporated into the Project design as deemed appropriate by the Project engineer. Finalized Project design incorporating geotechnical recommendations shall be submitted to the City 60 days prior to Project construction.

iv. Landslides?

NO IMPACT. The proposed Project would be located on a flat to relatively flat graded area on the gently sloping Santa Clara Valley floor and no known landslides have occurred in the Project vicinity. The Project route is not located within or near any CGS designated landslide hazard area (CGS, 2024a). Therefore, landslides and other slope failures are highly unlikely to occur and there would be no impact related to landslides or slope instability.

(b) Would the project result in substantial soil erosion or the loss of topsoil?

LESS THAN SIGNIFICANT WITH MITIGATION INCORPORATED. The Project route is in a flat to nearly flat urban area and grading would not be required for the proposed project. Excavation for tubular steel poles and foundations would occur as part of Project construction. Excavation/trenching for duct banks and vaults would occur under Option 2, to construct the underground segment. Surface disturbing activities such as excavation and trenching will be required for construction of the proposed Project but would be done in compliance with regulations pertaining to sediment and runoff control. Best management practices for sediment control would be implemented to manage temporary soil stockpiles. In addition, as noted in Section 5.10 Hydrology and Water Quality, a stormwater pollution prevention plan (SWPPP) or erosion control plan would be required under mitigation measure MM HYD-1 to address surface water quality. Implementation of this measure would ensure that the potential erosion or loss of topsoil is limited and reduced to a less than significant impact.

Mitigation Measure for Soil Erosion or Loss of Topsoil

MM HYD-1 **SWPPP or Erosion Control Plan Development and Implementation.** (See full text in Section 5.10, Hydrology and Water Quality.)

(c) Would the project be located on geologic units or soil that is unstable, or that would become unstable as a result of the project, and potentially result in on- or off-site landslide, lateral spreading, subsidence, liquefaction, or collapse?

LESS THAN SIGNIFICANT WITH MITIGATION INCORPORATED. As discussed above in Item (a)(iii) regarding liquefaction, the proposed Project would be constructed in an area within a zone of liquefaction hazard; therefore, structures could potentially suffer liquefaction-related damage. However, compliance with applicable local and State design regulations and implementation of mitigation measure MM G-1 (Conduct Geotechnical Investigations) prior to final Project design would ensure that people or structures are not exposed to hazards associated with earthquake-induced liquefaction, reducing the impact to less than significant.

Additionally, as discussed above in Item (a)(iv) regarding landslides, there would be no impact from landslides as the proposed Project is located on and traverses flat to gently sloping terrain and would not be subject to landslides. Although the Project site is in an area with known historic subsidence, subsidence in the Santa Clara Valley has been controlled/stopped due to activities and procedures put in place by the Santa Clara Valley Water District. The Project will not construct any new groundwater extraction wells and would not contribute to declining water levels and subsidence. Thus, there would be no impact from subsidence.

Mitigation Measure for Seismically Induced Liquefaction

MM G-1 Conduct Geotechnical Investigations. (See full text above.)

(d) Would the project be located on expansive soil, as defined in Table 18-1-B of the Uniform Building Code (1994), creating substantial direct or indirect risks to life or property?

LESS THAN SIGNIFICANT WITH MITIGATION INCORPORATED. Mapping by the NRCS indicates that the proposed Project is underlain by soil mapped as Urban Land, Urban Land-Hangerone complex, Urban Land–Clear Lake complex, and the Urban Land–Campbell complexes. Urban Land soils unit have undetermined expansive potential, however the Hagerone, Clear Lake, and Campbell components of the soil complexes underlying the proposed Project have very high expansive potential (NRCS, 2024). Expansive soils could impact the integrity and stability of above and underground structures, including tubular steel poles and pole foundations, and duct banks and vaults (Option 2), potentially resulting in damage to structures and potentially injuring workers or the public. Compliance with local and State design requirements would reduce potential impacts from expansive soils. However, to ensure that direct and indirect impacts associated with expansive soils would be less than significant, mitigation measure MM G-1 (Conduct Geotechnical Investigations) shall be implemented prior to final Project design to ensure that people or structures are not exposed to hazards from the Project associated with expansive soils.

Mitigation Measure for Expansive Soils

MM G-1 Conduct Geotechnical Investigations. (See full text above.)

(e) Would the project have soils incapable of adequately supporting the use of septic tanks or alternative wastewater disposal systems where sewers are not available for the disposal of wastewater?

NO IMPACT. The proposed Project would not include any components requiring septic tanks or alternative wastewater systems. Therefore, there would be no impact.

(f) Would the project directly or indirectly destroy a unique paleontological resource or site or unique geologic feature?

LESS THAN SIGNIFICANT WITH MITIGATION INCORPORATED. The proposed Project is anticipated to disturb the ground surface for excavation and grading. Geologic units underlying the site consist of undetermined depths of artificial fill, Holocene alluvium, and Pleistocene alluvium. Depth to Pleistocene alluvium at the site is estimated at 30 to 35 feet below ground surface (Helley, 1990). The Project excavation for the tubular steel pole foundations may exceed these depths in some limited locations, therefore, there is a small chance that Project ground disturbance for the pole excavations could potentially encounter older Quaternary alluvium (Pleistocene alluvial sediments) near the bottom of the auger holes that may contain unique paleontological resources. The possibility that previously unknown paleontological resources could be discovered and damaged or destroyed during Project ground disturbance would potentially constitute a significant impact absent mitigation. Implementation of mitigation measure MM G-2 would evaluate and protect unanticipated discoveries of unique paleontological resources or unique geologic features, thereby reducing this potential impact to a less than significant level.

Mitigation Measure for Paleontological Resources

MM G-2 **Worker Training and Management of Paleontological Resources.** A paleontologist must be retained who meets the professional paleontologist qualifications (Society of Vertebrate Paleontology's Standard Procedures, 2010) and has demonstrated experience in carrying paleontological projects to completion. The qualified professional paleontologist shall prepare a Worker Environmental Awareness Program (WEAP) for potentially encountered paleontological resources, and training shall be provided for all staff who will be onsite during excavations. The WEAP shall show what local Pleistocene fossils look like in general, where they may appear in the Project, and how to proceed should material suspected to be a fossil is encountered.

The WEAP shall include procedures to follow if paleontological resources are encountered, including:

- A monitoring plan for soils generated from tubular pole foundation excavations that may encounter Pleistocene sediments. Workers may temporarily halt operations to allow for identification and collection of paleontological resources from soil spoil piles. If a potential significant paleontological resource is noted, a qualified paleontologist or paleontological monitor shall be called to the site identify and collect the fossil.
- A plan for treatment of significant fossils that provides for the treatment of specimens to the point of identification and permanent preservation, including washing of sediments to recover small invertebrates and vertebrates.
- A specimen identification, analysis, and curation plan that includes identification to the lowest taxonomic level possible; taxonomic, taphonomic, and biostratigraphic analysis; and curation to the standards of the repository where they will be curated.
- Paleontological resource collection treatment, and identification shall meet standards set forth in the Society of Vertebrate Paleontology (2010).

5.8. Greenhouse Gas Emissions

GREENHOUSE GAS EMISSIONS Would the project:	Potentially Significant Impact	Less Than Significant With Mitigation Incorporated	Less Than Significant Impact	No Impact
(a) Generate greenhouse gas emissions, either directly or indirectly, that may have a significant impact on the environment?	☐	☐	☒	☐
(b) Conflict with any applicable plan, policy or regulation of an agency adopted for the purpose of reducing the emissions of greenhouse gases?	☐	☐	☒	☐

Significance criteria established by CEQA Guidelines, Appendix G.

5.8.1. Setting

Effects of GHG Emissions. Global climate is altered by the effects of greenhouse gases (GHG) in the atmosphere, creating what is commonly known as the "greenhouse effect." These gasses trap some of the heat radiated from the Earth's surface, thereby warming the atmosphere. The greenhouse effect is driven mainly by water vapor, aerosols, carbon dioxide (CO_2), methane (CH_4), nitrous oxide (N_2O), and other constituents.

Globally, the presence of GHG affects temperatures, precipitation, sea levels, ocean currents, wind patterns, and storm activity and intensity. The standard definition of anthropogenic GHG emissions of concern includes six primary pollutants: CO_2, CH_4, N_2O, hydrofluorocarbons (HFCs), perfluorocarbons (PFCs), and sulfur hexafluoride (SF_6). The most important and widely occurring anthropogenic GHG is CO_2, primarily from the burning of fossil fuels as a source of energy.

Changing temperatures, precipitation, sea levels, ocean currents, wind patterns, and storm activity provide indicators and evidence of the effects of climate change. For 1950 onward, relatively comprehensive data sets of observations are available. Research by California's Office of Environmental Health Hazard Assessment (OEHHA) reports certain climate change indicators by categorizing the effects as: changes in California's climate; impacts to physical systems including oceans, lakes, rivers, and snowpack; and impacts to biological systems including humans, vegetation, and wildlife. The primary observed changes in California's climate include increased annual average air temperatures, more-frequent extremely hot days and nights, and increased severity of drought. Impacts to physical systems affected by warming temperatures and changing precipitation patterns show decreasing snowmelt runoff, shrinking glaciers, and rising sea levels. Impacts to terrestrial, marine, and freshwater biological systems, with resulting changes in habitat, agriculture, and food supply are occurring in conjunction with the potential to impact human well-being (OEHHA, 2018).

GHG Emissions Trends. California first formalized a strategy to achieve GHG reductions in 2008, when California produced approximately 484 million metric tons of CO_2 equivalent (MMTCO2e) according to the official Air Resources Board inventory. Statewide emissions have been declining in recent years. California's sources of GHG emitted approximately 381 MMTCO2e in 2021 (CARB, 2023). Globally, annual average GHG emissions were 56,000 MMTCO2e per year for the decade 2010-2019 (IPCC, 2022). In this global context, California emits less than one percent of the global anthropogenic GHG.

Regulatory Background

California Global Warming Solutions Act of 2006 [Assembly Bill 32 (AB 32)]. The California Global Warming Solutions Act of 2006 (AB 32) required that California's greenhouse gas (GHG) emissions be reduced to 1990 levels by 2020. The reduction is being accomplished through an enforceable statewide cap on global warming emissions beginning in 2012. AB 32 directs the ARB to develop regulations and a mandatory reporting system to track and monitor global warming emissions levels (AB 32, Chapter 488, Statutes of

2006). AB 32 requires ARB to update the Scoping Plan at least every 5 years. Accordingly, the ARB released a 2022 Scoping Plan Update in November 2022 (CARB, 2022), which outlines a roadmap to achieve carbon neutrality by 2045.

In passing AB 32, the California Legislature found that:

> *Global warming poses a serious threat to the economic well-being, public health, natural resources, and the environment of California. The potential adverse impacts of global warming include the exacerbation of air quality problems, a reduction in the quality and supply of water to the state from the Sierra snowpack, a rise in sea levels resulting in the displacement of thousands of coastal businesses and residences, damage to marine eco-systems and the natural environment, and an increase in the incidences of infectious diseases, asthma, and other human health-related problem.*

Other major Executive Orders, legislation, and regulations adopted for the purpose of reducing GHG emissions support the implementation of AB 32 and California's climate goals, as described below.

California Governor's Executive Order B-30-15 and Senate Bill 32 (SB 32). Executive Order B-30-15 (April 2015) establishes a California greenhouse gas reduction target of 40 percent below 1990 levels by 2030. One purpose of this interim target is to ensure California meets its target of reducing greenhouse gas emissions to 80 percent below 1990 levels by 2050. This executive order also specifically addresses the need for climate adaptation and directs state agencies to update the California Climate Adaptation Strategy to identify how climate change will affect California infrastructure and industry and what actions the state can take to reduce the risks posed by climate change. Senate Bill 32 (SB 32) of 2016 codifies this GHG emissions target to 40 percent below the 1990 level by 2030.

Clean Energy and Pollution Reduction Act of 2015 [Senate Bill 350 (SB 350)]. California's state policy objectives on long-term energy planning were updated with SB 350 legislation that was signed into law on October 7, 2015. The requirements include demonstrating through integrated resource planning how each energy service provider, such as SVP, will continue to expand the use of renewable energy supplies in the mix of electricity delivered to end-use customers. With SB 350 California expanded the specific set of objectives to be achieved by 2030, including to increase the Renewable Portfolio Standard (RPS) from 33 percent to 50 percent for the procurement of California's electricity from renewable sources, and to double the energy efficiency savings in electricity and natural gas end uses by retail customers.

California Governor's Executive Order B-55-18 and Senate Bill 100 (SB 100). Executive Order B-55-18 establishes a statewide goal for California to achieve carbon neutrality by 2045. In September 2018, Senate Bill 100 (SB 100), revising and extending California's Renewables Portfolio Standard program, was signed into law. SB 100 accelerated the RPS targets and established the goals of 50 percent renewable energy resources by 2026 and 60 percent renewable energy resources by 2030. These RPS targets are codified according to compliance periods in Pub. Util. Code Section 399.30, as follows: 33 percent by December 31, 2020, 44 percent by December 31, 2024, 52 percent by December 31, 2027, and 60 percent by December 31, 2030. SB 100 also sets a target for California to achieve a GHG-free electricity supply for 100 percent of retail sales of electricity to California end-use customers by December 31, 2045. The 2022 Scoping Plan Update assesses progress towards achieving the updated 2030 targets, while laying out a path to achieve the SB 100 target of carbon neutrality no later than 2045 (CARB, 2022).

Mandatory Reporting of Greenhouse Gas Emissions (17 CCR 95100 to 95158). The ARB Regulation for the Mandatory Reporting of Greenhouse Gas Emissions, or mandatory reporting rule, applies to electric power distribution companies and to fossil fuel electricity generating facilities with a nameplate capacity equal or greater than 1 MW capacity. As an Electric Power Entity under this rule, SVP must report GHG emissions associated with providing electricity to end-use customers.

Cap-and-Trade Program (17 CCR 95801 to 96022). The California Cap on Greenhouse Gas Emissions and Market-Based Compliance Mechanisms Regulation (Cap-and-Trade Program) was initially approved by ARB in 2011. The Cap-and-Trade Program applies to covered entities that fall within certain source categories, including first deliverers of electricity (such as fossil fuel power plants) and electrical distribution utilities, such as SVP. The covered entities must hold compliance instruments sufficient to cover the actual GHG emissions, as evidenced through the mandatory reporting rule requirements. This means that SVP, as an electrical distribution utility, bears the GHG compliance obligation for electricity delivered to end-users that are not otherwise covered entities in the Cap-and-Trade Program.

Emission Reductions of SF_6 from Gas Insulated Equipment (17 CCR 95350 to 95359). To reduce GHG emissions from electricity transmission and distribution equipment, ARB adopted a regulation for reducing or phasing-out SF_6 emissions from electric power system gas insulated switchgear. Reporting and inventorying requirements under this regulation apply to equipment, such as circuit breakers and transformers, at existing substations owned and operated by SVP. The proposed Project would not involve any change in SVP's existing gas insulated equipment covered by this rule.

City of Santa Clara, Climate Action Plan (CAP). The Santa Clara Climate Action Plan updated and adopted on June 7, 2022, aligns the City's strategies with evolving state and local requirements for climate planning to achieve SB 32 targets for 2030 and carbon neutrality by 2045 (City of Santa Clara, 2022). By building on the prior Climate Action Plan adopted in 2013, the 2022 update accounts for the effects of ongoing state and local actions for reducing GHG identifies additional actions to further reduce GHG and evaluates actions enhance climate resiliency throughout the City. The City's 2022 CAP envisions a 40 percent reduction in emissions by 2030 (SB 32), with an interim target of an 80 percent reduction in emissions by 2035, as it moves toward a 2045 goal of net carbon neutrality (EO B-55-18) (City of Santa Clara, 2022).

5.8.2. Environmental Impacts and Mitigation Measures

(a) Would the project generate greenhouse gas emissions, either directly or indirectly, that may have a significant impact on the environment?

LESS THAN SIGNIFICANT. The proposed construction activities may include mobilizing construction equipment, crews, and materials, excavating holes for poles, trenching for underground vault and cable installation, installing concrete foundations and equipment, installing poles, and stringing conductors. These activities during construction would cause GHG emissions from combustion of fuels used by the construction vehicles and equipment. Diesel and gasoline-powered construction equipment would include trucks for materials and crews, and the following types of equipment: backhoes, loaders, excavators, drill rigs, pumps, welders, pavers, rollers and generators. Equipment and motor vehicles would directly emit CO_2, CH_4, and N_2O due to fuel use and combustion.

The resulting one-time quantity of GHG emitted during the 14-month period of construction would be around 641 MTCO2e (Appendix C) for the overhead option, based on use of the California Emissions Estimator Model (CalEEMod; v. 2022.1.1.22). These one-time project-level emissions would cease at the conclusion of construction when activities transition to routine O&M. The one-time project-level construction emissions would cease at the conclusion of construction and would be well below the threshold level of 10,000 MTCO2e per year for annually recurring emissions from stationary sources (BAAQMD, 2023). Upon completion of construction, operation of the Project would not result in a notable incremental increase in GHG emissions from the baseline O&M activities conducted by SVP. The impact associated with GHG emissions would be less than significant. Therefore, the impact associated with GHG emissions would be less than significant.

(b) Would the project conflict with any applicable plan, policy or regulation of an agency adopted for the purpose of reducing the emissions of greenhouse gases?

LESS THAN SIGNIFICANT. California's regulatory setting for GHG emissions ensures that most of the existing and foreseeable GHG sources in electric power sector are subject to one or more programs aimed at reducing GHG. The 2022 Scoping Plan Update (ARB, 2022) provides an outline of actions to reduce California's GHG emissions. The scoping plan requires ARB and other state agencies to adopt regulations and other initiatives to reduce GHGs.

The proposed Project would generate limited quantities of direct GHG emissions from the construction and O&M activities. The mix of sources power delivered to the end-use customers would not change as a result of the proposed Project. The proposed Project would improve the infrastructure used in delivery of SVP's energy supply and would not affect SVP's ability to supply renewable energy.

California's Cap-and-Trade regulation is the major climate program covering Project-related GHG emissions. Construction and O&M activities would cause GHG emissions due to fuels used by the vehicles and equipment. The end-users of motor vehicle fuels like gasoline and diesel may include construction contractors that are not otherwise designated as covered entities in the Cap-and-Trade program, and these do not directly bear the Cap-and-Trade compliance obligation. However, all fuel suppliers must cover the end-user's GHG emissions. Because the Project-related GHG emissions, including construction-phase emissions and the operational-phase mobile source emissions, would be caused by use of fuels that are "covered" by the fuel suppliers subject to Cap-and-Trade requirements, these emissions would not conflict California's progress towards achieving GHG reductions.

As it does now, SVP would comply with ARB SF_6 regulations to inventory, report, and minimize SF_6 leaks through the use of new technology. The proposed Project would not add or modify any gas-insulated equipment in SVP's existing inventory and would not change the use of SF_6 in equipment. The proposed Project would not conflict with any applicable GHG management plan, policy, or regulation. Therefore, this impact would be less than significant.

5.9. Hazards and Hazardous Materials

HAZARDS AND HAZARDOUS MATERIALS Would the project:	Potentially Significant Impact	Less Than Significant With Mitigation Incorporated	Less Than Significant Impact	No Impact
(a) Create a significant hazard to the public or the environment through the routine transport, use, or disposal of hazardous materials?	☐	☒	☐	☐
(b) Create a significant hazard to the public or the environment through reasonably foreseeable upset and accident conditions involving the release of hazardous materials into the environment?	☐	☒	☐	☐
(c) Emit hazardous emissions or handle hazardous or acutely hazardous materials, substances, or waste within one-quarter mile of an existing or proposed school?	☐	☐	☒	☐
(d) Be located on a site which is included on a list of hazardous materials sites compiled pursuant to Government Code §65962.5 and, as a result, would it create a significant hazard to the public or the environment?	☐	☒	☐	☐
(e) For a project located within an airport land use plan or, where such a plan has not been adopted, within two miles of a public airport or public use airport, would the project result in a safety hazard or excessive noise for people residing or working in the project area?	☐	☐	☒	☐
(f) Impair implementation of or physically interfere with an adopted emergency response plan or emergency evacuation plan?	☐	☒	☐	☐
(g) Expose people or structures, either directly or indirectly, to a significant risk of loss, injury or death involving wildland fires?	☐	☐	☒	☐

Significance criteria established by CEQA Guidelines, Appendix G.

5.9.1. Setting

This section addresses issues related to environmental hazards and hazardous materials. Environmental hazards include accidental spills of hazardous materials, the presence of existing subsurface contamination, the risk of wildfire, and aircraft safety. Hazardous materials include fuel, oil, and lubricants. If encountered, contaminated soil can pose a health and safety threat to workers or the public.

5.9.1.1. Existing and Past Land Uses

Existing and past land use activities are commonly used as indicators of sites or areas with the potential for hazardous material storage and use or potential environmental contamination to have occurred. For example, many current and historic industrial sites have contaminated soil or groundwater with hazardous substances. Other hazardous materials sources include leaking underground tanks in commercial and rural areas, contaminated surface runoff from polluted sites, and plumes of contaminated groundwater. The proposed Project area is in an urban area with a mix of residential, commercial, and industrial uses, with residential uses having increased significantly in density since the 1990s.

5.9.1.2. Hazardous Materials

Construction activities routinely involve use and storage of hazardous materials such as cleaning solvents, paints, adhesives, vehicle fuels, oil, hydraulic fluid, and other vehicle and equipment maintenance fluids. The use and storage of such materials must comply with federal, state, and local regulations. Use of hazardous materials during construction of the proposed Project would primarily consist of fluids and fuels for construction equipment and vehicles; limited quantities of cleaning solvents, paints, and adhesives may also be used. Fueling of construction equipment and vehicles would take place in designated areas. Hazardous The use, storage, transport, and disposal of hazardous materials used in construction and operation and

maintenance of the proposed Project would be carried out in accordance with federal, state, and county regulations. No extremely hazardous substances (i.e., those governed pursuant to Title 40, Part 335 of the Code of Federal Regulations) are anticipated to be produced, used, stored, transported, or disposed of as a result of the proposed Project's construction.

5.9.1.3. Environmental Contamination

The proposed Project route is in a fully developed urban environment and passes through areas developed as residential, business park, commercial, and light industrial properties. A review of the State Water Resources Control Board (SWRCB) GeoTracker (SWRCB, 2024) and California Department of Toxic Substance Control (DTSC) EnviroStor (DTSC, 2024a) databases revealed there are 37 GeoTracker and five EnviroStor listings for sites with current or past environmental contamination within 0.25-miles of the proposed Project route. Several listings represent more than one property address/physical site. Of the GeoTracker listings, 10 are Cleanup Program listings and 27 are leaking underground storage tank (LUST) listings (SWRCB, 2024). All 27 of the LUST sites are listed as completed case closed. The EnviroStor sites include two State Response/NPL listings and three Voluntary Agreement cleanup listings. A summary of the GeoTracker Cleanup Program listings and the EnviroStor listings is presented in Table 5.9-1.

Table 5.9-1. Known Environmentally Contaminated Sites within 0.25-mile of the proposed Project

Site Name	Address	Distance and Direction from Alignment	Database and Status	Summary
SWRCB GeoTracker Sites				
Shaheen Property	4767 Lafayette Street, Santa Clara	130 feet E	Cleanup Program, Completed – Case Closed	Petroleum contaminated soil removed from former gas station and petroleum groundwater contamination naturally attenuated – No Further Action Case Closed issued in 2014
Anderson Construction	390 Norman Ave, Santa Clara	675 feet W	Cleanup Program, Open – Verification Monitoring	Site overlies shallow volatile organic compound (VOC) contaminated ground-water plume from neighboring property – Soil Vapor Intrusion Mitigation System installed and ongoing monitoring for new office building
Andite, Inc.	1440 Norman Ave, Santa Clara	785 feet W	Cleanup Program, Open – Site Assessment	From 1964 to 1985, Anadite owned and operated a hard anodizing plant at the Site. Two groundwater plumes are present at the Site: VOCs and chlorinated aliphatic hydrocarbons (CAHs). Former source areas are located at the solvent dip tanks (northeast of the Site) and the former chemical storage areas (south of the Site). Bioaugmentation Pilot Testing conducted at site in 2004 b- 2005. Assessment, delineation of plume, and groundwater monitoring are ongoing.
Pacific Production Consulting	600 Laurelwood Road	1250 feet E	Cleanup Program, Completed - Case Closed	Soil and non-potable shallow groundwater contaminated by chlorinated solvents. Remedial activities included excavation and disposal of impacted soil and groundwater bio injection. Remnant

Site Name	Address	Distance and Direction from Alignment	Database and Status	Summary
				contamination below commercial/ industrial use levels remain. Groundwater plume appears to be naturally attenuating as of 2014. Site was closed in 2016 with a DEED Restriction on types of property use and no groundwater extraction
3060 Raymond Street Renovation	3060 Raymond Street, Santa Clara	670 feet NW of southern terminus	Cleanup Program, Open – Site Assessment	Historical industrial uses at and near site. Subsurface investigations revealed contaminants of concern in soil, soil vapor, and groundwater including VOCs, petroleum products and byproducts, pesticides, heavy metals. Site Management Plan prepared in 2023 and assessment monitoring ongoing.
Comstock Industrial Properties	795-805 Comstock St, Santa Clara	505 feet E	Cleanup Program, Completed-Case Closed	Contamination from previous industrial site uses. Low levels of petroleum hydrocarbons, polynuclear aromatic hydrocarbons (PAHs) were detected, pesticides and metals were encountered in some samples above regulatory levels in the soil. Low levels of pesticides were encountered in groundwater, and VOCs were detected in soil vapor. Residual contamination remains in on-site soil, groundwater, and/or soil vapor. Site closed with restrictions on use and with required Site Management Requirements.
715 Comstock Industrial Property	715 Comstock St, Santa Clara	950 feet E	Cleanup Program, Open – Site Assessment	Industrial site with elevated levels of naphthalene and petroleum products, heavy metals, and asbestos in soil and elevated levels of VOCs in soil vapor. No contaminants of concern were detected in groundwater. Site Management Plan conditionally approved and vapor monitoring ceased with approval
Sobronto Development Co. - Central Expressway	800 Central Expressway, Santa Clara	860 feet SE	Cleanup Program, Completed-Case Closed	Former concrete pipe manufacturing site. Low levels of waste oil and asbestos noted in soil at site and low levels of VOCs were detected in groundwater in 1987. No Further Action was granted to the site in 2005. In 2019 asked for additional information and history of the site. Site was listed as Case Closed-Completed in 2020.
Owens Corning	960 Central Expressway, Santa Clara	670 feet S	Cleanup Program, Open – Verification Monitoring	Leaks of petroleum USTs in the 1980s resulted in groundwater contamination at the site, VOC contamination was also attributed to upgradient sources. Petroleum contaminant clean-up order rescinded in 2001, but VOC monitoring continued. Low levels of VOC remain in

Site Name	Address	Distance and Direction from Alignment	Database and Status	Summary
				groundwater. Several Case Closure requests have been submitted. Elevated levels of VOCs encountered in soil vapor; investigation plan for VOCs in soil vapor approved in 2023.
DTSC EnviroStor Sites				
Gianera 2 – Habitat for Humanity	2261 – 2285 Gianera St, Santa Clara	120 feet S	Voluntary Cleanup – Certified	Low levels of pesticide below residential levels detected in soil. Elevated levels of lead were detected. Impacted soil was removed from residence yards in 2011 and was certified as no further remedial action required
Hogan Drive Property	Hogan Drive and Lafayette Street, Santa Clara	190 feet E	Voluntary Cleanup – No Further Action	Former dry cleaner site (part of the Shaheen Property residential subdivision). Soil, soil vapor, and groundwater testing detected PCE in shallow groundwater, soil, and soil vapor in 2007. Excavation of contaminated soil, bio-remediation of groundwater, and natural attenuation. Reduced levels of VOC were detected in soil vapor and groundwater in 2007. In 2008 DTSC requested a revised human Health Risk Assessment be prepared.
Agnews State Hospital	Avenue K and Lick Road, Santa Clara	1000 feet E	State Response/NPL – Certified	A major portion of the former Agnews Developmental Center (ADC) has been cleaned up under the Department of Toxic Substances Control (DTSC) oversight. Potential soil contaminants at the site were asbestos, contaminated soil, hydro-carbon solvents, and lead. Little information is available. Site listed as certified by the DTSC in 1985. USTSs and lifts in the automotive compound removed in 2022 and contaminated soil and groundwater removed; case closed by SWRCB in 2002.
Former Pycon Inc Facility	3501 Leanard Court, Santa Clara	1200 feet W	Voluntary Cleanup -	Clean up of metal impacted soils from former nickel/copper plating business. Groundwater did not have elevated copper concentrations at the site. Impacted soil was removed under the oversight of the local Agency (SFCD). DTSC reviewed data on residual copper and nickel in the soil and concluded no further action required at the site.
Pittsburgh-Des Moines Steel	3500 Bassett St, Santa Clara	450 feet W	State Response/NPL - Certified	Site was a 31-acre steel fabrication plant from 1946-1976 and a spray painting facility from 1976 to 1982. Soil contamination due not spilled lead-based paint and leakage from an underground gasoline

Site Name	Address	Distance and Direction from Alignment	Database and Status	Summary
				tank. In 1983, 779 cubic yards of contaminated soil from different areas on the site was removed. All soil covering the underground gasoline storage tank was removed and all spilled gasoline was removed. Residual soil contamination may be present.

Sources: DTSC, 2024a, and SWRCB, 2024a

The proposed Project is not located on sites identified on a list of hazardous waste and substances sites pursuant to Government Code Section 65962.5, including the Cortese List (DTSC, 2024b), however it is located near several hazardous waste and substances sites included in the SWRCB GeoTracker and DTSC EnviroStor websites (SWRCB, 2024; and DTSC, 2024a)

5.9.1.4. Schools

There are two schools located within 0.25-miles of the proposed Project:

- the Kathryn Hughes Elementary School at 4949 Calle De Escuela, 0.19-miles northeast of the northern terminus (NRS); and
- the North Valley Baptist School at 941 Clyde Ave, 0.23-miles east of the proposed Project route.

There are numerous daycare and preschool facilities located within 0.25-miles of the proposed Project, see Section 5.15, Public Services, for a list of these facilities.

5.9.1.5. Airports and Airstrips

The Norman Y. Mineta San Jose International Airport (Airport) is located approximately 0.5 miles southeast of the southern end of the Project route and the Santa Clara Towers Heliport is located approximately 1 mile west of the route. A review of the Santa Clara County Comprehensive Land Use Plan (CLUP) for the Airport indicates that a large part of the Project route crosses though three Airport's Safety Zones, is beneath a mapped flight path, portions are with the 70 dB and 75 dB Aircraft Noise Contours, and the entire Project route appears to be within FAR Part 77 Surfaces (SCCALUC, 2024). Federal Aviation Regulations (FAR) Part 77, Objects Affecting Navigable Airspace, establishes imaginary surfaces for airports and runways (FAR Part 77 Surfaces) as a means to identify objects that are obstructions to air navigation. Each surface is defined as a slope ratio or at a certain altitude above the airport elevation. The Project route appears to be located within surfaces that range from 112 to 239 feet above Mean Sea Level (MSL) FAR Part 77 Surface zone of maximum structure height, with the lower FAR Part 77 Surfaces (altitudes of 162 to 112 feet MSL from north to south) along the Project route south of Montague Expressway (SCCALUC, 2024). The proposed Project tubular steel poles may range in height from 85 to 150 feet above ground surface. Ground elevations along the Project route range from 22 to 36 ft above MSL south of Montague Expressway and from approximately 15 to 22 feet above MSL north of Montague Expressway.

5.9.1.6. Wildfire Hazards

The California Department of Forestry and Fire Protection (CAL FIRE) identifies and maps areas of significant fire hazards based on fuels, terrain, and other relevant factors. The maps identify this information as a series of Fire Hazard Severity Zones, which are progressively ranked in severity as un-zoned, moderate, high, and very high. Wildland fire protection in California is the responsibility of either the State, local, or federal government. State Responsibility Areas (SRAs) includes those areas where the financial responsibility of preventing and suppressing fires falls primarily on the State. Local Responsibility Areas (LRAs)

include incorporated cities, unincorporated county areas, cultivated agriculture lands, and portions of the desert. LRA FHSZ are mapped as either Very High Fire Hazard Severity Zones (VHFHSZ), not mapped within VHFHSZ, or if they have been reclassified from an SRAs they are still mapped at moderate, high, and very high FHSZ. LRA fire protection is typically provided by city fire departments, fire protection districts, counties, and by CALFIRE under contract to local governments (OSFM, 2024). Federal Responsibility Areas (FRA) are those located on federal lands not otherwise included in SRAs and LRAs.

The proposed Project would be located within the City of Santa Clara in the County of Santa Clara. The Fire Hazard Severity Zones Map mapping website for LRAs and SRAs (OFSM, 2024b) indicates that the Project site is not in an SRA FHSZ or a LRA VHFHSZ. The proposed Project is located in a fully urbanized developed area with no wildlands at or near the Project site. The Project site is serviced by the Santa Clara Fire Department. For more information on wildfire hazards, see Section 5.20 Wildfire.

5.9.1.7. Regulatory Background

Hazardous substances are defined by federal and State regulations that aim to protect public health and the environment. Hazardous materials have certain chemical, physical, or infectious properties that cause them to be considered hazardous. Hazardous substances are defined in the federal Comprehensive Environmental Response, Compensation, and Liability Act (CERCLA) Section 101(14), and in the California Code of Regulations (CCR), Title 22, Chapter 11, Article 2, Section 66261, which provides the following definition:

> *A hazardous material is a substance or combination of substances which, because of its quantity, con-centration, or physical, chemical or infectious characteristics, may either (1) cause, or significantly contribute to, an increase in mortality or an increase in serious irreversible, or incapacitating reversible, illness; or (2) pose a substantial present or potential hazard to human health or environment when improperly treated, stored, transported or disposed of or otherwise managed.*

For this analysis, excavated soil would be considered to be a hazardous waste if it exceeded specific CCR Title 22 criteria or criteria defined in CERCLA or other relevant federal regulations. Remediation (cleanup and safe removal/disposal) of hazardous wastes found at a site is required if excavation of these materials occurs; it may also be required if certain other activities occur. Even if soils or groundwater at a contaminated site do not have the characteristics required to be defined as hazardous wastes, remediation of the site may be required by regulatory agencies subject to jurisdictional authority. Cleanup requirements are determined on a case-by-case basis by the agency having lead jurisdiction.

Federal

Toxic Substances Control Act, Resource Conservation and Recovery Act, and Hazardous and Solid Waste Act. The federal Toxic Substances Control Act (1976) and the Resource Conservation and Recovery Act of 1976 (RCRA) established a program administered by the U.S. Environmental Protection Agency (U.S. EPA) for the regulation of the generation, transportation, treatment, storage, and disposal of hazardous waste. RCRA was amended in 1984 by the Hazardous and Solid Waste Act, which affirmed and extended the "cradle to grave" system of regulating hazardous wastes. The use of certain techniques for the disposal of some hazardous wastes was specifically prohibited by the Hazardous and Solid Waste Act.

Comprehensive Environmental Response, Compensation, and Liability Act. Congress enacted the federal CERCLA, including the Superfund program, on December 11, 1980. This law provided broad federal authority to respond directly to releases or threatened releases of hazardous substances that may endanger public health or the environment. CERCLA established requirements concerning closed and abandoned hazardous waste sites; provided for liability of persons responsible for releases of hazardous waste at these sites; and established a trust fund to provide for cleanup when no responsible party could

be identified. CERCLA also enabled the revision of the National Contingency Plan (NCP). The NCP provided the guidelines and procedures needed to respond to releases and threatened releases of hazardous substances, pollutants, and/or contaminants. The NCP also established the National Priorities List. CERCLA was amended by the Superfund Amendments and Reauthorization Act on October 17, 1986.

Clean Water Act. The Clean Water Act (CWA) is the principal federal statute protecting navigable waters and adjoining shorelines from pollution. The law was enacted with the intent of restoring and maintaining the chemical, physical, and biological integrity of the waters of the United States. Since its enactment, the CWA has formed the foundation for regulations detailing specific requirements for pollution prevention and response measures. The U.S. EPA implements provisions of the CWA through a variety of regulations, including the NCP, as described above, and the Oil Pollution and Prevention Regulations. Implementation of the CWA is the responsibility of each state.

National Pollutant Discharge Elimination System. The National Pollutant Discharge Elimination System (NPDES) permit program, created in 1972 by the CWA, helps address water pollution by regulating point sources that discharge pollutants to waters of the United States. The permit provides two levels of control: technology-based limits and water quality-based limits (if technology-based limits are not sufficient to provide protection of the water body). Under the CWA, U.S. EPA may authorize state, tribal, and territorial governments to administer the NPDES permit program, enabling them to perform many of the permitting, administrative, and enforcement aspects of the NPDES program. In states authorized to implement CWA programs, U.S. EPA retains oversight responsibilities. Within the State of California, the SWRCB issues both general permits and individual permits under the NPDES permit program.

Federal Aviation Administration, 14 CFR Part 77 – Safe, Efficient Use, and Preservation of the Navigable Airspace. Construction of a project could potentially impact aviation activities if a structure or equipment were positioned such that it would be a hazard to navigable airspace. The Federal Aviation Administration (FAA) has established reporting requirements if any construction includes equipment or structures more than 200 feet above ground level or results in an object penetrating an imaginary surface extending outward and upward at a ratio of 100 to 1 from a public or military airport runway out to a horizontal distance of 20,000 feet (approximately 3.78 miles). For areas around heliports, this same requirement applies to any construction that is more than 200 feet above ground level or would penetrate an imaginary surface extending outward and upward at a ratio 25 to 1 from a public or military heliport out to a horizontal distance of 5,000 feet.

State

California Environmental Protection Agency. The California Environmental Protection Agency (Cal/EPA) was created in 1991, which unified California's environmental authority in a single cabinet-level agency and brought the Air Resources Board (ARB), State Water Resources Control Board (SWRCB), Regional Water Quality Control Boards (RWQCBs), Integrated Waste Management Board (IWMB), DTSC, Office of Environmental Health Hazard Assessment (OEHHA), and Department of Pesticide Regulation (DPR) under one agency. These agencies were placed within the Cal/EPA "umbrella" providing for the protection of human health and the environment and to ensure the coordinated deployment of State resources. Their mission is to restore, protect and enhance the environment, to ensure public health, environmental quality, and economic vitality.

California Hazardous Waste Control Law. The California Hazardous Waste Control Law (HWCL) is administered by Cal/EPA to regulate hazardous wastes. The State of California has been granted authorization by the United States EPA to administer all Regulations under both RCRA and the State's Hazardous Waste Control laws. The HWCL lists 791 chemicals and about 300 common materials that may be hazardous; establishes criteria for identifying, packaging and labeling hazardous wastes; prescribes management controls; establishes permit requirements for treatment, storage, disposal and transportation; and identifies some wastes that cannot be disposed of in landfills.

California Department of Toxic Substance Control. Department of Toxic Substance Control (DTSC) is a department of Cal/EPA and is the primary agency in California that regulates hazardous waste, cleans-up existing contamination, and looks for ways to reduce the hazardous waste produced in California. DTSC regulates hazardous waste in California primarily under the authority of RCRA and the California Health and Safety Code. Other laws that affect hazardous waste are specific to handling, storage, transportation, disposal, treatment, reduction, cleanup, and emergency planning.

California Department of Industrial Relations, Division of Occupational Safety and Health Administration. The California Occupational Safety and Health Administration (Cal/OSHA) is the primary agency responsible for worker safety in the handling and use of chemicals in the workplace. Cal/OSHA standards are generally more stringent than federal regulations. The employer is required to monitor worker exposure to listed hazardous substances and notify workers of exposure (8 CCR Sections 337-340). The regulations specify requirements for employee training, availability of safety equipment, accident-prevention programs, and hazardous substance exposure warnings.

California Fire Plan. The CAL FIRE Strategic Plan 2024 directs each California Department of Forestry and Fire Protection (CAL FIRE) Unit to prepare a locally specific Fire Management Plan. In compliance with the California Fire Plan, individual CAL FIRE units are required to develop Fire Management Plans for their areas of responsibility. These documents assess the fire situation within each of CAL FIRE's 21 units and six contract counties. The plans include stakeholder contributions and priorities and identifies strategic areas for pre-fire planning and fuel treatment, as defined by the people who live and work with the local fire problem. The plans are required to be updated annually.

Local

Santa Clara Fire Department Community Risk Reduction Division. Senate Bill 1082 (Health and Safety Code Chapter 6.11) established the Unified Program (a unified hazardous waste and hazardous materials management regulatory program). The Unified Program is implemented at the local level by local government agencies certified by Cal EPA, which are known as Certified Unified Program Agencies (CUPAs). CUPA agencies implement all the Unified Program elements and serve as a local contact for area businesses. The CUPA for the Project area is the Santa Clara Fire Department Community Risk Reduction Division (CRRD). As CUPA for City of Santa Clara, the CRRD administers the following California programs:

- Hazardous Waste Generator Program – This program applies to businesses and facilities that generate hazardous waste in any quantity, consolidates hazardous waste generated at a remote site, or recycles more than 100 kilograms/month of excluded or exempted recyclable materials. The Santa Clara Fire Department Hazardous Materials Division maintains records and conducts inspections of hazardous waste generators within the City of Santa Clara. Businesses that generate hazardous waste are required to submit a "Hazardous Waste Generator Permit Application" when they move into the city or begin generating hazardous waste. (A properly filled out and submitted Hazardous Waste Materials Business Plan may be used in lieu of the Hazardous Waste Generator Permit Application.)
- Onsite Hazardous Waste Treatment – The Santa Clara Fire Department Hazardous Materials Division maintains records and conducts inspections of hazardous waste generators who treat wastes on-site in a Fixed Treatment Unit under Permit by Rule, Conditional Authorization, and Conditional Exemption. The Division currently does not inspect Transportable Treatment Units, full permit facilities, or standardized permit facilities.
- Underground Storage Tank (UST) – SCCRRD implements this program to prevent discharges and releases of hazardous substances from USTs. The Santa Clara Fire Department Hazardous Materials Division maintains records of and inspects underground storage tanks. All underground storage tanks are required to meet current state regulations. Permits are required for the installation or removal of underground storage tanks.

- Aboveground Storage Tank SPCC Plan – As the Certified Unified Program Agency (CUPA) for the City of Santa Clara, the Santa Clara Fire Department Hazardous Materials Division is authorized to implement the California Aboveground Petroleum Storage Act. The Santa Clara Fire Department Hazardous Materials Division inspects facilities that store petroleum products in aboveground tanks with a total petroleum storage quantity at or above 1,320 gallons for compliance with the Aboveground Petroleum Storage Act and referenced sections of the federal Spill Prevention, Control, and Countermeasure (SPCC) rule.
- Hazardous Materials Business Plan (HMBP) – Facilities that store any hazardous material at or above the State-defined thresholds, generally 55 gallons of a liquid, 200 cubic feet of a gas, and 500 pounds of a solid, are subject to a HMBP. The CRRD oversees the preparation and submittal of the HMBP. The HMBP must be kept on site in a readily accessible area. The company must also review the HMBP at least once every two years. Copies of the inventory statement, site map, and facility information included in the HMBP must be submitted to the Santa Clara Fire Department annually.
- California Accidental Release Prevention Program – Businesses that handle more than the State threshold quantity of a regulated substance must develop a Risk Management Plan (RMP); an RMP is a detailed engineering analysis of the potential accident factors present at a business and the mitigation measures that can be implemented to reduce this accident potential. The Santa Clara Fire Department Hazardous Materials Division implements the California Accidental Release Prevention Program (CalARP) within the City of Santa Clara. The program requires an assessment of the offsite hazard potential, and the implementation of a program to minimize the risk of release. Companies which are required to prepare a Risk Management Plan for the Environmental Protection Agency pursuant 40 Code of Federal Regulations (CFR), Part 68, are also required to submit a copy of their Risk Management Plan to the Santa Clara Fire Department Hazardous Materials Division.

Santa Clara County Department of Environmental Health (SCCDEH), Hazardous Materials Compliance Division (HMCD). The SCCEDEH's HMCD administers the Site Mitigation Program which oversees the Local Oversight Program and the Site Cleanup Program. The Local Oversight Program (LOP) oversees the cleanup of sites contaminated by petroleum from UST releases throughout Santa Clara County. The Site Cleanup Program (SCP) oversees the cleanup of properties contaminated by hazardous materials not exclusively associated with petroleum USTs. California Health & Safety Code Sections 101480 through 101490 state that a responsible party for a contaminated site may request local agency oversight of site assessment and remediation activities. In addition, the HMCD administers the Hazardous Materials Storage Ordinance (County Ordinance No. NS-517.31) and the Toxic Gas Ordinance (County Ordinance No. NS-517.44).

County of Santa Clara Emergency Operations Plan. In January 2022, the County of Santa Clara adopted an Emergency Operations Plan (EOP) to address the planned response of the County of Santa Clara to emergency situations associated with natural disasters and technological incidents, as well as chemical, biological, radiological, nuclear and explosive emergencies. The EOP establishes the emergency organization, assign tasks, specifies policies and general procedures, and provides for coordination of planning efforts for emergency events such as earthquake, flooding, dam failure, and hazardous materials responses (OEM, 2022)

City of Santa Clara General Plan. The purpose of the City's safety policies is to identify potential hazards and measures that can lessen risks for the City's population and property. The following policies in the General Plan generally relate to the proposed Project (City of Santa Clara, 2014):

- **Policy 5.10.5-P22.** Regulate development on sites with known or suspected contamination of soil and/or groundwater to ensure that construction workers, the public, future occupants and the environment are adequately protected.
- **Policy 5.10.5-P23.** Require appropriate clean-up and remediation of contaminated sites.

- **Policy 5.10.5-P24.** Protect City residents from the risks inherent in the transport, distribution, use and storage of hazardous materials.
- **Policy 5.10.5-P27.** Locate hazardous waste management facilities in areas designated as Heavy Industrial on the Land Use Diagram if compatible with surrounding uses and consistent with the County Hazardous Waste Management Plan.

5.9.2. Environmental Impacts and Mitigation Measures

(a) Would the project create a significant hazard to the public or the environment through the routine transport, use, or disposal of hazardous materials?

LESS THAN SIGNIFICANT WITH MITIGATION INCORPORATED - CONSTRUCTION The use of hazardous materials during Project construction would be minimal. Hazardous materials may include gasoline, diesel fuel, hydraulic oils, equipment coolants, and any generated wastes that may include these materials. These materials are considered hazardous because they are flammable and/or contain toxic compounds, such as volatile organic compounds and heavy metals. Wastes considered hazardous by the State of California would be transported and disposed of according to applicable federal, State, and local regulations, as described above under applicable Regulations. Fueling of construction equipment and vehicles would be performed in designated areas. However, minor spills or releases of hazardous materials could occur due upset or improper handling and/or storage practices during construction activities.

Therefore, implementation of mitigation measure MM H-1 (Hazardous Substance Control and Emergency Response) would reduce potential impacts associated with hazardous material transport, use, and disposal during construction, which would ensure that Project construction would not create a significant hazard to the public or the environment through the routine transport, use, or disposal of hazardous materials. Further, SVP would also implement its existing hazardous substance control and emergency response procedures.

Mitigation Measure for Transport, Use, or Disposal of Hazardous Materials

MM H-1 **Hazardous Substance Control and Emergency Response.** SVP shall implement its hazardous substance control and emergency response procedures as needed. These procedures identify methods and techniques to minimize the exposure of the public and site workers to potentially hazardous materials during all phases of Project construction through operation. They address worker training appropriate to the site worker's role in hazardous substance control and emergency response. The procedures also require implementing appropriate control methods and approved containment and spill-control practices for construction and materials stored on site. If it is necessary to store chemicals on site, they shall be managed in accordance with all applicable regulations. Material safety data sheets shall be maintained and kept available on site, as applicable.

All hazardous materials and hazardous wastes shall be handled, stored, and disposed of in accordance with all applicable regulations, by personnel qualified to handle hazardous materials. The hazardous substance control and emergency response procedures include, but are not limited to, the following:

- Proper disposal of potentially contaminated soils resulting from leaks or spills.
- Establishing site-specific buffers for construction vehicles and equipment located near sensitive resources.
- Emergency response and reporting procedures to address hazardous material spills.

- Stopping work at that location and contacting the City Fire Department Hazardous Materials Division immediately if visual contamination or chemical odors are detected. Work will be resumed at this location after any necessary consultation and approval by the Hazardous Materials Division.

SVP shall complete its Emergency Action Plan Form as part of Project tailboard meetings. The purpose of the form is to gather emergency contact numbers, identify first aid locations and provide other tailboard safety information.

LESS THAN SIGNIFICANT – OPERATION AND MAINTENANCE. Other than substances associated with motor vehicles that would be used for inspections and maintenance, no hazardous materials are associated with maintenance and operation of the proposed Project. SVP would implement existing operation and maintenance policies to address hazardous materials use after the Project construction is complete. Impacts associated with the transport, use, and disposal of hazardous materials would be less than significant.

(b) Would the project create a significant hazard to the public or the environment through reasonably foreseeable upset and accident conditions involving the release of hazardous materials into the environment?

LESS THAN SIGNIFICANT WITH MITIGATION INCORPORATED - CONSTRUCTION. Accidental spills of motor vehicle fluids associated with construction vehicles could occur during construction of the proposed Project as discussed in item (a) above. The minimal amounts of hazardous materials anticipated for use in the Project coupled with implementation of mitigation measure MM HM-1 requirements would reduce potential impacts by requiring the development and implementation of hazardous substance control and health and safety measures.

LESS THAN SIGNIFICANT – OPERATION AND MAINTENANCE. No hazardous materials are associated with maintenance and operation of the Project except motor vehicle fluids in inspection and maintenance vehicles. SVP would implement existing operation and maintenance policies to address hazardous materials use after the Project construction is complete.

(c) Would the project emit hazardous emissions or handle hazardous or acutely hazardous materials, substances, or waste within one-quarter mile of an existing or proposed school?

LESS THAN SIGNIFICANT. Numerous daycare facilities (listed in section 5.15, Public Services), and two schools, the Kathryn Hughes Elementary School and the North Valley Baptist School, would be located within 0.25-mile of the proposed Project route. The proposed Project will not use, store, or transport any acutely hazardous materials and would only use limited quantities of typical construction related hazardous materials such as cleaning solvents, paints, adhesives, vehicle fuels, oil, hydraulic fluid, and other vehicle and equipment maintenance fluids. Refueling of construction equipment and vehicles will take place at a designated site. All hazardous materials would be stored, used, transported, and disposed of in accordance with federal, state, and local regulations. Therefore, impacts from project-related hazardous materials use during proposed Project construction would be less than significant.

No hazardous materials are associated with maintenance and operation of the Project except motor vehicle fluids in inspection and maintenance vehicles. SVP would implement existing operation and maintenance policies to address hazardous materials use after the Project construction is complete.

(d) Would the project be located on a site that is included on a list of hazardous materials sites compiled pursuant to Government Code Section 65962.5 and, as a result, would it create a significant hazard to the public or the environment?

LESS THAN SIGNIFICANT WITH MITIGATION INCORPORATED. The proposed Project alignment is not located on hazardous materials sites compiled pursuant to Government Code Section 65962.5, including the Cortese List. However, numerous hazardous material sites are located in the proposed Project vicinity, including

many case closed LUST sites, several SWRCB Cleanup Program sites, and DTSC EnviroStor State Response and Voluntary Cleanup sites. Existing and unknown contamination from these sites or other industrial sites in the area may have spread to the proposed Project route due to the shallow groundwater in the Project area. Groundwater in the project vicinity is shallow with water levels of approximately 5 to 13 feet below ground surface (SWRCB, 2024).

Ground disturbing activities for the proposed Project, including excavation/auguring for tubular steel poles and pole foundations, and trenching and excavation for underground installation of ducting and vaults for Option 2, would have the potential to encounter known or unidentified environmentally contaminated soil or groundwater. This would potentially result in exposing workers, the public, and the environment to hazardous materials. Contaminated soil or groundwater encountered during construction and considered to be hazardous by the State of California would be handled, stored, transported, and disposed of according to applicable federal, State, and local regulations, as described above under applicable Regulations.

Implementation of mitigation measure MM H-2 (Soil and Groundwater Management) would reduce impacts related to encountering known or unidentified soil or groundwater contamination and ensure that proposed Project construction would not result in adverse effects to workers, the public, or the environment through handling, storage, or disposal of contaminated soil or groundwater.

Mitigation Measure for Contaminated Soil and Groundwater

MM H-2 **Soil and Groundwater Management.** Prior to Project construction and ground disturbing activities, SVP shall implement an evaluation of potential soil and groundwater contamination at locations along the Project route where excavation, drilling, auguring, or other significant ground disturbance will occur to prevent mobilization of contaminants and exposure of workers and the public. The evaluation shall be completed at least 60 days prior to the start of Project construction. The evaluation of soil and groundwater shall include, but not be limited to, the following:

- If contaminants below regulatory screening levels are identified, SVP shall coordinate with SCCDEH regarding soil reuse guidelines;
- If contaminants exceeding applicable regulatory screening levels for construction workers and residential users published by the RWQCB, DTSC, or the Environmental Protection Agency (EPA) (except for arsenic which is naturally occurring in the area), are encountered during the Soil and Groundwater Characterization Study SVP shall obtain regulatory oversight from SCCDEH and shall prepare a Soil and Groundwater Management Plan (SGMP); and
- Soils found in concentrations above established thresholds (except for arsenic) shall be removed and disposed of according to California Hazardous Waste Regulations.

If a SGMP is needed, the SGMP shall be prepared to guide activities during excavation and other ground disturbing activities to ensure that identified contaminated soils or groundwater are handled, removed, and disposed of properly. The SGMP shall be prepared by a licensed qualified professional and submitted to SCCDEH at least 30 days prior to Project construction and shall include, but not be limited to, the following elements:

- Procedures and protocols for the safe handling, storage, stockpiling, and disposal of contaminated soils;
- Contaminated soil excavated from the site shall be hauled off-site and disposed of at a licensed hazardous materials disposal site;

- Protocols to manage and disposed of contaminated groundwater that may be encountered during trenching or subsurface excavation activities, and if dewatering is required; and
- Procedures and protocols to follow in the event soils or groundwater not previously identified as contaminated and suspected of being contaminated (on the basis of visual, olfactory, or other evidence) are identified during site grading or excavation activities or dewatering activities to allow for proper identification and characterization, and subsequent proper handling, removal, and disposal.

(e) For a project located within an airport land use plan or, where such a plan has not been adopted, within two miles of a public airport or public use airport, would the project result in a safety hazard or excessive noise for people residing or working in the project area?

LESS THAN SIGNIFICANT. The Norman Y. Mineta San Jose International Airport (Airport) is located approximately 0.5 miles east of the southern end of the Project route and the Project site is: beneath a mapped flight path; located between the 70 dB and 75 dB Aircraft Noise Contours; located between the 162 and 262 feet above Mean Sea Level FAR Part 77 Surface zone of maximum structure height; and is within the Airport's Safety Zones (SCCALUC, 2016). The Project would not include on-site staff that would be at increased hazards due aviation hazards and generally the height and form of the proposed project structures would be similar to the existing 115 kV transmission structures located adjacent to roadways throughout the City. However, the heights of the construction equipment and of the tubular steel poles (ranging from 85 to 150 feet in height) may exceed FAR Part 77 Surface zone of maximum structure height altitudes along the southern portion of the Project route. Because of the heights of Project structures, SVP would submit a Notice of Proposed Construction or Alteration to the Federal Aviation Administration (FAA) at least 90 days prior to Project construction. As a result of this consultation, SVP will modify structures as directed by the FAA, which may result in modification of the height or location of the structures, or the addition of lighting and marker balls. Compliance with FAA Part 77 regulations would reduce impacts related to aviation hazards to less than significant.

(f) Would the project impair implementation of or physically interfere with an adopted emergency response plan or emergency evacuation plan?

LESS THAN SIGNIFICANT WITH MITIGATION INCORPORATED. Construction-related temporary short-term lane closures or disruptions may be necessary during the proposed Project's construction period. Some road closures and/or one-way traffic controls would be required to allow for certain construction activities and to maintain public safety. These closures and controls would temporarily decrease traffic flow in the project area, particularly on Lafayette Street.

In June 2016, the Santa Clara City Council adopted a new comprehensive emergency response plan to replace the prior plan adopted in 2008. The plan provides a legal framework for the management of emergencies and guidance for the conduct of business in the City's Emergency Operations Center (EOC), including collaboration and coordination between different responsible agencies. The Emergency Operations Plan (EOP) establishes responsibilities and procedures for addressing potential emergencies related to disasters such as earthquakes, flooding, and dam failure; technological incidents; hazardous materials spills or releases; and incidents of domestic terrorism involving weapons of mass destruction, such as Chemical, Biological, Radiological, Nuclear, and Explosive (CBRNE) devices. The EOP conforms to the requirements of the National Incident Management System (NIMS) mandated by the U.S. Department of Homeland Security. The Santa Clara EOP also builds on and coordinates with the State's Standardized Emergency Management System (SEMS) and the California State Emergency Plan.

The EOP does not identify specific emergency shelters or evacuation routes in Santa Clara, though schools are identified as preferred facilities for lodging large numbers of people, with churches, hotels, and motels

also likely to function as mass care facilities during large-scale disasters. The proposed Project would not interfere with operation of any emergency shelters and would not permanently close off or otherwise alter any existing streets, and therefore would not create any obstructions to potential evacuation routes that might be used in the event of an emergency.

During construction, any temporary lane closures would be coordinated with local agencies as specified in Transportation and Traffic Mitigation Measure T-1 (Construction Traffic Control Plan) (see Section 5.16, Traffic and Transportation). Additionally, any temporary road closures would follow applicable regulations and would not impede emergency response. Adherence to the City's EOP, coupled with implementation of mitigation measure MM T-1 during construction would ensure that the Project would not impair the implementation of, or physically interfere with, an adopted emergency response or evacuation plan; therefore, the impact that would occur related to emergency response during construction would be less than significant.

Mitigation Measure for Interference with an Adopted Emergency Response Plan or Emergency Evacuation Plan

MM T-1 **Construction Traffic Control Plan** [See Section 5.17.2 (Transportation) for complete text of the mitigation measure.]

(g) Would the project expose people or structures, either directly or indirectly, to a significant risk of loss, injury, or death involving wildland fires?

NO IMPACT – CONSTRUCTION. The proposed Project is in an urban setting with no risk of wildland fire owing to the lack of extensive vegetation in the area. The Project route and surrounding areas are located in an LRA area and are not in mapped VHFHSZ as designated on CAL FIRE wildland fire hazard maps (OSFM, 2024).

LESS THAN SIGNIFICANT– OPERATION AND MAINTENANCE. Operation and maintenance activities would be incorporated into SVP's existing O&M schedule for the existing transmission lines. As with current operation and maintenance, SVP would comply with all current federal and State laws related to vegetation clearance and fire prevention.

5.10. Hydrology and Water Quality

HYDROLOGY AND WATER QUALITY Would the project:	Potentially Significant Impact	Less Than Significant With Mitigation Incorporated	Less Than Significant Impact	No Impact
(a) Violate any water quality standards or waste discharge requirements or otherwise substantially degrade surface or ground water quality?	☐	☒	☐	☐
(b) Substantially decrease groundwater supplies or interfere substantially with groundwater recharge such that the project may impede sustainable groundwater management of the basin?	☐	☐	☒	☐
(c) Substantially alter the existing drainage pattern of the site or area, including through the alteration of the course of a stream or river or through the addition of impervious surfaces, in a manner which would:				
i) result in substantial erosion or siltation on- or off-site;	☐	☐	☒	☐
ii) substantially increase the rate or amount of surface runoff in a manner which would result in flooding on- or offsite;	☐	☐	☒	☐
iii) create or contribute runoff water which would exceed the capacity of existing or planned stormwater drainage systems or provide substantial additional sources of polluted runoff; or	☐	☐	☒	☐
iv) impede or redirect flood flows?	☐	☐	☒	☐
(d) In flood hazard, tsunami, or seiche zones, risk release of pollutants due to project inundation?	☐	☐	☒	☐
(e) Conflict with or obstruct implementation of a water quality control plan or sustainable groundwater management plan?	☐	☐	☒	☐

Significance criteria established by CEQA Guidelines, Appendix G.

5.10.1. Setting

5.10.1.1. Surface Waters and Drainage

Surface water drainage in the City of Santa Clara is primarily to the Guadalupe River (east of the Project); San Tomas Aquino Creek, also sometimes mapped as the southern extension of Saratoga Creek; (west of the Project); Saratoga Creek (southwest of the Project), and Calabazas Creek (west of the Project) (City of Santa Clara, 2014). The proposed Project route is located approximately equidistantly between San Tomas Aquino Creek to the west and Guadalupe River to the east. The Project site drains to the San Tomas Aquino Creek within the San Jose International Airport-Frontal San Francisco Bay Estuaries Watershed.

Saratoga Creek (and San Tomas Aquino Creek) is listed as an impaired water body by the State Water Resource Control Board (SWRCB) 303 (d) list for diazinon (a pesticide) and trash; the diazinon TMDL listing is from 2007 and is being addressed by the USEPA approved San Francisco Bay Urban Creeks Diazinon TMDL and the trash is being addressed by implementing the trash control provisions of the Water Quality Control Plan for Inland Surface Waters, Enclosed Bays, and Estuaries of California (SWRCB, 2018).

All of the streams and rivers crossing the City originate in the Santa Cruz Mountains, which are largely undeveloped. These streams drain northward across Santa Clara Valley to discharge into San Francisco Bay. Within the City, these regionally important streams have been substantially channelized and modified to reduce flood hazards. The City has a storm drainage system that consists of curb inlets that collect and channel surface water, such as rainwater, into a series of storm sewers beneath City's roadways. The stormwater is transported through the underground pipe to the 4 streams within the City. These streams then directly flow into the San Francisco Bay (City of Santa Clara, 2014).

5.10.1.2. Groundwater Resources

The Santa Clara Valley is primarily underlain by the Santa Clara Valley groundwater basin, which is divided into three subbasins: the San Mateo Plain, the Niles Cone, and the Santa Clara subbasins. The proposed Project is within the Santa Clara Subbasin (DWR, 2024). The Santa Clara Subbasin is approximately 240 square miles, covering the middle and southern end of the Santa Clara Basin. The water bearing formations of the Santa Clara subbasin include Plio-Pleistocene age Santa Clara Formation of and Pleistocene to Holocene younger alluvium (DWR, 2003). Water production well depths in the Santa Clara Valley average about 278 feet below the ground surface and yield an average of 425 gallons per minute (City of Santa Clara, 2014).

In contrast to other areas adjacent to San Francisco Bay, where saltwater intrusion has been an issue, total dissolved solids in the groundwater have not been a concern for the City. Nitrates have also not been a problem and are below one-half of allowable levels in water extracted from the City's wells. However, manganese, a naturally occurring metal in groundwater, has been detected at one well, resulting in the City installing a manganese removal system for that well before putting it into production (City of Santa Clara, 2014). Water quality in the major producing aquifers in the subbasin is generally of a bicarbonate type, with sodium and calcium bicarbonate the principal cations. Although hard, is of good to excellent quality and suitable for most uses (DWR, 2003).

5.10.1.3. Flood Hazard Areas

On Federal Emergency Management Agency (FEMA) flood maps (FEMA, 2009), the Project site is primarily mapped as Zone X - Area with Reduced Flood Risk due to Levee, however, there are some portions of the proposed Project that intersect with areas mapped as Zone X – 0.2% Annual Chance Flood Hazard. The proposed Project would be adjacent to areas that are mapped as Zone AO with a depth of 1 foot, and AH with a base flood elevation of 23 to 32 feet. Special Flood Hazard Zone AO are areas that are river or stream flood hazard areas or areas with a 1% or greater chance of shallow flooding each year, usually in the form of a sheet flow, with an average depth ranging from 1 to 3 feet. Zone AH are areas with a 1% annual chance of shallow flooding usually in the form of a pond, with an average depth ranging from 1 to 3 feet (FEMA, 2009).

According to the City's General Plan from 2014, Figure 5.10-2, the proposed Project is wholly within the Lexington Dam inundation area and is partially within the Anderson Dam inundation area. Some portions of the proposed Project are immediately adjacent to a small Special Flood Hazard Area, as identified above as Zone AH, however the Project site is not vulnerable to sea level rise. The General Plan also states that the City has adopted the Flood Damage Prevention Code, 1987, ed., to address requirements for flood protection (City of Santa Clara 2014).

5.10.1.4. Water Supply

Potable water for the City comes from a combination of sources: City of San Francisco's Hetch Hetchy aqueduct system, Santa Clara Valley Water District, and groundwater from City-owned wells. Groundwater comprises almost 70 percent of the City's water supply. Recycled wastewater is also used in the City for certain landscape irrigation, industrial, and construction purposes (City of Santa Clara, 2014).

Regulatory Background

Federal

Clean Water Act. The Clean Water Act (CWA; 33 U.S.C. Section 1251 et seq.), formerly the Federal Water Pollution Control Act of 1972, was enacted with the intent of restoring and maintaining the chemical, physical, and biological integrity of the waters of the United States. The CWA requires states to set standards to protect, maintain, and restore water quality through the regulation of point source and

certain non-point source discharges to surface water. Those discharges are regulated by the National Pollutant Discharge Elimination System (NPDES) permit process (CWA Section 402). NPDES permitting authority is delegated to, and administered by, California's nine Regional Water Quality Control Boards (RWQCB). In addition, the State Water Resources Control Board (SWRCB) regulates the NPDES stormwater program. The Proposed Project is under the jurisdiction of the San Francisco Bay Regional Water Quality Control Board (Region 2) and the SWRCB.

Projects that disturb one or more acres are required to obtain NPDES coverage under the California General Permit for Discharges of Storm Water Associated with Construction Activity. The Construction General Permit requires the development and implementation of a Storm Water Pollution Prevention Plan (SWPPP). The SWPPP describes Best Management Practices (BMPs) the discharger will use to protect stormwater runoff. The SWPPP must contain a visual monitoring program and a chemical monitoring program for "non-visible" pollutants to be implemented if there is a failure of BMPs.

Section 401 of the CWA requires that any activity, including river or stream crossing during road, pipeline, or transmission line construction, which may result in discharges into a State waterbody, must be certified by the RWQCB through the issuance of a Waste Discharge Requirement. This certification ensures that the proposed activity does not violate State or federal water quality standards. The limits of nontidal waters extend to the Ordinary High Water Mark (OHWM), defined as the line on the shore established by the fluctuation of water and indicated by physical characteristics, such as natural line impressed on the bank, changes in the character of the soil, and presence of debris.

Section 404 of the CWA requires a permit for construction activities involving placement of any kind of fill material into waters of the U.S. or wetlands. The U.S. Army Corps of Engineers (USACE) may issue either individual, site-specific permits or general, nationwide permits for discharge into U.S. waters. A Water Quality Certification pursuant to Section 401 of the CWA is required for Section 404 permit actions. If applicable, construction would also require a request for Water Quality Certification (or waiver thereof) from the Central Valley RWQCB and/or the Lahontan RWQCB.

Section 303(d) of the CWA (CWA, 33 USC 1250, et seq., at 1313(d)) requires states to identify impaired waterbodies as those which do not meet water quality standards. States are required to compile this information in a list and submit the list to the USEPA for review and approval. This list is known as the Section 303(d) list of impaired waters. As part of this listing process, states are required to prioritize waters and watersheds for future development of Total Maximum Daily Load (TMDL) requirements. A TMDL is the maximum amount of a pollutant that a particular waterbody can receive while still meeting water quality standards, or an allocation of that water pollutant deemed acceptable to receiving waters. The SWRCB and RWQCBs have ongoing efforts to monitor and assess water quality, to prepare the Section 303(d) list, and to develop TMDL requirements.

State

Porter-Cologne Water Quality Control Act. The Porter Cologne Water Quality Control Act of 1967, Water Code Section 13000 et seq., requires the SWRCB and the nine RWQCBs to adopt water quality criteria to protect State waters. These criteria include the identification of beneficial uses, narrative and numerical water quality standards, and implementation procedures. The criteria for the Project area are contained in the Water Quality Control Plan (also referred to as a Basin Plan) for the San Francisco RWQCB. Constraints in the water quality control plans relative to the proposed Project relate primarily to the avoidance of altering the sediment discharge rate of surface waters, and the avoidance of introducing toxic pollutants to the water resource. A primary focus of water quality control plans is to protect designated beneficial uses of waters. In addition, anyone proposing to discharge waste that could affect the quality of the waters of the state must make a report of the waste discharge to the Regional Water Board or State Water Board as appropriate, in compliance with Porter-Cologne.

California Water Code Section 13260. California Water Code Section 13260 requires that any person discharging waste, or proposing to discharge waste, within any region that could affect the quality of the waters of the State, other than into a community sewer system, must submit a report of waste discharge to the applicable RWQCB. Any actions related to the proposed Project that would be applicable to Section 13260 would be reported to the San Francisco RWQCB, as applicable.

Local

Safety Policies. The purpose of the City's safety policies is to identify potential hazards and measures that can lessen risks for the City's population and property. The following policies in the General Plan generally relate to the proposed Project (City of Santa Clara, 2014):

- **Policy 5.10.5-P11.** Require that new development meet stormwater and water management requirements in conformance with State and regional regulations.
- **Policy 5.10.5-P13.** Require that development complies with the Flood Damage Protection Code.
- **Policy 5.10.5-P14.** Coordinate with the Federal Emergency Management Agency to ensure appropriate designation and mapping of floodplains.
- **Policy 5.10.5-P16.** Require new development to implement erosion and sedimentation control measures to maintain an operational drainage system, preserve drainage capacity and protect water quality.
- **Policy 5.10.5-P21.** Require that storm drain infrastructure is adequate to serve all new development and is in place prior to occupancy.
- **Policy 5.10.5-P22.** Regulate development on sites with known or suspected contamination of soil and/or groundwater to ensure that construction workers, the public, future occupants and the environment are adequately protected.

5.10.2. Environmental Impacts and Mitigation Measures

(a) Would the project violate any water quality standards or waste discharge requirements or otherwise substantially degrade surface or ground water quality?

LESS THAN SIGNIFICANT WITH MITIGATION. Disturbance of soil during construction could result in soil erosion and lowered water quality through increased turbidity and sediment transport into the storm drain system. There are no watercourses or other water bodies within or adjacent to the Project. Drainage from the Project is directed to the municipal storm drain system which eventually flows into San Francisco Bay. The City participates in the regional program for the Santa Clara Valley Urban Runoff Pollution Prevention Program (SCVURPPP). Santa Clara is committed to improving water quality in the Bay and streams, reducing urban runoff pollution through the implementation of the City's Urban Runoff Management Plan (URMP). The City's URMP, along with other local Urban Runoff Management Plans, collectively constitute the regional plan that conforms to the federal requirements of the National Pollution Discharge Elimination System (City of Santa Clara, 2014).

During construction, there is also the potential for violations of water quality standards or waste discharge requirements to occur from accidental leaks, spills, or releases of hazardous or potentially hazardous materials. There also is a potential for violations if existing contamination is encountered during construction.

The proposed Project's transmission line is approximately 2.24 miles long. Work would also occur at the existing NRS, KRS, and Palm Substation. Laydown or staging areas would also be required for Project material and equipment. While Option 1 (overhead line) would create less ground disturbance than Option 2 (partial underground line) it is assumed that over 1 acre of disturbance would be required for construction of the line under either option, triggering the need for a SWPPP. Implementation of mitigation measure MM HYD-1 is recommended to ensure that erosion control best management practices (BMPs) would be

in place to reduce potential water quality impacts to a less than significant level whether or not a SWPPP is triggered by State law. In addition to mitigation measure MM HYD-1, complying with applicable water quality standards, including obtaining and adhering to any required water quality permits, would offer sufficient protection to avoid significant adverse impacts to water quality from erosion and sedimentation. Applicable water quality standards and regulations are described above, in Section 5.10.1.

In the event of an accidental spill, adherence to regulatory standards and regulations, as well as implementation of mitigation measure MM HM-1 (Hazardous Substance Control and Emergency Response) (see Section 5.9), would collectively ensure that a suite of BMPs would be applied to minimize the potential for an accidental release of hazardous materials to occur, to quickly and effectively address any such leak, and to quickly and effectively respond to any existing contamination produced or encountered during construction. The intent of regulatory standards is to prevent degradation of water quality to the point where beneficial uses would be impaired. Therefore, potential impacts to water quality standards or waste discharge requirements or other substantial degradation of surface or groundwater quality during construction would be less than significant with implementation of mitigation measures HYD-1 and HM-1 and compliance with regulatory standards. With these mitigation measures, no violations would be expected from operation of the proposed Project.

Mitigation Measures for Water Quality

MM HYD-1 **SWPPP or Erosion Control Plan Development and Implementation.** Following Project approval, SVP will prepare and implement a SWPPP, if required by State law, or erosion control plan to minimize construction impacts on surface water and groundwater quality. Implementation of the SWPPP or erosion control plan will help stabilize graded or disturbed areas and reduce erosion and sedimentation. The plan will designate BMPs that will be adhered to during construction activities. Erosion and sediment control measures, such as straw wattles, covers, and silt fences, may be installed before the onset of winter rains or any anticipated storm events if soils are not stabilized. Suitable stabilization measures will be used to protect exposed areas during construction activities, as necessary. During construction activities measures will be in place to prevent contaminant discharge.

The Project SWPPP or erosion control plan will include erosion control and sediment transport BMPs to be used during construction. BMPs, where applicable, will be designed by using specific criteria from recognized BMP design guidance manuals. Erosion-minimizing efforts may include measures such as properly containing stockpiled soils.

Erosion control measures identified will be installed in an area before construction begins during the wet season and before the onset of winter rains or any anticipated storm events. Temporary measures such as silt fences or wattles, intended to minimize sediment transport from temporarily disturbed areas, will remain in place until disturbed areas have stabilized. The plan will be updated during construction as required by the SWRCB.

A worker education program shall be established for all field personnel prior to initiating fieldwork to provide training in the appropriate application and construction of erosion and sediment control measures contained in the SWPPP. This education program will also discuss appropriate hazardous materials management and spill response. Compliance with these requirements will be ensured by the on-site construction contractor.

MM H-1 **Hazardous Substance Control and Emergency Response** (see full text in Section 5.9, Hazards and Hazardous Materials)

(b) Would the project substantially decrease groundwater supplies or interfere substantially with groundwater recharge such that the project may impede sustainable groundwater management of the basin?

LESS THAN SIGNIFICANT. Groundwater supplies could be adversely affected through direct consumption of groundwater resources or indirect depletion of groundwater supplies such as through conducting de-watering activities where the water is not returned to the subsurface. In the case of the proposed Project there would be minimal demand for water.

A water truck may be to support dust suppression during ground disturbing work and for foundation slurry preparation during construction of the drilled concrete pier foundations for the tubular steel poles. These uses would not result in a significant demand for water resources from the City, where groundwater makes up 70 percent of the City's water supply. The existing supply is adequate for use during construction activities. Dewatering may be necessary if groundwater is encountered, but given the depth to the groundwater table, water encountered during project excavation would be shallow and local. The small amount of dewatering would therefore not result in a substantial decrease of the groundwater supply or interfere substantially with groundwater recharge or sustainable groundwater management. Overall, any impacts to groundwater would be less than significant.

(c) Would the project substantially alter the existing drainage pattern of the site or area, including through the alteration of the course of a stream or river or through the addition of impervious surfaces, in a manner which would:

i. result in substantial erosion or siltation on- or off-site;

LESS THAN SIGNIFICANT. The proposed Project will be built entirely overhead under Option 1, with a possibility of a portion of transmission line being underground under Option 2. The overhead transmission line has no potential to alter the course of a stream or river, nor to substantially alter the existing drainage pattern of the site or area. The proposed Project is in an urban area, which has extensive impervious surfaces, therefore increases in impervious areas and soil compaction would be slight compared to the impervious area of the surrounding urban landscape. The proposed Project would therefore have a less than significant impact on drainage patterns or runoff generation.

ii. substantially increase the rate or amount of surface runoff in a manner which would result in flooding on- or off-site?

LESS THAN SIGNIFICANT. As described under Item (c)(i) above, the Project area has extensive impervious surfaces except landscaping. The proposed Project would occur in and adjacent to paved areas and, if underground construction is required, the disturbed area would be restored. This would have a less than significant impact on drainage patterns or runoff generation. The site would drain to the existing storm-water drainage system, similar to existing condition. Impacts on flooding would therefore be less than significant.

iii. create or contribute runoff water which would exceed the capacity of existing or planned stormwater drainage systems or provide substantial additional sources of polluted runoff; or

LESS THAN SIGNIFICANT. As discussed above, the Project will not substantially increase the rate or amount of runoff. Existing or planned stormwater drainage systems would therefore not be adversely affected. Except as described under Item (a) above, the Project has no features that would generate substantial polluted runoff. This impact would be less than significant.

iv. impede or redirect flood flows?

LESS THAN SIGNIFICANT. The majority of the proposed Project route is within FEMA Zone X Area with Reduced Flood Risk due to Levee. A small portion of the route intersects Zone X – 0.2% Annual Chance Flood Hazard. Additionally, the proposed Project is adjacent to a FEMA-designated Special Flood Hazard Areas (Zone AO,

and Zone AH). However, the proposed Project would be installing transmission line poles, which have a very small footprint compared to the width of the floodplain. The proposed Project would not pose a substantial obstruction to flood flows such that flood flows would be impeded or redirected in any substantial way; therefore, the impact would be less than significant.

(d) In flood hazard, tsunami, or seiche zones, risk release of pollutants due to project inundation?

LESS THAN SIGNIFICANT. The proposed Project site is not subject to the effects of a tsunami and is not near a waterbody that would create seiche effects. The majority of the proposed Project route is within FEMA Zone X Area with Reduced Flood Risk due to Levee. A small portion of the route intersects Zone X – 0.2% Annual Chance Flood Hazard. However, the proposed overhead lines would be well above the level of flooding with no opportunity to release pollutants as a result of flooding. NRS, which are not in the floodplain, would require minor improvements to accommodate the new circuit. The Project is not in a tsunami or seiche zone. This impact is therefore less than significant.

(e) Conflict with or obstruct implementation of a water quality control plan or sustainable groundwater management plan?

LESS THAN SIGNIFICANT. As described in Item (a) above, the Project's effect on water quality will be less than significant with mitigation. Although the nearby San Tomas Aquino/Saratoga Creek is listed as an impaired water body, there are no features of the Project that would adversely impact the diazinon or trash load of the creek. There are no features of the Project that would otherwise generate water quality impairments, nor are there any components of the Project construction or use that could otherwise conflict with the implementation of a water quality control plan. The Project will have minimal water use, mainly during construction, which will be obtained from local water purveyors. There are no features of the Project that would otherwise have any effect on groundwater management. This impact is therefore less than significant.

5.11. Land Use and Planning

LAND USE PLANNING Would the project:	Potentially Significant Impact	Less Than Significant With Mitigation Incorporated	Less Than Significant Impact	No Impact
(a) Physically divide an established community?	☐	☐	☒	☐
(b) Cause a significant environmental impact due to a conflict with any land use plan, policy, or regulation adopted for the purpose of avoiding or mitigating an environmental effect?	☐	☐	☐	☒

Significance criteria established by CEQA Guidelines, Appendix G.

5.11.1. Setting

The proposed Project would be in an urban, heavily developed area in the City of Santa Clara within Santa Clara County, CA. The northern end of the proposed Project is at the North Receiving Station (NRS) located west of Lafayette Street and south of Bill Wash Way and immediately south of the Levi's Stadium complex. The southern end of the proposed Project is at Kifer Receiving Station (KRS) located northwest of the intersection of Lafayette Street and Central Expressway.

Various zoning designations apply to land along the Project alignment, including Heavy Industrial (MH), Light Industrial (ML), Medium Density Multiple Dwelling (R3-25D), Neighborhood Commercial (CN), Planned Development (PD), Single Family (R1-6L), and Planned Development – Master Community (PD-MC). The NRS and KRS sites are zoned as Public or Quasi Public (B) (City of Santa Clara 2023a).

"MH" designations permit primary manufacturing, refining and similar activities, warehousing and distribution, and data centers. "ML" designations permit a range of light industrial uses, including general service, warehousing, storage, distribution, and manufacturing.

"R3-25D" designations permit residential developments with 25 units per gross acre, with a variety of housing types such as low-rise apartments or townhouses. This designation is primarily intended for areas with access to collector streets or in close proximity to neighborhood centers. "CN" designations are intended for local-serving retail, personal service, and office uses that meet neighborhood needs, such as supermarkets, stores, medical facilities, restaurants, hair salons, and banks. "R1-6L" designations are designated for single family homes, or very low-density residential uses with detached dwelling units. "B" designations allow a variety of public and quasi-public uses, including government offices, fire and police facilities, transit stations, commercial adult care and childcare centers, religious institutions, schools, cemeteries, hospitals and convalescent care facilities, places of assembly, and other facilities that have a unique public character as their primary use. (City of Santa Clara, 2014)

"PD" designations and "PD-MC" designations permit property with a minimum project size of 25 acres, or a master community, and are intended to allow modification of requirements established by other ordinances and diversification in the relationship of different uses, while ensuring compliance with the General Plan (City of Santa Clara 2023b).

Regulatory Background

This section includes a description of the land use and planning regulatory framework. There are no federal regulations or policies related to land use and planning applicable to the Project.

Local

City of Santa Clara General Plan. The City's land use policies consider the effects of development on public facilities and infrastructure. The following policy in the General Plan generally relates to the proposed Project (City of Santa Clara, 2014):

- **Policy 5.3.1- P1.** Preserve the unique character and identity of neighborhoods through community-initiated neighborhood planning and design elements incorporated in new development.
- **Policy 5.3.1- P2.** Encourage advance notification and neighborhood meetings to provide an opportunity for early community review of new development proposals.
- **Policy 5.3.1-P10.** Provide opportunities for increased landscaping and trees in the community, including requirements for new development to provide street trees and a minimum 2:1 on- or off-site replacement for trees removed as part of the proposal to help increase the urban forest and minimize the heat island effect.
- **Policy 5.3.1-P11**. Allow new public/quasi-public uses under any General Plan Land Use classification, provided that the use is compatible with planned uses on neighboring properties, consistent with other applicable General Plan policies, and has primary access from a Collector or larger roadway. Such uses not associated with government operations are prohibited in areas designated as Light Industrial or Heavy Industrial, and in areas designated High or Low Intensity Office/Research and Development outside the Exception Area.
- **Policy 5.3.1-P15.** Require new developments and major public infrastructure projects to include adequate rights-of-way to accommodate all modes of transportation.
- **Policy 5.3.1-P17.** Promote economic vitality by maintaining the City's level of service for public facilities and infrastructure, including affordable utilities and high-quality telecommunications.
- **Policy 5.3.1-P28.** Encourage undergrounding of new utility lines and utility equipment throughout the City.

5.11.2. Environmental Impacts and Mitigation Measures

(a) Would the project physically divide an established community?

LESS THAN SIGNIFICANT - CONSTRUCTION. The new 115 kV transmission pole structures would primarily follow the edge of roadways, or would be within the median of the road, which includes landscaped planter areas, the perimeters of parking lots, or in sidewalks, where many of the existing power lines in the project vicinity are located. There are residential communities to the east and west of the proposed Project alignment. However, these communities are already physically divided by a main arterial road, Lafayette Street, and the railroad line, which is parallel to the road. The railroad is fenced or walled along part of the alignment to restrict access. The proposed Project would be constructed along Lafayette Street and parallel to the railroad line and would not be a physical barrier.

During construction work areas for pole installation would typically be within or edge of the road ROW and/or within SVP easements. The work areas would extend approximately 50 feet along the alignment for each individual pole location. The width of the Project encroachment into the public ROW and/or SVPs easement during pole installation and construction stringing will depend on the location of the pole in relation to the curb and private property lines, among other factors.

Construction of both Option 1 (all overhead) and Option 2 (partial underground) would require periodic, temporary lane closures along various public and private roads within the project area to create a safe workspace. Under Option 2, construction would occur over 14 months. Option 2 includes underground construction, which would require a longer construction period for the overall Project and more extensive

and longer duration temporary lane closures. The temporary lane closures would be coordinated with local agencies and SVP would obtain encroachment permits to conduct work in public ROWs in accordance with applicable City requirements.

Given the relatively short construction period and SVP's coordination with local agencies, there would be a less-than-significant impact to the local established community during construction of the proposed Project.

NO IMPACT – OPERATIONS AND MAINTENANCE. During operations and maintenance, most of the proposed Project, except for the poles, would be overhead or underground, and would not divide an established community, therefore, there would be no impact.

(b) Would the project cause a significant environmental impact due to a conflict with any land use plan, policy, or regulation adopted for the purpose of avoiding or mitigating an environmental effect?

NO IMPACT. The proposed Project would be consistent with the policies of the City General Plan, as listed above in Section 5.11.1, Setting. As discussed in Sections 5.1, Aesthetics, and 5.13, Noise, the project would have less than significant visual and noise impacts. SVP shall obtain all applicable ministerial permits prior to commencing project activities. The proposed Project does not cause an environmental impact due to a conflict with any applicable land use plans, policy, or regulation.

5.12. Mineral Resources

MINERAL RESOURCES Would the project:	Potentially Significant Impact	Less Than Significant With Mitigation Incorporated	Less Than Significant Impact	No Impact
(a) Result in the loss of availability of a known mineral resource that would be of value to the region and the residents of the State?	☐	☐	☐	☒
(b) Result in the loss of availability of a locally important mineral resource recovery site delineated on a local general plan, specific plan, or other land use plan?	☐	☐	☐	☒

Significance criteria established by CEQA Guidelines, Appendix G.

5.12.1. Setting

Mineral resources of significance found and extracted in Santa Clara County include construction aggregate deposits and salts derived from evaporation ponds at the edge of San Francisco Bay (City of Santa Clara, 2014). A review of California Department of Conservation (CDOC) and U.S. Geological Survey (USGS) data indicate that the proposed Project is in an area identified as MRZ-1, which is an area where there are no known significant mineral resources, and no active mining operations are located in the immediate vicinity of the proposed Project (CDOC, 1996 and 2024a; USGS, 2024). The USGS Mineral Resources Data System identifies one past gravel producer just to the west of the proposed Project (USGS, 2024). The site is currently identified as the CEMEX Concrete Plant located south of Montague Expressway (Google Earth, 2024).

Regulatory Background

This section includes a description of the regulatory framework for mineral resources. There are no federal or local regulations associated with mineral resources that are relevant to the proposed Project.

State

California Surface Mining and Reclamation Act of 1975 (SMARA). SMARA requires that the State Geologist classify land into Mineral Resource Zones (MRZs) according to the known or inferred mineral potential of the land. The California Department of Conservation's Office of Mine Reclamation (OMR) and the State Mining and Geology Board (SMGB) are jointly charged with administration of the Act's requirements. The OMR provides technical assistance to lead agencies and operators, maintains a statewide database of mine locations and operational information, and is responsible for matters involving SMARA compliance. The SMGB promulgates regulations to clarify and interpret SMARA requirements in addition to serving as a policy and appeals board (CDOC, 2024b). The SMGB has the authority to further regulate the authority of the local agencies if it finds that the agencies are not in compliance with the provisions of SMARA.

Mineral resources have been mapped using the California Mineral Land Classification System, which include the following four MRZs:

- **MRZ-1**: Areas where adequate information indicates that no significant mineral deposits are present, or where it is judged that little likelihood exists for their presence;
- **MRZ-2**: Areas where adequate information indicates that significant mineral deposits are present, or where it is judged that a high likelihood exists for their presence;
- **MRZ-3**: Areas containing mineral deposits, the significance of which cannot be evaluated; and
- **MRZ-4**: Areas where available information is inadequate for assignment to any other zone.

5.12.2. Environmental Impacts and Mitigation Measures

(a) Would the project result in the loss of availability of a known mineral resource that would be of value to the region and the residents of the State?

NO IMPACT. The proposed Project and the surrounding vicinity are not located within a classified Mineral Resource Zone and there are no known important mineral resources that would be impacted by the Project. Therefore, the Project would not result in the loss of availability of a known mineral resource of value to the region or State.

(b) Would the project result in the loss of availability of a locally important mineral resource recovery site delineated on a local general plan, specific plan, or other land use plan?

NO IMPACT. As stated above, there are no designated Mineral Resource Zones in the proposed Project vicinity and there are no known important mineral resources that would be impacted by the Project. Therefore, the Project would have no impact on any locally important mineral resource recovery sites.

5.13. Noise

NOISE Would the project result in:	Potentially Significant Impact	Less Than Significant With Mitigation Incorporated	Less Than Significant Impact	No Impact
(a) Generation of a substantial temporary or permanent increase in ambient noise levels in the vicinity of the project in excess of standards established in the local general plan or noise ordinance, or applicable standards of other agencies?	☐	☐	☒	☐
(b) Generation of excessive groundborne vibration or groundborne noise levels?	☐	☐	☒	☐
(c) For a project located within the vicinity of a private airstrip or an airport land use plan or, where such a plan has not been adopted, within two miles of a public airport or public use airport, would the project expose people residing or working in the project area to excessive noise levels?	☐	☐	☐	☒

Significance criteria established by CEQA Guidelines, Appendix G.

5.13.1. Setting

Existing Conditions

Community Noise. A measurement scale (A-weighted scale) that simulates human perception is used to describe environmental noise and to assess a project's impacts on areas that are sensitive to community noise. The A-weighted scale of frequency sensitivity accounts for the sensitivity of the human ear, which is less sensitive to low frequencies, and correlates well with human perceptions of the annoying aspects of noise. The A-weighted decibel scale (dBA) is cited in most noise criteria. Decibels are logarithmic units that can be used to conveniently compare wide ranges of sound intensities.

Community noise levels can be highly variable from day to day as well as between day and night. For simplicity, sound levels are usually best represented by an equivalent level over a given time period (Leq) or by an average level occurring over a 24-hour day-night period (Ldn). The Leq, or equivalent sound level, is a single value (in dBA) for any desired duration, which includes all of the time-varying sound energy in the measurement period, usually one hour. The L50, is the median noise level that is exceeded fifty per cent of the time during any measuring interval. The Ldn, or day-night average sound level, is equal to the 24 hour A-weighted equivalent sound level with a 10 decibel penalty applied to nighttime sounds occurring between 10:00 p.m. and 7:00 a.m. Community Noise Equivalent Level (CNEL) is another metric that is the average equivalent A-weighted sound level during a 24 hour day, obtained after addition of five decibels to sound levels in the evening from 7:00 p.m. to 10:00 p.m. and after addition of 10 decibels to sound levels in the night from 10:00 p.m. to 7:00 a.m. To easily estimate the day-night level caused by any noise source emitting steadily and continuously over 24 hours, the Ldn is 6.4 dBA higher than the source's Leq. For example, if the expected continuous noise level from equipment is 50.0 dBA Leq for every hour, the day-night noise level would be 56.4 dBA Ldn.

Community noise levels are usually closely related to the intensity of human activity. Noise levels are generally considered low when below 45 dBA, moderate in the 45 to 60 dBA range, and high above 60 dBA. In wilderness areas, the Ldn noise levels can be below 35 dBA. In small towns or wooded and lightly used residential areas, the Ldn is more likely to be around 50 or 60 dBA. Levels around 75 dBA are more common in busy urban areas, and levels up to 85 dBA occur near major freeways and airports. Although people often accept the higher levels associated with very noisy urban residential and residential-commercial zones, they nevertheless are considered to be adverse to public health.

Surrounding land uses dictate what noise levels would be considered acceptable or unacceptable. Lower levels are expected in rural or suburban areas than what would be expected for commercial or industrial

zones. Nighttime ambient levels in urban environments are about seven decibels lower than the corresponding daytime levels. In rural areas away from roads and other human activity, the day-to-night difference can be considerably less. Areas with full-time human occupation and residency are often considered incompatible with substantial nighttime noise because of the likelihood of disrupting sleep. Noise levels above 45 dBA at night can result in the onset of sleep interference. At 70 dBA, sleep interference effects become considerable (U.S. EPA, 1974).

Noise Environment in the Project Area. The Project area includes land uses that are residential, commercial, and industrial. The major arteries, such as Central Expressway and U.S. 101 near the Project, cause traffic noise levels that exceed 75 dBA CNEL along the edges of the roads, and noise levels that exceed 70 dBA CNEL at the Project alignment (City of Santa Clara, 2014; General Plan Figure 5.10 4). The Project is also within a 65 dB CNEL airport noise contour (City of Santa Clara, 2014; General Plan Figure 5.10 5).

Noise Sensitive Areas. Within 0.5 miles of the Project are a diverse range of general plan designations, including areas with medium density residential, low density residential, and community-serving parks/ open space. The only residences in the project vicinity are both east and west of Lafayette Street, primarily in the northern portion of the alignment, and just over 100 feet from the proposed transmission line route at their nearest. Project-related staging areas and work areas would be at least 100 feet from land uses containing sensitive receptors.

5.13.2. Regulatory Background

Regulating environmental noise is generally the responsibility of local governments. The U.S. EPA once published guidelines on recommended maximum noise levels to protect public health and welfare (U.S. EPA, 1974), and the State of California maintains recommendations for local jurisdictions in the General Plan Guidelines published by the Governor's Office of Planning and Research (OPR, 2017). The following summarizes the local requirements.

The City of Santa Clara City Code

The City Code generally prohibits "loud and unreasonable noise" as a nuisance if it may disturb the peace "between the hours of 10:00 P.M. and 7:00 A.M." including specifically noise that is "made within two hundred fifty (250) feet of any building or place regularly used for sleeping purposes" (Section 9.05.010).

The City's Noise Ordinance (Chapter 9.10) includes exterior noise limits that must not be exceeded at receiving land uses, for noise generated by any fixed source of noise. Construction activities that occur during allowed hours and noise from City-owned electric facilities are exempt from the noise and vibration standards of the Noise Ordinance (Section 9.10.070). For construction that is "off-street," which would include project staging areas and substations, and within 300 feet of a residentially zoned property, construction activities shall be limited to occur within the hours of 7:00 A.M. to 6:00 P.M. on weekdays that are not holidays or within the hours of 9:00 A.M. to 6:00 P.M. on Saturdays that are not holidays (Section 9.10.230).

City of Santa Clara General Plan

The Environmental Quality chapter of the General Plan (2014) includes policies to encourage land uses that are compatible with areas of higher noise levels and to protect noise sensitive land uses in areas where existing ambient noise levels are high, as follows:

- **Policy 5.10.6-P6,** Discourage noise sensitive uses, such as residences, hospitals, schools, libraries and rest homes, from areas with high noise levels, and discourage high noise generating uses from areas adjacent to sensitive uses.

- **Policy 5.10.6-P7,** Implement measures to reduce interior noise levels and restrict outdoor activities in areas subject to aircraft noise in order to make Office/Research and Development uses compatible with the Norman Y. Mineta International Airport land use restrictions.
- **Policy 5.10.6-P8,** Continue to encourage safe and compatible land uses within the Norman Y. Mineta International Airport Noise Restriction Area.

5.13.3. Environmental Impacts and Mitigation Measures

(a) Would the project result in generation of a substantial temporary or permanent increase in ambient noise levels in the vicinity of the project in excess of standards established in the local general plan or noise ordinance, or applicable standards of other agencies?

LESS THAN SIGNIFICANT – CONSTRUCTION. The proposed Project would require 14 -months of construction (for Option 1) that includes mobilizing construction equipment, crews, and materials, excavating holes for poles, installing concrete pier foundations, installing poles, and wire stringing. The construction activities would require use of vehicles and heavy-duty equipment capable of generating noise along the proposed transmission line, at the proposed staging and work areas, within the modified substation sites, and along the roadways used to access these locations. The types of construction equipment used at work sites would include trucks for linework, lifts, delivery, concrete, water and work crews, backhoes, loaders, drill rigs, cranes, and small welders, pumps and generators. Outside of work sites, increased traffic noise would be caused by vehicles transporting equipment and supplies to the sites, trucks removing debris, and workers commuting to and from work sites.

Construction would temporarily increase the noise levels within the project area. Noise would vary, as work would occur intermittently at various sites. The surrounding land uses are primarily residential and heavy and light industrial, as well as transportation (arterial and connector roads, railroad). The locations of the proposed transmission line would not be immediately adjacent to any sensitive receptors. However, the area includes a diverse range of general plan designations within 0.5 miles of the project, including areas with medium density residential, low density residential, and community-serving parks/open space. The closest residences in the project vicinity are east of Lafayette Street and approximately 100 feet from the proposed transmission line route. Most residences to the west are behind a high block wall. Project-related staging areas and work areas would be at least 100 feet from land uses containing sensitive receptors.

Construction activities along the project segments and at staging areas would create both intermittent and continuous noises. Intermittent noise would be caused by periodic, short-term equipment operation. For example, a drill rig would need to be used with a backhoe or loader to create foundations, and this would require one or two days of work at each pole site. Continuous noise would emanate from equipment operation over longer periods, such as steady generator or excavator use. The maximum intermittent noise levels from a construction work spread would typically range from 84 to 90 dBA at 50 feet. These would be the highest levels expected for foundation development or excavation activities. At 50 feet, continuous noise levels could range up to about 83 dBA. Because sound fades over distance, these levels would diminish over additional distance and could be reduced further by intervening structures. At 100 feet from a work spread, continuous noise levels could range up to 77 dBA and at 200 feet, up to 71 dBA.

Table 5.13-1 summarizes the typical noise levels for individual pieces of construction equipment.

Table 5.13-1. Typical Noise Levels for Individual Construction Equipment

Equipment	Typical Lmax (dBA, at 50 ft)	Typical Leq (dBA, at 50 ft)
Drill rig, auger	84	77
Crane	81	73
Backhoe	78	74
Excavator	81	77
Compactor	83	76
Dump truck, haul truck, concrete mixer truck	76-79	73-76
Pickup truck, crew truck	75	62-71

Source: FHWA, 2006.
Lmax: Maximum noise level from Actual Measured in Roadway Construction Noise Model.
Leq: Equivalent noise level for one hour incorporating the Acoustical Usage Factor.

Construction would also cause noise away from work areas, primarily from commuting workers and from trucks needed to bring materials to the sites. This would be similar to vehicle and truck traffic already present in the area. Haul trucks would make trips to bring poles, conductor line, and other materials to the construction sites and remove excavated soil and debris. The noise levels associated with passing trucks and commuting worker vehicles would be approximately 71 to 76 dBA at 50 feet, and would be concentrated along the major arterial streets and smaller streets and access roads leading to individual work areas.

Construction noise would affect the locations closest to the work and staging areas and along site access routes used by haul trucks and other construction traffic. The surrounding land uses would experience a temporary increase in noise above the conditions that exist without the Project. Construction noise would occur in a setting of industrial land uses and moderate ambient noise levels without the Project. However, the intermittent and variable nature of construction noise limits the potential for adverse effects such as annoyance to be experienced by off-site receptors, and sleep interference would not be a concern because residences in the project area are set back from the alignment and most construction activities would occur during daylight hours. Incremental noise from construction vehicles and traffic noise would not represent a substantial increase in the context of the project surroundings of industrial land uses and the existing noise levels.

SVP would take routine precautions to avoid creating unnecessary noise, especially near residential or other sensitive land uses. Construction traffic would be routed away from residential areas, when possible. The construction noise levels would be compatible with existing land uses and ambient noise levels and would pose no conflict with City policies regarding compatibility of land uses with noise levels. Project construction noise during daytime hours would be exempt from the standards established in City Noise Ordinance. The construction noise impact under this criterion would be less than significant.

LESS THAN SIGNIFICANT – OPERATIONS AND MAINTENANCE. City-owned electric facilities are exempt from the noise and vibration standards of the Noise Ordinance (Chapter 9.10.070). Upon completing construction, occasional maintenance of the Project would not result noise levels in excess of standards established in the local general plan or noise ordinance. Permanent increases in ambient noise levels in the project vicinity would not occur, and the transmission and distribution system improvements would not generate a new or different source of permanent noise. Operation and maintenance activities would be comparable to O&M of the SVP's existing facilities. Corona and audible noise from the corona effect typically becomes a design concern for transmission lines at 230 kV and higher and is less noticeable or inaudible on lines operated at lower voltages such as the proposed 115 kV transmission line. This impact would be less than significant.

(b) Would the project result in generation of excessive groundborne vibration or groundborne noise levels generation of excessive groundborne vibration or groundborne noise levels?

LESS THAN SIGNIFICANT. Groundborne vibration from construction equipment and activities might be perceptible to receptors in the immediate vicinity of work or staging areas. The activity that would be most likely to cause groundborne vibration would be the passing of heavy trucks on uneven surfaces. The impact from construction-related groundborne vibration would be short-term and confined to only the

immediate area around such activities (within about 25 feet). Pole locations and work sites, including the work within the existing substations, would be more than 25 feet from residences, so no homes would be exposed to excessive vibration, and the impact during construction would be less than significant.

Equipment associated with operation and maintenance of the Project would not produce any ground-borne noise or vibration; therefore, operation and maintenance of the project would result in no impact under this criterion.

(c) For a project located within the vicinity of a private airstrip or an airport land use plan or, where such a plan has not been adopted, within two miles of a public airport or public use airport, would the project expose people residing or working in the project area to excessive noise levels?

NO IMPACT. The proposed Project would be located adjacent to Levi Stadium and Lafayette Street and would cross Highway 101 and the Montague Expressway. The proposed Project would be unstaffed and would not create inhabited structures or workspaces. Therefore, the Project would not expose people to noise from the airport. Similarly, no excessive noise would result from Project operations that could impact people residing or working near the airport. There are no private airstrips located within two miles of the project, therefore the project would have no impact under this criterion. As such, the proposed Project would not expose people to excessive noise from aircraft, and there would be no impact.

5.14. Population and Housing

POPULATION AND HOUSING Would the project:	Potentially Significant Impact	Less Than Significant With Mitigation Incorporated	Less Than Significant Impact	No Impact
(a) Induce substantial unplanned population growth in an area, either directly (for example, by proposing new homes and businesses) or indirectly (for example, through extension of roads or other infrastructure)?	☐	☐	☒	☐
(b) Displace substantial numbers of existing people or housing, necessitating the construction of replacement housing elsewhere?	☐	☐	☐	☒

Significance criteria established by CEQA Guidelines, Appendix G.

5.14.1. Setting

The northern approximately 0.74 mile of the proposed Project is adjacent to areas zoned for residential uses of varying densities. The remainder of the proposed Project is adjacent to areas zoned for offices, businesses, and industrial uses (City of Santa Clara 2023).

Overall, this area of the City is substantially built out. Substantial increases in population can be achieved only by development of higher density housing, either on vacant land or through redevelopment of existing land uses.

Table 5.14-1 provides existing conditions for population housing, and employment for the City and the County of Santa Clara.

Table 5.14-1. Year 2017 Existing Conditions – Population, Housing, and Employment: City of Santa Clara and County of Santa Clara

		Housing Units		Employment	
Location	**Population**	**Total Units**	**Vacancy Rate**	**Total Employed***	**Unemployment Rate**
City of Santa Clara	132,476	53,370	6.4%	70,400	3.3%
County Santa Clara	1,886,079	701,539	5.0%	1,002,600	3.5%

*Accounts for population greater than 16 years of age and in Labor Force.
Source: CA DOF, 2023; CA EDD, 2023

Regulatory Background

This section includes a description of the population and housing regulatory framework. There are no federal or state regulations, plans, and standards for population and housing that apply to the proposed project.

City of Santa Clara General Plan

The purpose of the City's housing policies is to plan for an adequate variety of safe, appropriate, and well-built housing for all residents of Santa Clara (City of Santa Clara, 2014b). The following policies from the City General Plan and the Housing Element of the General Plan, respectively, generally relate to the proposed project (City of Santa Clara, 2014a; City of Santa Clara, 2014b):

- **Policy 5.3.1-P5.** Implement a range of development densities and intensities within General Plan land use classification requirements to provide diversity, use land efficiently and meet population and employment growth.
- **Policy D-4:** Encourage early participation from residents and other stakeholders in development of long-range plans and review of new development proposals.

5.14.2. Environmental Impacts and Mitigation Measures

(a) Would the project induce substantial unplanned population growth in an area, either directly (for example, by proposing new homes and businesses) or indirectly (for example, through extension of roads or other infrastructure)?

LESS THAN SIGNIFICANT. The proposed project is in a substantially developed urban area. There would be no direct population growth induced by the Project, as it would not provide new housing and would not require an expansion of the SVP workforce to service and maintain the new transmission facilities. During the 14-month construction period (for Option 1), the proposed Project would provide short-term jobs for a small workforce. Construction needs are not anticipated to result in workers relocating to the area. The proposed Project would therefore generate neither a permanent increase in population levels nor a decrease in available housing.

The construction and operation of the new 115 kV transmission line and reconfiguring of the electric load would facilitate future planned growth by ensuring reliable electricity to the area and would therefore result in an indirect effect of facilitating the development of the surrounding area of the City of Santa Clara. Greater electrical reliability would provide developmental and employment opportunities to the regional workforce. While the further development of this area of the City may induce some population growth, this has already been accounted for through the City's General Plan. Therefore, there would be a less than significant effect as a result of the proposed Project.

(b) Would the project displace substantial numbers of existing people or housing, necessitating the construction of replacement housing elsewhere?

NO IMPACT. The proposed Project would not be expected to result in an increase in population within the area. Construction of the new 115 kV transmission line would occur over approximately 14-months (for Option 1) and would not require the relocation of workers to the proposed Project area in the City. The proposed Project would not displace any housing or people, and therefore would not necessitate the construction of replacement housing. Therefore, no impacts would occur.

5.15. Public Services

PUBLIC SERVICES **Would the project** result in substantial adverse physical impacts associated with the provision of new or physically altered governmental facilities, need for new or physically altered governmental facilities, the construction of which could cause significant environmental impacts, in order to maintain acceptable service ratios, response times, or other performance objectives for any of the public services:	Potentially Significant Impact	Less Than Significant With Mitigation Incorporated	Less Than Significant Impact	No Impact
(a) Fire protection?	☐	☐	☒	☐
(b) Police protection?	☐	☐	☒	☐
(c) Schools?	☐	☐	☐	☒
(d) Parks?	☐	☐	☐	☒
(e) Other public facilities?	☐	☐	☐	☒

Significance criteria established by CEQA Guidelines, Appendix G.

5.15.1. Setting

For the area where the proposed Project would be located, public services, including fire and police services, as well as schools, parks and recreational areas, and other public services, are provided by the City of Santa Clara, special districts, and private entities.

5.15.1.1. Fire Protection

The Santa Clara Fire Department (SCFD) serves the City and provides fire protection and emergency services to the project site and the surrounding area (City of Santa Clara, 2014a). There are 10 fire stations throughout the City and each fire station has at least one 3-person engine or ladder-truck company (City of Santa Clara, 2014a). The nearest fire stations to the proposed Project route are Fire Station 8 at 2400 Agnew Road, about 0.6 miles west of Lafayette Street, Fire Station 6 at 888 Agnew Road, about 0.5 miles west of Lafayette Street, and Fire Station 2 at 1900 Walsh Avenue about 0.8 mile from Kifer Receiving Station (KRS), which is the southernmost part of the proposed Project route (City of Santa Clara, 2024c). The average response time is 3 minutes for all areas of the City (City of Santa Clara, 2014a).

5.15.1.2. Police Protection

The Santa Clara Police Department (SCPD) serves the City and provides police protection to the project site and the surrounding area (City of Santa Clara, 2014a). The police station at 3992 Rivermark Parkway is approximately 0.7 miles east of Lafayette Street. SCPD headquarters is located at 601 El Camino Real, about 1.7 miles from Kifer Receiving Station, which is the southernmost part of the proposed Project route. SCPD has 232 full-time employees, including 153 sworn officers and 79 civilians. The average response time from dispatch to first officer arrival is 2 minutes and 35 seconds (City of Santa Clara, 2024d).

5.15.1.3. Schools and Daycare

Six school districts serve the City: Santa Clara Unified School District, San José Unified School District, Cupertino Union School District, Fremont Union High School District, Campbell Union School District, and Campbell Union High School District. The Santa Clara Unified School District is the only school district that operates schools within the City (City of Santa Clara, 2014a). Numerous daycare facilities operate in the

City, often in private homes. Educational institutions and known daycare facilities within 0.25-miles of the proposed Project include:

- Kathryn Hughes Elementary School, 4949 Calle De Escuela
- North Valley Baptist Schools; 941 Clyde Ave
- Montague District Preschool, 750 Laurie Ave
- Anna's Daycare, 4639 Snead Dr
- Care A Lot Family Daycare, 2056 Fairway Glen Dr
- Marvelous Kids Daycare, 4646 Armour Dr
- Hackett Daycare, 4493 Cheeney St
- Patty's Loving Care, 2347 Remo Ct
- iGurukul Learning Center, 2067 Agnew Rd
- Little Dolphin Family Daycare, 2376 Silveria Ct
- Matangi Family Daycare, 901 Clyde Ave
- Santa Clara Joy Family Day Care, 849 Leith Ave
- Agape Playskool, 3700 Thomas Rd
- Little Glitters Daycare, 1038 Leith Ave
- Kool School Daycare, 983 Laurie Ave
- Martinson Child Development, 1350 Hope Dr
- Hughes Preschool, 4949 Calle De Escuela
- Mater Ecclesiae Academy, 968 Leith Ave

5.15.1.4. Parks

There are 40 parks in the City (City of Santa Clara 2024a). The parks nearest to the proposed Project are Lick Mill Park, a small part of which fronts on Lafayette Street near the Northern Receiving Station, and the Agnews Historic Park, located directly adjacent to the proposed Project at 4030 Lafayette Street (City of Santa Clara, 2024b). See Section 5.16, Recreation for a list of parks in the vicinity of the proposed Project.

5.15.1.5. Hospitals

The hospitals closest to the proposed Project are:

- O'Connor Hospital, 2105 Forest Avenue, San Jose, 3.4 miles south of KRS
- Valley Health Center Sunnyvale, 660 S Fair Oaks Avenue, Sunnyvale, 4 miles west of KRS
- Kaiser Permanente Santa Clara Medical Center, 700 Lawrence Expressway, 3.8 miles southwest of KRS

The City's 2010-2035 General Plan Integrated Final EIR identified seven roads as key routes in the City for emergency vehicles. Out of the seven routes only one, Montague Expressway, would be crossed by the proposed Project (City of Santa Clara 2011).

Regulatory Background

This section includes a description of the public services regulatory framework. There are no federal regulations associated with public services that are relevant to the proposed project.

State

2010 Strategic Fire Plan for California. The 2010 Strategic Fire Plan for California was developed in coordination with the State Board of Forestry and Fire Protection and CAL FIRE to reduce and prevent the impacts of fire in California. Goal 6 of the Plan sets objectives to determine the level of suppression resources (staffing and equipment) needed to protect private and public state resources. Specific objectives include, but are not limited to, maintaining an initial attack policy which prioritizes life, property, and natural

resources; determining suppression resources allocation criteria; analyzing appropriate staffing levels and equipment needs in relation to the current and future conditions; increasing the number of CAL FIRE crews for fighting wildfires and other emergency response activities; maintaining cooperative agreements with local, state, and federal partners; and implementing new technologies to improve firefighter safety, where available (State Board of Forestry and Fire Protection). The standards outlined are applicable to the fire protection agency serving the City.

Local

City of Santa Clara General Plan. The purpose of the City's public services policies is to maintain the safety and security that is essential and integral to the quality of life in the City's community. The following policy in the General Plan generally relate to the proposed project (City of Santa Clara, 2014):

- **Policy 5.9.3-P1**. Encourage design techniques that promote public and property safety in new development and public spaces.

5.15.2. Environmental Impacts and Mitigation Measures

Would the project result in substantial adverse physical impacts associated with the provision of new or physically altered governmental facilities, need for new or physically altered governmental facilities, the construction of which could cause significant environmental impacts, in order to maintain acceptable service ratios, response times, or other performance objectives for any of the public services:

(a) Fire protection?

LESS THAN SIGNIFICANT. The construction of the new 115 kV transmission line would result in fire risk that would be comparable to that of the transmission line that is being replaced and other existing electrical infrastructure in the area. The proposed Project area would continue to be adequately supported by the existing fire protection services since the construction and operation of the proposed Project would not induce growth in the project area and the fire risk from the proposed Project would not create the need for new or physically altered fire protection facilities. In addition, operation and maintenance would not affect the ability of fire personnel to respond to fires. Only one emergency access route, Montague Expressway, would be crossed by the proposed Project. No construction-related activities would be located on streets identified as major emergency access routes. Therefore, the proposed Project is not expected to significantly interfere with emergency response. Impacts on local or regional fire protection would be less than significant.

(b) Police Protection?

LESS THAN SIGNIFICANT. The proposed Project would not require police services during construction or operation and maintenance beyond routine patrols and response. As with fire services discussed in Item (a) above, the construction and operation of the proposed project would not induce growth in the project area, would not result in a need for additional police facilities or affect response times or other service performance. Only one emergency access route, Montague Expressway, would be crossed by the proposed Project. No construction-related activities would be located on streets identified as major emergency access routes. Therefore, the proposed Project is not expected to significantly interfere with emergency response. The result would be a less than significant impact.

(c) Schools?

NO IMPACT. The proposed Project would not be expected to result in an increase in population within the area. Construction of the new 115 kV transmission line would occur over approximately 14 months and would not require the relocation of workers' families to the City of Santa Clara. There would not be an expected increase in families or in school-age children as a result of the temporary construction activities and any workers who might temporarily migrate to the area. After construction, SVP's existing maintenance

and operations group would assume inspection, patrol, and maintenance duties as needed; therefore, no additional staff would be required after project construction work is completed. The proposed Project would result in no impact related to requiring expanded schools.

(d) Parks?

NO IMPACT. The proposed Project would not increase the region's population. Construction of the new 115 kV transmission line would take place over 14 months (for Option 1) and would require only a small workforce of construction personnel working on any given day. While it is possible that workers traveling to the area may use existing public services or amenities such as parks, the potential increase in use and demand would be minimal and temporary and would not contribute substantially to the physical deterioration of existing facilities. Consequently, the Project would not increase any long-term demands on existing parks in the project area, and no new or expanded park facilities would be required because of the proposed Project.

(e) Other Public Facilities?

NO IMPACT. The proposed Project would not increase population and would not affect other governmental services or public facilities that would lead to the requirement of new or expanded facilities to be developed. Therefore, no impact on other public facilities is expected.

5.16. Recreation

RECREATION	Potentially Significant Impact	Less Than Significant With Mitigation Incorporated	Less Than Significant Impact	No Impact
(a) Would the project increase the use of existing neighborhood and regional parks or other recreational facilities such that substantial physical deterioration of the facility would occur or be accelerated?	☐	☐	☐	☒
(b) Does the project include recreational facilities or require the construction or expansion of recreational facilities, which might have an adverse physical effect on the environment?	☐	☐	☐	☒

Significance criteria established by CEQA Guidelines, Appendix G.

5.16.1. Setting

There are 40 parks in the City of Santa Clara (City of Santa Clara, 2024a). In general, each 1-square mile of residential area in the City contains a neighborhood or community park located close to the center to ensure that almost all residents live within a 10-minute walk of a park (City of Santa Clara, 2014a).

The two parks nearest to the proposed Project are Lick Mill Park, a small part of which fronts on Lafayette Street near the Northern Receiving Station, and the Agnews Historic Park, located at 4030 Lafayette Street (City of Santa Clara, 2024a). The portion of Lick Mill Park at Lafayette Street is a 75-foot-wide greenway that extends east 0.3 miles along Fairway Glen Drive to the main park facilities. The Agnews Historic Park is 14.5 acres and is located on a Historic Easement on the Oracle Santa Clara campus property, which was the site of the former Agnews State Hospital. The park includes four historic buildings which are preserved as part of the historic easement (City of Santa Clara, 2024b).

There are several parks within 0.5 miles of the proposed Project, including: Agnew Park (approximately 0.22 mile west); Fuller Street Park (approximately 0.2 mile west); Santa Clara Youth Soccer Park (approximately 0.2 mile northwest); Fairway Glen Park (approximately 0.18 mile northeast); Lick Mill Park (approximately 0.3 mile east); and Montague Park (approximately 0.38 mile east). The Ulistac Natural Area is located approximately 0.5 mile east of the proposed Project and consists of 40 acres of open space with no facilities. All these parks, except the greenway strip from Lick Mill Park and Agnews Historic Park, fronting on Lafayette Street, are separated from the proposed Project development. Other recreational facilities in the City include sports fields, a skate park, swimming pools/centers, senior center and youth center (City of Santa Clara, 2024a), but none of these area in the vicinity of the proposed project.

Regulatory Background

This section includes a description of the recreation regulatory framework. There are no federal or State regulations associated with recreation that are relevant to the proposed project.

City of Santa Clara General Plan. The objective of the City's public facilities and services policies is to maintain a high quality of life and livability in the City. The following policies in the General Plan generally relate to the proposed project (City of Santa Clara, 2014a):

- **Policy 5.3.5-P3.** Encourage industrial development to participate in the identification and funding of 25 acres for park and recreational facilities to serve employment centers north of the Caltrain railroad tracks.
- **Policy 5.9.1-P16.** Encourage non-residential development to contribute toward new park facilities to serve the needs of their employees.

5.16.2. Environmental Impacts and Mitigation Measures

(a) Would the project increase the use of existing neighborhood and regional parks or other recreational facilities such that substantial physical deterioration of the facility would occur or be accelerated?

NO IMPACT. The Project does not include development of new residential areas or commercial facilities that would increase population and, therefore, would not increase the demand for parks in the Project area. Construction of the new 115 kV transmission line would take place over approximately 14 months (for Option 1) and would require only a small workforce working on any given day. While some workers may use nearby park facilities during Project construction, increased use would be minimal and temporary and would not contribute substantially to the physical deterioration of existing facilities. Therefore, there would be no impact.

(b) Does the project include recreational facilities or require the construction or expansion of recreational facilities, which might have an adverse physical effect on the environment?

NO IMPACT. The proposed Project does not include recreational facilities, nor does it require the construction of new or expanded parks or recreational facilities that could create an adverse physical effect on the environment. There would be no impact.

5.17. Transportation

TRANSPORTATION Would the project:	Potentially Significant Impact	Less Than Significant With Mitigation Incorporated	Less Than Significant Impact	No Impact
(a) Conflict with a program plan, ordinance or policy addressing the circulation system, including transit, roadway, bicycle and pedestrian facilities?	☐	☒	☐	☐
(b) Conflict or be inconsistent with CEQA Guidelines §15064.3, subdivision (b)?	☐	☐	☒	☐
(c) Substantially increase hazards due to a geometric design feature (e.g., sharp curves or dangerous intersections) or incompatible uses (e.g., farm equipment)?	☐	☒	☐	☐
(d) Result in inadequate emergency access?	☐	☒	☐	☐

Significance criteria established by CEQA Guidelines, Appendix G.

5.17.1. Setting

The proposed Project would use local roadways for accessing work areas during construction. Roadways along the proposed Project route may be temporarily disrupted during installation of the new transmission line. Baseline conditions of regional and local roadways likely used to access the proposed Project area and work locations and those temporarily affected by proposed Project construction activities are discussed below.

5.17.1.1. Highways

The following highways provide regional access to the proposed Project area and staging areas in the City (City of Santa Clara, 2014):

- **U.S. Highway (U.S.) 101**, specifically the section of U.S. 101 known as Bayshore Freeway, is an 8-lane divided (4 lanes per direction) south-north highway that travels the length of the West Coast. The San Tomas Expressway exit or the De La Cruz Boulevard/Trimble Road exit from U.S 101 would likely be used to access the Project area. At the San Tomas Expressway exit, the year 2016 average daily traffic (ADT) volumes on U.S. 101 were 193,000 vehicles per day. At the De La Cruz Boulevard/Trimble Road exit, the year 2016 ADT volumes on U.S. 101 were 183,000 vehicles per day (Caltrans, 2020). Year 2016 ADT volumes represent the most recently published data.
- **State Route (SR) 237**, or Southbay Freeway, is a 6-lane- divided west-east highway that connects Interstate (I)-880 and I680 with U.S. 101 and SR 85 and extends northeast through the city. The Great America Parkway exit would likely be- used to access the Project area. At this exit, year 2016 ADT volumes on SR 237 were 124,000 vehicles per day (Caltrans, 2020).
- **Interstate 280**, or Junipero Serra Freeway, is a 10-lane south-north regional highway that connects I880 and SR1 and extends through the City. The exit at the junction of I280 with SR 17 and I880 would likely be the used to access the Project area. At this exit, year 2016 ADT volumes on I280 were 205,000 vehicles per day (Caltrans, 2020).

5.17.1.2. Local Roads

CEQA now analyzes project impacts in terms of vehicle miles traveled (VMT) to better understand such parameters as air quality impacts, fuel consumption, and commute times. The VMT approach is reasonable for projects that will generate traffic to and from the project site over time, such as offices, apartments, factories, and shopping centers. However, for projects that have a temporary traffic impact related to construction, after which traffic generation is minimal or non-existent, the primary concern is with the

project's impact on congestion during construction. To understand congestion and traffic delays, roadway and intersection operating conditions and the adequacy of existing roadway systems to accommodate traffic can be described in terms of level of service (LOS) ratings. LOS is expressed as A through F, with LOS A as the best operating conditions (characterized by free-flow traffic, low volumes, and little or no restrictions on maneuverability) and LOS F being the worst operating conditions (stop-and-go traffic flow with high traffic densities and slow travel speeds). The analysis in this section considers LOS impacts.

Access Routes

Table 5.17-1 provides information on some primarily local travel routes that would likely be used by project-related vehicles to access the construction staging yards and the proposed Project alignment. Details on access routes that would also be disrupted by project construction are discussed below under "Roadways Disrupted by Project Construction" and are not repeated in Table 5.17-1. While the average daily traffic provided in Table 5.17-1 are from 2011, it remains the most currently available ADT volume data for these roadways.

Table 5.17-1. Existing Local Roadway Conditions

Street	Lanes	ADT Volume	LOS
Montague Expressway (between De La Cruz Boulevard and Lafayette Street)	8	60,570	D
Montague Expressway (between Lafayette Street and Mission College Boulevard)	8	58,070	D
Central Expressway (Lafayette Street and De La Cruz Boulevard)	8	59,700	D
Central Expressway (between Scott Boulevard and Lafayette Street)	8	47,550	D
Agnew Road (between Lafayette Street and Montague Expressway)	4	14,820	D
Lafayette Street (between Tasman Drive and Montague Expressway)	4	18,370	D
Lafayette Street (between Montague Expressway and US 101)	4	11,600	C
Lafayette Street (between US 101 and Central Expressway)	4	18,190	D

LOS = level of service
Source: City of Santa Clara, 2011.

Roadways Disrupted by Project Construction

Construction of the proposed Project could result in a temporary disruption to local roadways during delivery of large equipment or materials and during installation of poles and conductors along the transmission line alignment on Lafayette Street. The main roads that may require temporary lane closures and/or escort vehicles to facilitate material and equipment deliveries include Lafayette Street, Agnew Road, Montague Expressway, and Central Expressway, a combination of which could be used to access the smaller local roads which may be used to access the transmission route and the substations.

5.17.1.3. Mass Transit

Bus

Existing public transit service within the City is primarily provided by Santa Clara Valley Transportation Authority (VTA) and consists of bus, light rail transit, and paratransit services. VTA bus route 20 crosses the proposed Project at Agnew Road (VTA, 2021). Route 10 travels along Agnew Road in the central part of the proposed transmission line route (VTA, 2021).

Passenger Rail

Existing commuter rail lines include Caltrain, operated by the Peninsula Joint Powers Board (JPB), and Altamont Commuter Express (ACE), operated by the San Joaquin Regional Rail Commission. Both stop at the Santa Clara Transit Center, approximately 2 miles south of Kifer Receiving Station. The Capitol Corridor

commuter rail line, operated by the Capitol Corridor Joint Powers Authority (CCJPA), stops at the Great America Station approximately 0.4 miles northwest of the Northern Receiving Station and provides transit services between Sacramento and San Jose. Planned transit developments in the City include a possible extension of Bay Area Rapid Transit (BART) to the Santa Clara Transit Center, High Speed Rail along the Caltrain corridor, and the Agnew Siding Project along the Capital Corridor. (City of Santa Clara, 2011 and 2014)

5.17.1.4. Rail (Freight)

Outside peak commuter rail periods, the Union Pacific Railroad (UPRR) provides freight operations within the Caltrain right-of-way (ROW). The Caltrain ROW traverses through the middle and downtown areas of the City. The rail network includes grade-separated and at-grade railroad crossings. The network includes the potential for additional crossings to accommodate a future high-speed rail. (City of Santa Clara, 2014)

5.17.1.5. Bicycle

Existing bicycle facilities are part of City Bicycle and Trail Network, providing connections between residential neighborhoods, employment, recreation, education, and transit centers within the City (City of Santa Clara, 2014). Bikeways are typically classified as Class I, II, or III facilities. Bike paths or trails (also known as Class I bikeways) operate within a right-of-way separated from vehicular traffic. Bike lanes (also known as Class II bikeways) are located within roadways but are delineated by warning symbols and striping. Bike routes (also known as Class III bikeways) operate in the shoulder lane of roadways but are not delineated by striping. One Class II bikeway is located along De La Cruz Boulevard on the section of the Boulevard north of the proposed Project route (City of Santa Clara, 2013).

5.17.1.6. Air Transportation

The Norman Y. Mineta San Jose International Airport (Airport) is southeast of the Kifer Receiving Station in San Jose, adjacent to the City.

Regulatory Background

Federal

14 CFR Part 77 – Safe, Efficient Use, and Preservation of the Navigable Airspace. Construction of a project could potentially impact aviation activities if a structure or equipment were positioned such that it would be a hazard to navigable airspace. The Federal Aviation Administration (FAA) has established reporting requirements if any construction includes equipment or structures more than 200 feet above ground level or results in an object penetrating an imaginary surface extending outward and upward at a ratio of 100 to 1 from a public or military airport runway out to a horizontal distance of 20,000 feet (approximately 3.78 miles) (FAA, 2016). For areas around heliports, this same requirement applies to any construction that is more than 200 feet above ground level or would penetrate an imaginary surface extending outward and upward at a ratio 25 to 1 from a public or military heliport out to a horizontal distance of 5,000 feet.

State

California Vehicle Code (CVC). The CVC includes regulations pertaining to licensing, size, weight, and load of vehicles operated on highways; safe operation of vehicles; and the transportation of hazardous materials.

Local

City of Santa Clara General Plan. The objectives of the City's mobility and transportation policies are to a safe, efficient, convenient, and integrated system to move people and goods and promote a reduction in the use of personal vehicles and vehicle miles traveled. The following policies in the General Plan generally relate to the proposed Project (City of Santa Clara, 2014):

- **Policy 5.8.2-P3.** Encourage undergrounding of utilities and utility equipment within the public right-of-way and site these facilities to provide opportunities for street trees and adequate sidewalks.
- **Policy 5.8.5-P1.** Require new development and City employees to implement transportation demand management programs that can include site-design measures, including preferred carpool and vanpool parking, enhanced pedestrian access, bicycle storage and recreational facilities.
- **Policy 5.8.5-P4.** Encourage new development to participate in shuttle programs to access local transit services within the City, including buses, light rail, Bay Area Rapid Transit, Caltrain, Altamont Commuter Express Yellow Shuttle, and Lawrence Caltrain Bowers/Walsh Shuttle services.

5.17.2. Environmental Impacts and Mitigation Measures

(a) Would the project conflict with a program plan, ordinance or policy addressing the circulation system, including transit, roadway, bicycle, and pedestrian facilities?

LESS THAN SIGNIFICANT WITH MITIGATION – CONSTRUCTION. Project construction would occur in a highly urbanized setting and would therefore create impacts to public, private, and pedestrian transit in the project area. Some road closures and/or one-way traffic controls would be required to allow for certain construction activities and to maintain public safety. These closures and controls would decrease traffic flow and parking availability in the project area, particularly on Lafayette Street. The ROW width that would be required for the transmission line would vary depending on the location, but in general, is approximately 50 feet. SVP would obtain encroachment permits to conduct work in public and railroad ROWs in accordance with applicable City and UPRR requirements. Many of the existing power lines in the Project vicinity are located along the edges of the roadway, such as in landscaped planter areas, the perimeters of parking lots, or along sidewalks. From NRS to Palm Substation at Agnew Road, the new transmission line would be either underground or on poles in the median of Lafayette Street. South of Palm Substation, the lines would be overhead on poles along the east side of Lafayette Street to Montague Expressway, where the line would cross to the west side of Bassett Street. The lines would be mainly located at the west edge of the roadway and continue to Kifer Receiving Station (See Figure 4-1) and be installed in the same general locations as the existing power lines.

While construction would create impacts, these impacts would be localized, temporary in nature, and would not change long-term traffic loads or patterns. Mitigation Measure T1 is proposed to provide specificity regarding the requirements of a construction Traffic Control Plan. The purpose of this plan would be to reduce potential impacts to the circulation system from the closure/disruption to roadways and travel lanes. With the incorporation of this mitigation, construction would not conflict with programs, policies, plans, or ordinances regarding public roadway, transit, bicycle, or pedestrian facilities, or otherwise decrease the performance or safety of such facilities.

NO IMPACT – OPERATIONS AND MAINTENANCE. SVP's existing maintenance and operations group would assume inspection, patrol, and maintenance duties as needed. Typical maintenance activities involve both routine inspections and preventive maintenance to ensure service reliability, as well as emergency work to maintain or restore service continuity. No additional staff would be required after Project construction work is completed. No substantial increase in traffic or traffic-related impacts would occur due to operation and maintenance activities.

Mitigation Measures for Transportation Impacts

MM T-1 **Construction Traffic Control Plan.** Prior to the start of construction, SVP or its designee shall prepare and submit an Encroachment Permit which will include the construction Traffic Control Plan for review and approval to the City's Department of Public Works for public roads and transportation facilities that would be directly affected by the construction activities and/or would require permits and approvals. SVP shall submit the construction Traffic Control Plan to the City prior to conducting activities covered in the traffic control permits. The Construction Traffic Control Plan shall include, but not be limited to:

- The locations and use of flaggers, warning signs, lights, barricades, delineators, cones, arrow boards, etc., according to standard guidelines outlined in the Manual on Uniform Traffic Control Devices, the Standard Specifications for Public Works Construction, and/or the California Joint Utility Traffic Control Manual.
- Additional methods to reduce temporary traffic delays and trips during peak travel hours to the extent feasible.
- Typical access routes between all staging areas and the proposed work areas.
- Defining methods to coordinate with the City throughout construction to minimize cumulative lane disruption impacts should simultaneous construction projects affect shared segments/portions of the circulation system.
- Prior to the start of construction, provide (or identify the timing to provide) the City with methods to comply with all specified requirements.
- Plans to coordinate in advance with emergency service providers to avoid restricting the movements of emergency vehicles. Police departments and fire departments shall be notified in advance by SVP of the proposed locations, nature, timing, and duration of any roadway disruptions, and shall be advised of any access restrictions that could impact their effectiveness. At locations where roads will be blocked, provisions shall be ready at all times to accommodate emergency vehicles, such as immediately stopping work for emergency vehicle passage, providing short detours, and developing alternate routes in conjunction with the public agencies. Documentation of the coordination with police and fire departments shall be gathered prior to the start of construction.
- Plans to coordinate in advance with property owners, if any, that may have limited access to properties due to temporary lane closures. Provisions for ensuring secondary access should be provided.
- Plans to coordinate with Valley Transportation Authority in advance of construction to minimize disruption to mass transit.

(b) Would the project conflict or be inconsistent with CEQA Guidelines section 15064.3, subdivision (b)?

LESS THAN SIGNIFICANT – CONSTRUCTION. CEQA Guidelines section 15064.3(b) concerns vehicle miles travelled (VMT) as the measure of transportation impacts. Prior to July 1, 2020, use of the provisions of section 15064.3(b) was at the discretion of the CEQA lead agency but are now mandatory statewide. As discussed in CEQA Guidelines Section 15064.3(b)(3), a qualitative analysis of construction traffic vehicle miles travelled (VMT) may be appropriate.

Construction of the proposed Project would occur over approximately 14 months (for Option 1) and proposed Project–related traffic would be limited to worker commutes and the transport of supplies and equipment to and from construction areas and material supply sources. Once the Project is completed, the vehicle trips associated with construction would end. The total peak number of vehicle trips is

estimated to be up to 30 roundtrips daily. Construction personnel would commute to the staging yards and work sites at the beginning of the day and leave at the end of the day, and few people would travel to and from work areas throughout the middle of the day.

Vehicle miles traveled by personal vehicle trips and truck trips during construction would vary in their origins and destinations, but they are assumed to come primarily from the local or Bay Area and they would be periodic and temporary. At this time, no known applicable VMT thresholds of significance for temporary construction trips that may indicate a significant impact is known. Therefore, while the proposed Project would include temporary construction trips with some that may include higher VMT to deliver specialized materials and equipment, they would be short-term and the Project would not affect existing transit uses or corridors and is presumed to cause a less than significant transportation impact under State CEQA Guidelines section 15064.3(b).

LESS THAN SIGNIFICANT – OPERATIONS AND MAINTENANCE. Maintenance of the proposed Project would require routine inspection and periodic maintenance visits by existing SVP personnel. These activities would generate a negligible number of new vehicle trips with no notable growth in VMT. The transportation impact under State CEQA Guidelines section 15064.3(b) would be less than significant.

(c) Would the project substantially increase hazards due to a geometric design feature (e.g., sharp curves or dangerous intersections) or incompatible uses (e.g., farm equipment)?

LESS THAN SIGNIFICANT WITH MITIGATION – CONSTRUCTION. Heavy equipment operating adjacent to or within a road right-of-way could increase the risk of accidents. Construction of the proposed Project would involve activities within and adjacent to public roadways, requiring temporary lane narrowing and, in some instances, temporary lane or roadway closures. Construction-generated truck traffic on the affected city streets would interact with other vehicles, and potentially create hazards. Potential conflicts also could occur between construction traffic and bicyclists and pedestrians, and potential short-term hazards could be associated with temporary lane closures during construction. Construction traffic–related impacts would be reduced with implementation of Mitigation Measure T-1 (Construction Traffic Control Plan) to ensure temporary lane closures and construction activities do not result in increased hazards to the traffic circulation system.

Mitigation Measure T1 requires the Project applicant to obtain and adhere to all requirements of an Encroachment Permit from the City, and to prepare a Traffic Control Plan that provides for the safe and efficient movement of emergency vehicles, bicycles, pedestrians, and transit vehicles through or around construction zones while protecting the workers, equipment, and construction areas. While there may be a limited increase in hazards due to construction activities proximate to public roadways, construction would be temporary and with the incorporation of Mitigation Measure T1, temporary impacts during construction would be less than significant.

LESS THAN SIGNIFICANT – OPERATIONS AND MAINTENANCE. The height and form of the proposed Project structures would be similar to the existing 115 kV transmission structures located adjacent to roadways throughout the City and they are not expected to increase transportation hazards or be an incompatible use. Maintenance of the proposed Project would require routine inspection and periodic maintenance visits. While temporary lane closures are not anticipated, occasionally maintenance vehicles or equipment may be temporarily present alongside the roadways depending on structure locations; however, at least one lane of travel would remain open at all times. Therefore, the Project would not cause hazards or incompatible uses due to maintenance activities proximate to public roadways; no mitigation is required.

Mitigation Measures for Transportation Hazards

MM T-1 Construction Traffic Control Plan. [see full text under Item (a) above]

(d) Would the project result in inadequate emergency access?

LESS THAN SIGNIFICANT WITH MITIGATION – CONSTRUCTION. Construction of the proposed Project would cause a minor short-term increase in the local traffic and congestion in the immediate vicinity of the section of the proposed route if there would be a temporary lane closure. The proposed Project would not increase traffic substantially as compared to the existing traffic volume and the capacity of the street system in the area. At least one lane of travel through each construction area would remain open throughout the construction period to accommodate roadway users (including emergency vehicles). To ensure temporary lane closures do not result in inadequate emergency vehicle movements or impede access to property, Mitigation Measure T-1 (Construction Traffic Control Plan) is proposed and would require review and approval of a project-specific Construction Traffic Control Plan, which would include specific measures to address temporary closures/disruptions to travel lanes and plans to coordinate in advance with emergency service providers. With the incorporation of Mitigation Measure T-1, temporary impacts during construction would be less than significant.

LESS THAN SIGNIFICANT – OPERATION AND MAINTENANCE. Once operational, the proposed Project would have minimal impact on access or movement to emergency service providers. Occasional maintenance activities would be short-term in duration throughout the project area. While temporary lane closures are not anticipated, occasionally maintenance vehicles or equipment may be temporarily present alongside the roadways depending on structure locations; however, at least one lane of travel would remain open at all times. Therefore, maintenance of the proposed Project would have a less than significant impact on emergency vehicle access and movements.

Mitigation Measures for Emergency Access

MM T-1 **Construction Traffic Control Plan.** [see full text under Item (a) above]

5.18. Tribal Cultural Resources

TRIBAL CULTURAL RESOURCES	Potentially Significant Impact	Less Than Significant With Mitigation Incorporated	Less Than Significant Impact	No Impact
(a) Would the project cause a substantial adverse change in the significance of a tribal cultural resource, defined in Public Resources Code §21074 as either a site, feature, place, cultural landscape that is geographically defined in terms of the size and scope of the landscape, sacred place, or object with cultural value to a California Native American tribe, and that is:				
i) listed or eligible for listing in the California Register of Historical Resources, or in a local register of historical resources as defined in Public Resources Code §5020.1(k), or	☐	☒	☐	☐
ii) a resource determined by the lead agency, in its discretion and supported by substantial evidence, to be significant pursuant to criteria set forth in subdivision (c) of Public Resources Code Section 5024.1. In applying the criteria set forth in subdivision (c) of Public Resource Code §5024.1, the lead agency shall consider the significance of the resource to a California Native American tribe.	☐	☒	☐	☐

Significance criteria established by CEQA Guidelines, Appendix G.

5.18.1. Setting

Tribal Cultural Resources (TCRs) are defined under Assembly Bill 52 (AB 52) as resources that include sites, features, places, cultural landscapes, and sacred places or objects that have cultural value or significance to a California Native American tribe. Tribal representatives are considered experts appropriate for providing substantial evidence regarding the locations, types, and significance of TCRs within their traditional and cultural affiliated geographic areas, and therefore the identification and analysis of TCRs should involve government-to-government tribal consultation between the CEQA lead agency and interested tribal groups and/or tribal persons (Public Resources Code [PRC] §21080.3.1(a)).

Additionally, best practices show that a lead agency should make a good faith effort to identify TCRs that may be impacted by a Project even if a Native American tribe does not identify any during consultation. This includes requesting a search of the Native American Heritage Commission's (NAHC) Sacred Lands file, conducting ethnographic research, and using information that has been previously provided during tribal consultation for other projects in the area.

5.18.1.1. Record Search

As documented in Section 5.5 (Cultural Resources), the records search indicates that no prehistoric cultural resources have been previously identified in the Project area.

5.18.1.2. Ethnographic Setting

The Project area is located within the tribal territory of the "Costanoan," a term derived from the Spanish word Costanos, meaning "coast people" or "coastal dwellers." At the time of European ethnic groups' arrival, the Costanoan occupied the central California coast from the northern end of the San Francisco Peninsula south to Big Sur and as far east as the Diablo Range. An estimated 1,400 or more persons of partial Costanoan descent currently reside in the greater San Francisco Bay Area. These individuals now generally prefer the term Ohlone to identify themselves (Margolin, 1978).

The Costanoan language is part of the Penutian language family spoken by other California Indian groups known as the Wintun, Maidu, Miwok, and Yokuts. The Costanoan (Ohlone) language family consists of six dialect clusters, of which three were recorded during the ethnohistoric period, including the San Francisco Bay Costanoan, Mutsun along the Pajaro River, and Rumsen near Monterey and Carmel (Golla, 2011:162 163). Linguistic analysis suggests that the Costanoans moved into the Bay Area from the San Joaquin and Sacramento River regions around 1,500 years Before Present (BP) and replaced the original Hokan speaking population of the Bay Area. This appears to coincide with the appearance of Late Horizon artifact assemblages. Using Spanish mission records and archaeological data, researchers have estimated a Costanoan population of 1,000 to 1,200 individuals for the Santa Clara Valley in 1770 (Levy, 1978:485; King, 1977:54).

The Costanoan practiced a hunting and collecting economy focusing on the collection of seasonal plant and animal resources, including tidal and marine resources from San Francisco Bay. They traded with neighboring groups and exported shells, salt, and cinnabar among other items. At the time of contact with Europeans, the Costanoan people were living in approximately 50 separate and politically autonomous tribelets, with each group having one or more permanent villages surrounded by a number of temporary camps used to exploit seasonally available floral and faunal resources (Levy, 1978:485, 487).

Mission Santa Clara and Mission San José were established in the South Bay in the late 1770s. The aboriginal lifeway disappeared by 1810 due to diseases, a declining birth rate, and the impact of the mission system. Missionization not only decimated local populations but also relocated native peoples from throughout north-central California to the San José area. The Costanoan/Ohlone were transformed from hunters and gatherers into agricultural laborers (and in some cases, craft artisans) who lived at the missions and worked with former neighboring Native American groups such as the Esselen, Yokuts, and Miwok (Levy, 1978:486).

With secularization of the missions by Mexico in 1834, most of the aboriginal population gradually moved to ranchos to work as manual laborers (Levy, 1978:486). During the Mexican Period several ranchos were granted to Native Americans. Rancho Ulistac, located on the west bank of the Guadalupe River in the City of Santa Clara, was granted to “emancipated” Mission Indians Marcello, Pio, and Cristobal in 1845 (Hendry and Bowman, 1940:872 873). Rancho Posolmi, located along the Guadalupe River at the northeastern boundary of the City of Mountain View, was granted to Lopez Indigo (or Yndigo) in 1881 (City of San Jose, 2011).

Contemporary descendants of the Costanoan (Ohlone) Native Americans are not members of federally recognized tribes. Ohlone recognition and assertion began to move to the forefront during the early twentieth century, enforced by legal suits brought against the United States government by Indians of California (1928–1964) for reparations due them for the loss of traditional lands. The Ohlone/Costanoan Muwekma Tribe, consisting of surviving Native American lineages who trace their ancestry through Missions Dolores, Santa Clara and San José. The State of California has recognized the validity of unrecognized tribal groups of local Native Americans and has afforded both the groups and Native American individuals status in regard to consultation for planning and CEQA compliance.

5.18.1.3. Regulatory Setting

State

California Environmental Quality Act. CEQA requires that impacts to TCRs be identified and, if impacts would be significant, that mitigation measures be implemented to reduce those impacts to the extent feasible (PRC §21081). In the protection and management of the cultural environment, both the statute and the CEQA Guidelines (14 California Code of Regulations §15000 et seq.) provide definitions and standards for management of TCRs.

PRC Section 21074 defines a TCR as "a site, feature, place, cultural landscape that is geographically defined in terms of the size and scope of the landscape, sacred place, or object with cultural value to a California Native American tribe." TCRs also include "non-unique archaeological resources" that may not be scientifically significant, but still hold sacred or cultural value to a consulting tribe.

A resource shall be considered significant if it is: (1) listed or eligible for listing in the California Register of Historical Resources (CRHR), or in a local register of historical resources as defined in PRC Section 5020.1(k); or "(2) a resource determined by the lead agency, in its discretion and supported by substantial evidence, to be significant pursuant to criteria set forth in subdivision (c) of PRC Section 5024.1. In applying these criteria, the lead agency must consider the significance of the resource to a California Native American tribe."

Therefore, a project may have substantial adverse change in the significance of a TCR if a project may cause a substantial adverse change in the significance of a tribal cultural resource (PRC §21084.2) or the resource is listed, or eligible for listing, in the CRHR or in a local register of historical resources, and it is demolished (CEQA Guidelines §15064.5(b)(2)).

The fact that a TCR is not listed in the CRHR, determined to be ineligible for listing in the CRHR, not included in a local register of historical resources, or is not identified in a historical resources survey does not preclude a lead agency from determining that the resource may be a historical resource.

CEQA Guidelines Section 15064.5(b)(1) explains that effects on historical resources (or TCRs, if so determined by the lead agency) would be considered adverse if it involves physical demolition, destruction, relocation, or alteration of the resource or its immediate surroundings such that the significance of the resource would be materially impaired. Adverse effects on historical resources may result in a project having a significant effect on the environment. CEQA Guidelines Section 15064.5(c)(3) requires that TCRs receive treatment under PRC Section 21083.2, which requires that these resources be preserved in place or left in an undisturbed state. If these treatments are not possible, then mitigation for significant effects is required, as outlined in PRC Section 21082.2(c).

5.18.1.4. Assembly Bill 52 Tribal Consultation

The proposed Project's effects on potentially buried and therefore presently unidentified TCRs were evaluated using the significance criteria set forth in Appendix G of the CEQA Guidelines and with consideration to AB 52 and the Governor's Office of Planning and Research's "Technical Advisory: AB 52 and Tribal Cultural Resources in CEQA" (OPR, 2017).

Representatives of the Tamien Nation had previously requested to be contacted regarding projects within the City of Santa Clara. Two representatives of the Tamien Nation requesting to be contacted under AB 52 for possible tribal consultation were notified of the proposed Project and invited to engage in consultation. The invitation was extended to each representative by registered mail (April 11, 2024). No responses were received to the emails or letters during the 30-day response period. This concluded AB 52 compliance under CEQA.

5.18.1.5. NAHC Sacred Lands File Search

Aspen requested a search of the NAHC's Sacred Lands file to determine the presence or likelihood of encountering TCRs within the Project area. On March 27, 2024, the NAHC responded that the search was completed with negative results (i.e., no sacred sites are located within the Project area or surrounding vicinity).

5.18.2. Environmental Impacts and Mitigation Measures

(a) Would the project cause a substantial adverse change in the significance of a tribal cultural resource, defined in Public Resources Code section 21074 as either a site, feature, place, cultural landscape that is geographically defined in terms of the size and scope of the landscape, sacred place, or object with cultural value to a California Native American tribe, and that is:

i. Listed or eligible for listing in the California Register of Historical Resources, or in a local register of historical resources as defined in Public Resources Code section 5020.1(k)?

LESS THAN SIGNIFICANT WITH MITIGATION. There are no TCRs listed in, or are known to be eligible for listing in, the CRHR or local register of historical resources within the proposed Project area. Although there is no evidence that TCRs exist within the proposed Project site or immediate vicinity, it is possible that previously unidentified TCRs that may be eligible for inclusion in the NRHP, CRHR, or local registers could be discovered and damaged, or destroyed, during project-related ground disturbance, as both Project options involve ground disturbance. This would constitute a significant impact absent mitigation. Implementation of mitigation measure MM TCR-1 would evaluate and protect unanticipated TCR discoveries, thereby reducing this impact to a less than significant level after mitigation.

MM TCR-1 **Management of Unanticipated Tribal Cultural Resources.** During project construction, should subsurface tribal cultural resources be discovered, all activity in the vicinity of the find shall stop and a qualified archaeologist and an authorized tribal representative shall be contacted to assess the significance of the find according to CEQA Guidelines Section 15064.5 and Section 21074. If any find is determined to be significant, the archaeologist shall determine, in consultation with the implementing agency and any local Native American groups expressing interest, appropriate avoidance measures or other appropriate mitigation. Per CEQA Guidelines Section 15126.4(b)(3), preservation in place shall be the preferred means to avoid impacts to tribal cultural resources. Methods of avoidance may include, but shall not be limited to, Project reroute or redesign, , or identification of protection measures such as capping or fencing. Consistent with CEQA Guidelines Section 15126.4(b)(3)(C), if it is demonstrated that resources cannot be avoided, the qualified archaeologist shall develop additional treatment measures, such as data recovery or other appropriate measures, in consultation with the implementing agency and any local Native American representatives expressing interest in the tribal cultural resource.

ii. a resource determined by the lead agency, in its discretion and supported by substantial evidence, to be significant pursuant to criteria set forth in subdivision (c) of Public Resources Code Section 5024.1. In applying the criteria set forth in subdivision (c) of Public Resource Code Section 5024.1, the lead agency shall consider the significance of the resource to a California Native American tribe?

LESS THAN SIGNIFICANT WITH MITIGATION. No known TCRs were identified during a search of the NAHC's Sacred Lands File, record search, or during ethnographic research. Nevertheless, it is possible that previously unidentified TCRs that may qualify as a significant resource according to lead agency determination could be discovered and damaged or destroyed during ground disturbance, as both Project options involve ground disturbance. Such a discovery or inadvertent damage/destruction to a previously unknown TCR would constitute a significant impact absent mitigation. Implementation of mitigation measure MM TCR-1, which is discussed under Item (a), would evaluate and protect unanticipated TCR discoveries, thereby reducing this impact to a less than significant level.

MM TCR-1 **Management of Unanticipated Tribal Cultural Resources** [see full text under Item (a) above]

5.19. Utilities and Service Systems

UTILITIES AND SERVICE SYSTEMS Would the project:	Potentially Significant Impact	Less Than Significant With Mitigation Incorporated	Less Than Significant Impact	No Impact
(a) Require or result in the relocation or construction of new or expanded water, wastewater treatment or storm water drainage, electric power, natural gas, or telecommunications facilities, the construction or relocation of which could cause significant environmental effects?	☐	☐	☒	☐
(b) Have sufficient water supplies available to serve the project and reasonably foreseeable future development during normal, dry and multiple dry years?	☐	☐	☒	☐
(c) Result in a determination by the wastewater treatment provider which serves or may serve the project that it has adequate capacity to serve the project's projected demand in addition to the provider's existing commitments?	☐	☐	☒	☐
(d) Generate solid waste in excess of state or local standards, or in excess of the capacity of local infrastructure, or otherwise impair the attainment of solid waste reduction goals?	☐	☐	☒	☐
(e) Comply with federal, state, and local management and reduction statutes and regulations related to solid waste?	☐	☐	☐	☒

Significance criteria established by CEQA Guidelines, Appendix G.

5.19.1. Setting

Utility and services system facilities associated with electricity, domestic (potable) water, stormwater, solid waste, communications, and natural gas are provided and maintained by a variety of local purveyors, including cities, counties, special districts, water agencies, and private companies. Table 5.19-1 lists utility providers in the area.

Table 5.19-1. Utility Providers

Natural gas:	Pacific Gas & Electric Company
Electricity:	Silicon Valley Power
Water:	City of San Francisco's Hetch Hetchy aqueduct, Santa Clara Valley Water District, Santa Clara City-owned wells
Wastewater:	San José-Santa Clara Water Pollution Control Plant
Telephone:	AT&T, Comcast
Solid Waste:	Mission Trail Waste Systems, Allied Waste, Green Waste Recovery, and Los Gatos Garbage Company

Source: City of Santa Clara, 2014

5.19.1.1. Utilities

Water Supply

Potable water for the City comes from a combination of sources: the City of San Francisco's Hetch Hetchy aqueduct system, the Santa Clara Valley Water District, and groundwater from City-owned wells. Groundwater comprises almost 70 percent of the City's water supply. Recycled wastewater is also used in the City for certain landscape irrigation, industrial, and construction purposes (City of Santa Clara, 2014).

Electricity and Natural Gas

Silicon Valley Power (SVP) is owned and operated by the City as a municipal electric utility and as a department of the City. SVP maintains approximately 383 miles of underground distribution lines, nearly 200 miles of overhead distribution lines and over 60 miles of transmission lines. Electricity for the City is provided from natural gas, wind, solar, geothermal, and hydroelectric generation resources in California and other western states (Silicon Valley Power, 2023).

The City's natural gas is provided by Pacific Gas & Electric Company. Transmission mains deliver gas from basins in California, Canada, and the Western United States (City of Santa Clara, 2014).

5.19.1.2. Service Systems

Sewage/Wastewater

Sewer systems collect wastewater in the City and transport it via pipelines to the San Jose–Santa Clara Regional Wastewater Facility (RWF) in San Jose, CA. The RWF treats approximately 110 million gallons per day (mgd) of wastewater from cities in Santa Clara County and is able to treat up to 167 mgd. (City of San Jose, 2024).

About 10 percent of the total treated wastewater from the RWF is directed into the South Bay Water Recycling system. The treated wastewater is used for landscaping irrigation, dual plumbing, industrial uses, and other approved uses around the southern Bay Area. Recycled water distribution pipelines are located throughout the City. Treated wastewater that is not directed into the recycled water pipelines is discharged into San Francisco Bay (City of Santa Clara, 2014).

Solid Waste Disposal

Solid waste and recycling collection services in the City is primarily provided by four companies: Mission Trail Waste Systems, Allied Waste, Green Waste Recovery, and Los Gatos Garbage Company. Newby Island Sanitary Landfill is the main landfill that serves the City, although solid wastes are also sent to landfills outside of Santa Clara County (City of Santa Clara, 2014). Newby Island Sanitary Landfill is located at 1601 Dixon Landing Road, Milpitas, CA, approximately 5.5 miles north of the proposed Project. Guadalupe Sanitary Landfill is located in San Jose, and Corinda Los Trancos Landfill is located in Half Moon Bay, approximately 12 miles south and 27 miles northwest from the proposed Project, respectively.

Table 5.19-2 lists the capacities of landfills in or near the City of Santa Clara.

Table 5.19-2 Landfill Capacities

Landfill Name	Total Capacity (cu.yd.)	Remaining Capacity (cu.yd.)	Remaining Capacity (percent)	Maximum Throughput (tons/day)
Newby Island Sanitary Landfill (Cease operation estimated 2041)	57,500,000	16,400,000	28.5	4,000
Guadalupe Sanitary Landfill (Cease operation estimated 2043)	28,238,855	7,518,220	26.6	3,650
Corinda Los Trancos Landfill (Cease operation estimated 2034)	60,500,000	22,180,000	36.7	3,598

Sources: CalRecycle, 2024a; CalRecycle, 2024b; CalRecycle, 2024c

Regulatory Background

This section includes a description of the utilities and public service systems regulatory framework.

Federal

Clean Water Act Section 402: National Pollutant Discharge Elimination System. Section 202 of the Clean Water Act (CWA) establishes the National Pollutant Discharge Elimination System (NPDES) permit program to regulate point source discharges of pollutants to Waters of the United States. Discharges or construction activities that disturb one or more acres, which includes the proposed Project, are regulated under the NPDES stormwater program and are required to obtain coverage permit under a NPDES Construction General Permit. The Construction General Permit establishes limits and other requirements such as the implementation of a Stormwater Pollution Prevention Plan, which would further specify best management practices to avoid or eliminate pollution discharge into the nation's waters. The State Water Resources Control Board (SWRCB) issues both general and individual permits under this program. The SWRCB delegates much of its NPDES authority to nine regional water quality control boards. The proposed Project's NPDES permits would be under jurisdiction of Region 2, the San Francisco Regional Water Quality Control Board.

State

California Government Code – Protection of Underground Infrastructure. The responsibilities of California utility operators working in the vicinity of utilities are detailed in Section 1, Chapter 3.1, "Protection of Underground Infrastructure" (Article 2 of California Government Code §§4216-4216.9). This law requires that an excavator must contact a regional notification center at least two days prior to excavation of any subsurface installation. Any utility provider seeking to begin a project that may damage underground infrastructure can call Underground Service Alert, the regional notification center. Underground Service Alert will notify the utilities that may have buried lines within 1,000 feet of the project. Representatives of the utilities are required to mark the specific location of their facilities within the work area prior to the start of project activities in the area. The code also requires excavators to probe and expose underground facilities by hand prior to using power equipment.

California Integrated Waste Management Act of 1989. Assembly Bill 939 codified the California Integrated Waste Management Act of 1989 in the Public Resources Code and established a hierarchy to help the California Integrated Waste Management Board (CIWMB) and local agencies implement three major priorities under the Integrated Waste Management Act: source reductions; recycling and composting; and environmentally safe transformation and land disposal. Waste diversion mandates are included under these priorities. The duties and responsibilities of the CIWMB have since been transferred to the California Department of Resources Recycling and Recovery (CalRecycle) after the abolishment of the CIWMB in 2010, but all other aspects of the Act remain unchanged.

The Act requires all local and county governments to adopt a waste reduction measure designed to manage and reduce the amount of solid waste sent to landfills. This Act established reduction goals of 25 percent by the year 1995 and 50 percent by the year 2000. Senate Bill 1016 (2007) streamlines the process of goal measurement related to Assembly Bill 939 by using a disposal-based indicator: the per capita disposal rate. The per capita disposal rate uses two factors: the jurisdiction's population (employment can be considered in place of population in certain circumstances) and the jurisdiction's disposal as reported by disposal facilities. CalRecycle encourages reduction measures through the continued implementation of reduction measures, legislation, infrastructure, and support of local requirements for new developments to include areas for waste disposal and recycling on-site.

California Code of Regulations (Title 27). Title 27 (Environmental Protection) of the California Code of Regulations defines regulations and minimum standards for the treatment, storage, processing, and

disposal of solid waste at disposal sites. The State Water Resources Control Board maintains and regulates compliance with Title 27 (Environmental Protection) of the California Code of Regulations by establishing waste and site classifications and waste management requirements for solid waste treatment, storage, or disposal in landfills, surface impoundments, waste piles, and land treatment units. The compliance of the proposed Project would be enforced by the San Francisco RWQCB Region 2 and the California Department of Resources Recycling and Recovery (CalRecycle) (formerly the California Integrated Waste Management Board). Compost facilities are regulated under CCR Title 14, Division 7, Chapter 3.1 Section 17850 through 17895, by CalRecycle. Permit requests, Reports of Waste Discharge, and Reports and Disposal Site Information are submitted to the RWQCB and CalRecycle, and are used by the two agencies to review, permit, and monitor these facilities.

Local

Energy Policies. The purpose of the City's energy policies is to encourage reduced energy use. The following policies in the General Plan generally relate to the proposed Project (City of Santa Clara, 2014):

- **Policy 5.10.3-P10.** Maintain the City's level of service for high quality utilities and telecommunications infrastructure.
- **Policy 5.10.3-P12.** Work with SVP to implement adequate energy distribution facilities to meet the demand generated by new development.

Water Policies. The purpose of the City's water policies is to off-set increased demand associated with the implementation of the City General Plan. The following policies in the General Plan generally relate to the proposed Project (City of Santa Clara, 2014):

- **Policy 5.10.4-P10.** Work with Santa Clara Valley Water District to minimize undesirable compaction of aquifers and subsidence of soils.

5.19.2. Environmental Impacts and Mitigation Measures

(a) Would the project require or result in the relocation or construction of new or expanded water, wastewater treatment or storm water drainage, electric power, natural gas, or telecommunications facilities, the construction or relocation of which could cause significant environmental effects?

LESS THAN SIGNIFICANT. Under Option 1, the entire proposed Project would be built Overhead. Under Option 2, the northern 0.74 miles of the proposed Project would be placed underground. For both Options, the proposed Project would involve construction of a new 115 kV transmission line that will be built to 230 kV standards, and underbuilding existing transmission/distribution lines on the new transmission structures for the southern segment of the Project.

Water, Wastewater Treatment or Storm Water Facilities. Construction of the proposed Project would generate minimal demand for water or wastewater treatment. A water truck or hose may be on-site to support dust suppression during ground disturbing work. Any water used for dust control would be dispersed onsite and would either evaporate or be absorbed into the ground; therefore, no wastewater generation is anticipated from this use.

Concrete would be required for pole foundations and any vaults and underground conduits for lines underground. Excess concrete from construction as well as removed concrete foundations of poles no longer needed would be disposed of at an approved site away from the work area. Dewatering may be necessary if groundwater is encountered. Portable toilets would be provided for construction work crews and would be removed after construction is completed. These toilets will be maintained by a licensed sanitation contractor.

The proposed Project would not result in any increased stormwater flow entering stormwater drainage systems and therefore would not require, or result in the construction of, new stormwater drainage facilities or the expansion of existing facilities.

Upon completion of construction, the proposed Project would not generate any demand for water or wastewater treatment. There would be no sanitary sewer hookup as part of the Project. Existing wastewater and water treatment facilities are adequate to accommodate the demand generated by the proposed Project during construction. Thus, the Project would have less than significant impact that would not cause the need for the construction or expansion of water or wastewater treatment facilities or storm water drainage.

Electric Power, Natural Gas, or Telecommunications Facilities. No new natural gas or telecommunications facilities would be required in support of the Project. Construction of the proposed Project would have the potential to disrupt existing underground utility systems or cause a collocation accident. Coordination with other utility system owners and compliance with California Government Code §§4216–4216.9 would reduce the likelihood of accidental disruptions from a collocation accident. Prior to initiating underground construction, including drilling for structure footings, SVP or its contractor would contact Underground Service Alert to identify any existing underground utilities in the construction zone.

Option 1 would not require the expansion or development of new utility systems. However, it would require minor modifications to some existing electric power and distribution lines and substations. Portions of the 115 kV line would have existing 60 kV circuits underbuilt on the new transmission line. Construction for Option 1 would include minimal utility relocation work at three locations. During routine operation and maintenance of the proposed Project, SVP's new transmission line would be unstaffed and would not create any need for new or expanded utilities or service systems.

Option 2 would require underground construction and would need to cross existing utilities owned by PG&E, SVP, and the City, numerous times. These utilities range from communication, electric, natural gas, and water lines, as well as sanitary sewers and a storm drain. Due to these conflicts, the transmission line would need to be buried approximately 20 feet deep in some areas.

There are 25 existing underground utilities in the corridor where the line would be underground. These include gas, sewer, storm, water, and electric lines. Option 2 would require the relocation of approximately 300 feet of two existing transmission natural gas lines, owned by SVP and PG&E, to facilitate the installation of two underground vaults for the Project. The SVP-owned transmission natural gas line is a high-pressure gas line for the Donald Von Raesfeld Power Plant (DVR). The relocation of this line would require a full shutdown of DVR and would need to be coordinated to occur during off-peak times of the year, November through March. It is unknown when the PG&E transmission natural gas line could be relocated. SVP would coordinate with PG&E to schedule the relocation work.

During routine operation and maintenance of the proposed Project, under either option, SVP's new transmission line would be unstaffed and would not create any need for new or expanded utilities or service systems. While the relocation of some utilities would create impacts, these would be similar to routine installation of utilities and be of limited extent. Any relocation work would be required to comply with applicable ordinances, standards, and best practice requirements. Therefore, impacts would be less than significant.

(b) Would the project have sufficient water supplies available to serve the project and reasonably foreseeable future development during normal, dry and multiple dry years?

LESS THAN SIGNIFICANT. Water would be used for the proposed Project primarily for the concrete pier foundations for the tubular steel poles. For an approximate foundation size of 8 feet in diameter and 35 feet deep, about 1,785 cubic feet of water would be required at each foundation. For Option 1, it is estimated that there would be approximately 40 poles. Option 2 would require approximately 32 poles but would

also require concrete for underground duct banks and vaults. This water demand would be a one-time need.

Water may also be used for dust suppression, if necessary, during the 14-month construction timeframe (for Option 1 only), although this would be a limited need. The volume of water required for dust control is not known. However, the amount of water for dust suppression during construction is considered to be nominal in comparison to available municipal water supply, and water use for construction would be periodic and temporary during the construction period.

Water trucks or hydrants would provide water for these activities as needed. Upon completion, the proposed Project would not generate any demand for water. Therefore, the proposed Project would have sufficient water supplies available to serve the Project and reasonably foreseeable future development during normal, dry and multiple dry years.

(c) Would the project result in a determination by the wastewater treatment provider which serves or may serve the project that it has adequate capacity to serve the project's projected demand in addition to the provider's existing commitments?

LESS THAN SIGNIFICANT. The proposed Project would generate minimal wastewater during construction. Foundation drilling slurry for the installation of the tubular steel poles would be disposed of at an approved site away from the work area. The proposed Project would also require portable toilets for construction workers and the waste would be disposed of at appropriately licensed official facilities with adequate capacity. As discussed in Item (b) above, existing wastewater facilities would adequately accommodate the minor demand caused by Project construction while serving existing commitments. Therefore, this impact would be less than significant.

(d) Would the project generate solid waste in excess of State or local standards, or in excess of the capacity of local infrastructure, or otherwise impair the attainment of solid waste reduction goals?

LESS THAN SIGNIFICANT. Construction debris and waste generated during construction of the Project would be transported to staging areas for temporary storage or directly to a facility for recycling or disposal. Existing wood poles removed as part of the Project would be moved to an area service center or staging area collection bin for transport with other materials for disposal at a licensed Class I or Class II landfill or a composite lined portion of a solid waste landfill. Total solid waste generated by construction of the proposed Project is anticipated to be minor compared to the capacity of local existing landfills, as identified in Table 5.19-2, Landfill Capacities. The landfills identified in Table 5.19-2 are not expected to close for about another 20 years. During operation, the proposed Project would not be staffed and would not generate notable quantities of solid waste. Therefore, the impact of solid waste disposal on local infrastructure and landfill capacity would be less than significant.

(e) Would the project comply with federal, state, and local management and reduction statutes and regulations related to solid waste?

NO IMPACT. The California Integrated Waste Management Act of 1989, which emphasizes resource conservation through the reduction, recycling, and reuse of solid waste guide solid waste management requires that localities conduct a Solid Waste Generation Study (SWGS) and develop a Source Reduction Recycling Element (SRRE). The proposed Project would operate in accordance with these applicable Solid Waste Management Policy Plans by recycling materials where feasible. As identified in Table 5.19-2, Landfill Capacities, the landfills serving the site would have sufficient capacity to accommodate Project construction solid waste disposal needs, and Project solid waste disposal would not result in the need for new or expanded landfill facilities. Therefore, the proposed Project would comply with federal, State, and local management and reduction statutes and regulations related to solid waste disposal limits and landfill capacities. No impact would occur.

5.20. Wildfire

WILDFIRE If located in or near state responsibility areas or lands classified as very high fire hazard severity zones, **would the project:**	Potentially Significant Impact	Less Than Significant With Mitigation Incorporated	Less Than Significant Impact	No Impact
(a) Substantially impair an adopted emergency response plan or emergency evacuation plan?	☐	☒	☐	☐
(b) Due to slope, prevailing winds, and other factors, exacerbate wildfire risks, and thereby expose project occupants to pollutant concentrations from a wildfire or the uncontrolled spread of a wildfire?	☐	☐	☒	☐
(c) Require the installation or maintenance of associated infrastructure (such as roads, fuel breaks, emergency water sources, power lines or other utilities) that may exacerbate fire risk or that may result in temporary or ongoing impacts to the environment?	☐	☐	☒	☐
(d) Expose people or structures to significant risks, including downslope or downstream flooding or landslides, as a result of runoff, post-fire slope instability, or drainage changes?	☐	☐	☒	☐

Significance criteria established by CEQA Guidelines, Appendix G.

5.20.1. Setting

Wildland fire protection in California is the responsibility of the State, local, or federal government, depending on the location. The California Department of Forestry and Fire Protection (CAL FIRE) is required by law to map areas of significant fire hazards based on fuels, terrain, weather, and other relevant factors. These zones, which are referred to as Fire Hazard Severity Zones (FHSZ), influence how people construct buildings and protect property to reduce risk associated with wildland fires. FHSZ maps identify the likelihood that an area will burn over a 30 to 50-year period without considering that modifications may occur, such as fuel reduction efforts. Risk is not indicated by the maps. Risk is the potential damage that can be done by a fire, based on existing conditions. Risk can be reduced by various strategies, such as creation of defensible space, fuel load reduction, and, in the case of structures, the use of sprinklers and ignition-resistant building materials and construction. The City of Santa Clara is not located in a FHSZ in the CAL FIRE wildland fire hazard maps, primarily due to its urban conditions, flat terrain, and low fuel load (CAL FIRE, 2007). Fire protection within the City is discussed in Section 5.15 (Public Services).

Regulatory Background

Federal

A variety of transmission line and tower clearance standards are used throughout the electric transmission industry. Nationally, most transmission line owners follow the National Electric Safety Code (NESC) rules or ANSI guidelines, or both, when managing vegetation around transmission system equipment. The NESC deals with electric safety rules, including transmission wire clearance standards, whereas the applicable ANSI code deals with the practice of pruning and removing vegetation.

State and Local

California Public Utilities Commission (CPUC) General Order (GO) 95. CPUC's GO 95 is the key standard governing the design, construction, operation, and maintenance of overhead electric lines in the State. The CPUC has promulgated various Rules to implement the fire safety requirements of GO 95, including:

- *GO 95 Rule 31.2* requires that lines be inspected frequently and thoroughly to ensure that they are in good condition, and that lines temporarily out of service be inspected and maintained in such condition so as not to create a hazard.

- *GO 95 Rule 35* governs requirements that vegetation management activities be performed in order to establish necessary and reasonable clearances.
- *GO 95 Rule 38* establishes minimum vertical, horizontal, and radial clearances of wires from other wires.

California Public Resources Code Sections 4294 and 4293. The California Public Resources Code (CPRC) Sections 4292 and 4293 specify requirements related to fire protection and prevention in transmission line corridors. CPRC Section 4292 states that any person that owns, controls, operates, or maintains any electrical transmission or distribution line has primary responsibility for fire protection of such areas, and shall maintain around and adjacent to any pole or tower which supports a switch, fuse, transformer, lightning arrester, line junction, or dead end or corner pole, a firebreak which consists of a clearing of not less than 10 feet in each direction from the outer circumference of such a pole or tower (CPRC 4292).

Power Line Fire Prevention Field Guide 2008 Edition. CAL FIRE, the state's three investor-owned utilities (Pacific Gas and Electric [PG&E] Company, Southern California Edison Company, and San Diego Gas and Electric), and other California electric utilities have mutually developed a comprehensive field guide for their personnel. Its purpose is "to provide information and guidance to the personnel of the fire service agencies and electrical operators for minimum uniform application within the areas of their respective jurisdiction and franchise responsibilities." In addition to safety of the public, the guide details fire hazard reduction maintenance procedures for the safety of conductors and certain hardware.

PG&E's Public Safety Power Shutoff Program. The Public Safety Power Shutoff program was developed in cooperation with state utility regulators at the CPUC. A utility shuts off electricity on transmission and distribution lines in fire-prone areas during high fire-risk periods, including:

- Red flag warning declared by the National Weather Service;
- Low humidity levels – generally 20% and below; and/or
- Forecasted sustained winds generally above 25 mph and wind gusts in excess of approximately 45 mph.

SVP operates and maintains the distribution and transmission grid inside the City, yet the larger transmission grid that brings most of SVP's energy into the City is integrated throughout the State. Therefore, if large transmission lines are de-energized or constrained, then SVP may need to reduce load quickly to help the greater transmission grid. Depending on the severity of the event, it may mean power shutoffs or rolling outages in the City.

5.20.2. Environmental Impacts and Mitigation Measures

(a) Would the project substantially impair an adopted emergency response plan or emergency evacuation plan?

LESS THAN SIGNIFICANT WITH MITIGATION- CONSTRUCTION. The City of Santa Clara does not have an adopted emergency response plan or an emergency evacuation plan. The Project does not cross over or is not near any roads in a very high FHSZ nor would it require complete road closures. As stated in Section 5.17, Transportation, the Project may require brief temporary lane closures/disruptions, however, at least one lane of travel through each construction area would remain open throughout the construction period to accommodate roadway users (including emergency vehicles). During temporary lane closures, SVP would implement traffic control protocols and a project-specific traffic plan under Mitigation Measure T-1 (Construction Traffic Control Plan) to accommodate traffic flow. There is no other aspect of the Proposed Project, aside from traffic flow, that could impair an emergency response effort. Therefore, with incorporation of mitigation, impacts from Project construction would not substantially impact emergency response or evacuation plans.

NO IMPACT – OPERATIONS AND MAINTENANCE. Once operational, the proposed Project would have minimal impact on emergency response or evacuation. Occasional maintenance activities would be of short duration throughout the project area. While temporary lane closures are not anticipated, maintenance

vehicles or equipment may be temporarily present alongside the roadways depending on structure locations and maintenance activities. However, at least one lane of travel would remain open at all times and any closure or disruption would be of limited duration (likely less than one day).

Option 1 would have a shorter duration of maintenance compared to Option 2, because overhead lines are easier to access. Additionally, Option 1 would have a shorter downtime in the event of a power outage or emergency, due to the visibility and accessibility of the line. However, the maintenance for both options would be of short duration and would be temporary. Therefore, maintenance of the proposed Project would not substantially impair an emergency response plan or emergency evacuation plan.

Mitigation Measures for Emergency Response

MM T-1 Construction Traffic Control Plan. [see full text in Section 5.17, Transportation]

(b) Would the project, due to slope, prevailing winds, and other factors, exacerbate wildfire risks, and thereby expose project occupants to, pollutant concentrations from a wildfire or the uncontrolled spread of a wildfire?

LESS THAN SIGNIFICANT - CONSTRUCTION. The project would not result in any occupied facilities and the City area is not located in a FHSZ as shown on CAL FIRE wildland fire hazard maps (CAL FIRE, 2007). However, there are residences in the Project vicinity located on Lafayette Street near the proposed transmission line route. Therefore, the following analysis focuses on the potential for Project construction and operation to increase the exposure of residences to wildfire risks.

During construction, Project-related activities have the potential to be a fire ignition source. Examples of ignition sources include improperly discarded smoking materials or sparks from welding or from metal striking metal or stone, igniting surrounding vegetation or other flammable materials. To reduce fire risk, SVP would implement standard fire prevention protocols. In addition, the proposed Project is located in a flat, urban environment without extensive easily ignited vegetation, and construction activities would occur over a limited duration (14 months for Option 1). Impacts from wildfire risk during construction would be less than significant and no mitigation is required.

LESS THAN SIGNIFICANT – OPERATIONS AND MAINTENANCE. Electrical lines can start a fire if an object such as a tree limb, kite, or mylar balloon simultaneously contacts the power line conductors and a second object, such as the ground or a portion of the supporting pole or tower. System component failures and accidents during maintenance activities can also cause line faults that result in arcing on power lines. Power lines are also subject to conductor-to-conductor contact, which can occur when extremely high winds force two conductors to oscillate so excessively that they contact one another. This contact can result in arcing (sparks) that could ignite nearby vegetation. Aging, failing equipment increases the risk of system failures and faults.

The Project would update and install new electrical line equipment, reducing the risk of a system failure or line fault due to aging equipment. While the proposed Project would result in additional overhead electrical lines, the increase in risk of ignition associated with the additional line would be minimal relative to baseline conditions and the Project is not located in an area of high wildfire risk. Operation and maintenance activities would be incorporated into SVP's existing O&M schedule for its existing transmission lines, substations, and associated facilities. As with current operations and maintenance, SVP would comply with all current federal and State laws related to vegetation clearance and fire prevention, reducing wildfire risks. Impacts from wildfire risk during operations and maintenance would be less than significant and no mitigation is required.

(c) Would the project require the installation or maintenance of associated infrastructure (such as roads, fuel breaks, emergency water sources, power lines or other utilities) that may exacerbate fire risk or that may result in temporary or ongoing impacts to the environment?

LESS THAN SIGNIFICANT. The proposed Project includes construction of a new transmission line. Most activities associated with the proposed Project would occur along existing transmission line ROWs in an urban area and would rely primarily on existing paved roads for access. No fuel breaks or emergency water sources would be required. None of the new transmission lines would be within a wildfire risk area.

Operation and maintenance activities would be incorporated into SVP's existing O&M schedule for its existing transmission lines, substations, and associated facilities. As with current operations and maintenance, SVP would comply with all current federal and State laws related to vegetation clearance and fire prevention. No additional infrastructure that has not been considered would be installed, and no additional fire risk impacts would occur because of operating and maintaining the Project.

(d) Would the project expose people or structures to significant risks, including downslope or downstream flooding or landslides, as a result of runoff, post-fire slope instability, or drainage changes?

LESS THAN SIGNIFICANT. The Project would not create occupied structures and thus could not expose residents to increased fire risk. The proposed Project is situated in an urban area with flat topography and low fuel load. During construction, there would be ground disturbance at the pole structure locations and, if sections of the line are buried, along the trench. The proposed Project would use up to two staging areas, each approximately one acre, in areas that are already disturbed. As with current operations and maintenance, SVP would comply with all current regulations related to vegetation clearance and fire prevention. Given the low fire risk in a flat area with no known historic landslides or slope instability and the limited amount of surface disturbance proposed, the exposure of people or structures to risks as a result of runoff, post fire slope instability, or drainage changes would be less than significant.

5.21. Corona and Induced Current Effects

5.21.1. Environmental Setting

5.21.1.1. Corona

Corona is one of the phenomena associated with all energized electrical devices, including high voltage transmission lines. The localized electric field near a conductor can be sufficiently concentrated to ionize air close to the conductors. This can result in a partial discharge of electrical energy called a corona discharge, or corona. The corona effect is the physical manifestation of discharged electrical energy into very small amounts of sound, radio noise, heat, and chemical reactions with air components. It is a phenomenon associated with all energized electrical devices but is especially common with high-voltage power lines.

The amount of corona produced by a power line is a function of several factors, including line voltage, conductor diameter, conductor locations in relation to each other, condition of conductors and hardware, and local weather conditions including power line elevation above sea level. Corona typically becomes a design concern for 230 kV and higher power lines that are overhead (i.e., transmission lines on poles or towers). It is less noticeable for lines that are operated at lower voltages (i.e., subtransmission and distribution-sized lines). The electric field gradient is greatest at the conductor surface. Larger-diameter conductors have lower electric field gradients at the conductor surface and, therefore, lower corona noise than smaller-diameter conductors. The corona effect would not be a design concern for underground portions of power lines, regardless of voltage level, because the energized conductors are fully enclosed in a semi-conducting layer within insulated cables that serve to equalize the electrical gradient at the surface of the components.

5.21.1.2. Induced Currents

Electric currents can be induced in metallic objects located within the electric fields created by power lines. An electric current can flow when an object has an induced charge and a path to ground is present. The amount of induced current that can flow is important to evaluate from a safety perspective because of the potential for electrical shocks to people and the possibility of electric arcs that could form across small gaps between conductive surfaces. These arcs can have the secondary effect of igniting flammable materials in the vicinity of the arc. In addition, induced currents are evaluated for their potential to lead to corrosion of metallic objects from the discharge of the induced current to ground.

From a safety perspective, the National Electrical Safety Code (NESC) specifies that transmission lines be designed to limit short circuit current from vehicles or large objects near the line to no more than 5 milliampere (mA). The NESC also addresses shock hazards to the public by providing guidelines on minimum clearances to be maintained for practical safeguarding of persons during the installation, operation, or maintenance of overhead transmission lines and their associated equipment.

5.21.2. Environmental Impacts and Assessment

Concerns about project interference with existing businesses and future development in the area were raised during scoping. The CEQA Guidelines do not provide significance criteria for evaluating impacts from corona or induced current effects. Corona and induced current from high voltage power lines can cause environmental impacts through:

- Audible noise
- Radio and television interference
- Computer interference
- Disturbance of cardiac pacemakers
- Ignition of flammable materials
- Corrosion of buried metallic objects

The proposed Project involves construction of a new 115 kV transmission line, relocation of existing distribution power lines and/or telecommunication lines along some segments of the new 115 kV transmission line, and minor modifications at two existing substations affected by the Project. The audible corona noise level caused by the 115 kV power line was not quantified. However, circuits operating at 115 kV typically cause noise at levels comparable to the ambient baseline noise levels in the vicinity of the line. Although the Proposed Project would be constructed to accommodate a 230 kV line, it would be operated at 115 kV. If, in the future, the line was to be upgraded to 230 kV, corona may become a concern. The applicant has proposed to install corona rings on all insulators to prevent future corona impacts. Therefore, the impact of audible noise from the corona effect would be less than significant.

Although corona can generate high frequency energy that may interfere with broadcast signals or electronic equipment, this is generally not a problem for transmission or lower voltage power lines. The Institute of Electrical and Electronic Engineers (IEEE) has published a design guide (IEEE, 1971) that is used to limit conductor surface gradients so as to avoid corona levels that would cause electronic interference. Corona or gap discharges related to high frequency radio and television interference impacts are dependent upon several factors, including the strength of broadcast signals, and are anticipated to be very localized if they occur. Individual sources of adverse radio/television interference impacts can be located and corrected on the power lines. Conversely, magnetic field interference with electronic equipment such as computer monitors can be corrected through the use of software, shielding or changes at the monitor location. As a result, impacts from corona, radio/television interference, and magnetic field interference would be less than significant.

Induced currents and voltages on conducting objects near the proposed power lines would not pose a threat in the environment if the conducting objects are properly grounded. Project construction and operation would be done in accordance with SVP's existing inspection and maintenance program and safety practices. Likewise, induced currents would not increase the risk of fuel ignition in the area.

The electric fields associated with high voltage transmission lines may be of sufficient magnitude to impact operation of a few older model pacemakers resulting in them reverting to an asynchronous pacing (IEEE, 1979). Substantial adverse effects would not occur with prolonged asynchronous pacing; periods of operation in this mode are commonly induced by cardiologists to check pacemaker performance. Therefore, while the transmission line's electric field may impact operation of some older model pacemakers, the result of the interference would be of short duration and is not considered significant or harmful. No mitigation measures would be required or recommended.

5.22. Mandatory Findings of Significance

MANDATORY FINDINGS OF SIGNIFICANCE	Potentially Significant Impact	Less Than Significant With Mitigation Incorporated	Less Than Significant Impact	No Impact
(a) Does the project have the potential to substantially degrade the quality of the environment, substantially reduce the habitat of a fish or wildlife species, cause a fish or wildlife population to drop below self-sustaining levels, threaten to eliminate a plant or animal community, substantially reduce the number or restrict the range of a rare or endangered plant or animal or eliminate important examples of the major periods of California history or prehistory?	☐	☒	☐	☐
(b) Does the project have impacts that are individually limited, but cumulatively considerable? ("Cumulatively considerable" means that the incremental effects of a project are considerable when viewed in connection with the effects of past projects, the effects of other current projects, and the effects of probable future projects.)	☐	☒	☐	☐
(c) Does the project have environmental effects that would cause substantial adverse effects on human beings, either directly or indirectly?	☐	☒	☐	☐

Significance criteria established by CEQA Guidelines, Appendix G.

(a) Does the project have the potential to substantially degrade the quality of the environment, substantially reduce the habitat of a fish or wildlife species, cause a fish or wildlife population to drop below self-sustaining levels, threaten to eliminate a plant or animal community, substantially reduce the number or restrict the range of a rare or endangered plant or animal, or eliminate important examples of the major periods of California history or prehistory?

LESS THAN SIGNIFICANT WITH MITIGATION. The proposed Project would be in a highly urbanized area of the City. Project components would be within existing substations in existing roads, or within or adjacent to the public right-of-way. Little vegetation would be affected. Some trees may be removed to accommodate poles and conductors, and other trees would be trimmed. Adjacent properties along the Project include maintained landscaping consisting of trees, shrubs, and grass. As described in Section 5.4, Biological Resources, there are no special-status plants or animals in the Project area due to the lack of habitat in such a highly urbanized environment. The Project is not expected to result in impacts to habitats that support sensitive species. However, some special-status birds may use the Project vicinity for foraging, although the habitat is marginal and the potential for occurrence of these species is very low. - Implementation of mitigation measures MM BIO-1 through MM BIO-5 would reduce these potential impacts to less than significant levels.

Similarly, Section 5.5 (Cultural Resources) and Section 5.18 (Tribal Cultural Resources) show that the Project would have a less than significant impact to important examples of the major periods of California history or prehistory. The records search indicates that no prehistoric cultural resources have been previously identified in the project area. However, as described in Section 5.5 (Cultural Resources) and Section 5.18 (Tribal Cultural Resources), the proposed Project could have an adverse effect on previously undiscovered cultural or tribal cultural resources. With implementation of mitigation measures MM CR1, MM CR-2, and MM TCR-1 for unanticipated discoveries of archaeological and historical resources or human remains- and mitigation measures MM G-2 for paleontological resources, impacts would be less than significant, and the Project would not eliminate important examples of major periods of California history or prehistory.

(b) Does the project have impacts that are individually limited, but cumulatively considerable? ("Cumulatively considerable" means that the incremental effects of a project are considerable when viewed in connection with the effects of past projects, effects of other current projects, and the effects of probable future projects.)

LESS THAN SIGNIFICANT WITH MITIGATION. CEQA defines a cumulative impact as an effect that is created as a result of the combination of the proposed Project together with other projects (past, present, or future) causing related impacts. Cumulative impacts of a project need to be evaluated when the project's incremental effect is cumulatively considerable and, therefore, potentially significant. The proposed Project is planned for construction from November 2026 through March 2028. Once constructed, the Project would have little to no environmental impacts except for maintenance.

Two projects identified from the Planning Department's current project list are within 0.25 miles of the proposed Project. The projects are in the application stage and were reviewed to identify whether the NRS-KRS project could contribute to cumulatively significant impacts when evaluated in combination with these projects. The projects are:

- 4220 Network Circle – Involving demolition of existing structures and redevelopment of a 38-acre site near Lafayette Street and Montague Expressway with 584 housing units, open space, and parking. Status as of May 2024: Pending Review.
- 960 Central Expressway – Involving demolition of existing warehousing and loading docks and construction of three buildings for warehousing and/or datacenter uses. Status as of May 2024: Pending Review.

As discussed in Sections 5.1 through 5.21 potential impacts of the proposed Project would occur during construction, with few, if any, operational effects. Because the construction-related impacts of the Project would be temporary and localized, they would have the potential to combine with similar impacts of other projects only if they occur at the same time and in close proximity. The cumulative temporary and localized impacts of the construction of the proposed Project are considered by issue area below. The potential construction period for the two identified projects is unknown, as they have not yet undergone review and approval. Also, actual construction initiation and duration often varies from what is initially anticipated as a result of unforeseen circumstances including market conditions and availability of financing among others. In the future, applications may be submitted for other unknown projects in the vicinity of the Project and may overlap with the Project construction period. Because the area is built out, any projects would be reconstruction or construction of replacement land uses on already occupied sites. Given the built-out nature of the Project vicinity and the capacity of existing thoroughfares, there would be no post-construction impacts from the proposed Project that would have the potential to combine with impacts from the projects listed.

The 4220 Network Circle application was filed in March 2024. To date, no hearings have been scheduled and CEQA review has not begun. If construction of the Network Circle proposed project were to coincide with that of the proposed NRS-KRS Project, both projects would use 4-lane Layette Street and 6-lane Montague Expressway for access to work areas. The Network Circle project site is close to Montague Expressway and construction related traffic using the Expressway to Lafayette Street would be on Lafayette Street for 500 feet from the west bound Expressway exit and 1,000 feet from the east bound exit. Thereafter, traffic would be within the project site on the former Agnew State Hospital property. Construction traffic could also access the work site using Lafayette Street from the north. Construction of the NRS-KRS transmission line Project would be on Lafayette Street in the vicinity of the Network Circle project, and would be relatively short term – requiring installation of pole foundations approximately 350 feet apart, installation of tubular steel transmission poles, and stringing of conductor.

For the 960 Central Expressway project, the Notice of Preparation of an EIR and of a scoping meeting was published in December 2021. To date, the EIR has not been prepared. The Central Expressway proposed

project is proposed at the southwest corner of the intersection of Central Expressway and Lafayette Street, south of KRS. It is expected that construction related traffic for the Central Expressway project would be primarily on Central Expressway with some traffic on Lafayette Street. The NRS-KRS Project would enter KRS north of the Expressway with most of the Project south of Highway 101 within SVP property. It is unknown if the projects would overlap during construction.

Aesthetics. Potential views of the proposed Project are limited by the existing structures, walls, and vegetation along the alignment. NRS and KRS are behind screening walls and set back from nearby roads. These facilities are already visual elements of the local urban setting and viewscape, and the continued urbanization of the area is the likely trend for the foreseeable future with little change in its overall visual character. The impacts from the construction of the Project would be minimal because the work would be temporary in nature. The proposed Project represents only a relatively minor incremental change in cumulative conditions given the urban nature of the location and the presence of existing features similar to the proposed Project. Therefore, the Project's visual effects are less than significant and are not considerable enough to represent a significant cumulative impact.

Agriculture and Forestry Resources. There is no agricultural activity at the site or any of the cumulative project sites. The Project would not contribute to cumulative impacts to agriculture and forestry resources.

Air Quality. Air emissions would occur during construction of the proposed Project. Emissions would include criteria air pollutants that could contribute to existing or projected violations of the ambient air quality standards for ozone and PM10. Other pollutants resulting from construction activities are accounted for in emissions inventories for regional air quality maintenance plans and would not impede attainment or maintenance of ambient air quality standards. Foundation excavation and other construction-related activities could potentially expose sensitive receptors to construction-related emissions, including emissions of fugitive dust and DPM, which could expose the receptors to increased health risk and hazards. These would occur only during construction and would be less than significant with implementation of mitigation measure MM AQ-1 (Implement Basic Construction Air Quality Mitigation). Any potential adverse cumulative air quality impacts would be short-term (lasting for the duration of construction) and would not be cumulatively considerable; therefore, the cumulative impact would be less than significant. The operation and maintenance emissions (e.g., limited vehicle use) would be less than the emissions during construction activities and also less than the significance thresholds.

Concurrent construction of other projects in close proximity to the proposed Project would result in increased local air quality impacts for the duration of simultaneous construction activities. However, simultaneous construction projects would also need to comply with BAAQMD rules and regulations regarding criteria pollutants. Any potential adverse cumulative air quality impacts would be short-term (lasting for the duration of construction) and would not be cumulatively considerable; therefore, the cumulative impact would be less than significant.

Biological Resources. The proposed Project and the cumulative projects are located within an urbanized area and near busy roadways. The proposed Project area contains no habitat for special-status plant species and limited habitat suitable for most special-status wildlife species unless they are adapted to urban environments. However, if present within or adjacent to the proposed Project area, the proposed Project could result in direct or indirect impacts to special-status wildlife species. These impacts would be avoided or minimized with the implementation of Mitigation Measures (MMs) BIO-1 through BIO-5.

As described in Section 4 Project Description and in Appendix D, some vegetation and tree removal or tree trimming may be required for pole installation and vehicle access and to minimize the risk of fire by providing clearance between conductors and trees. Implementation of MM BIO-6 will ensure the proposed Project complies with the local policies and ordinances by following the tree protection requirements and recommendations of the City arborist.

The Project would not represent a significant contribution to cumulative impacts. Given the built-up nature of the City, other cumulative projects in the vicinity have limited biological resources. Impacts to biological resources during operation and maintenance of the NRS-KRS Project would be less than significant, therefore, no contribution to cumulative impacts would occur.

Cultural Resources. There are no known historical or unique archaeological resources identified within the proposed Project area; however, previously unknown buried historical resources or human remains could be discovered and damaged, or destroyed, during ground disturbing work. Short-term construction activities and operation and maintenance activities would not significantly affect any unknown cultural or paleontological resources or human remains with the implementation of mitigation measures MM CR-1 (Worker Training and Management of Unanticipated Discoveries of Historical Resources, Unique Archaeological Resources) and MM CR-2 (Treatment of Human Remains), as discussed in Section 5.5, Cultural Resources. No cultural resources would be affected during Project construction or during operation of the Project, and no contribution to cumulative impacts would occur.

Energy. Construction activities would consume nonrenewable energy resources to power construction equipment and vehicles. The short-term use of fuels by equipment and motor vehicle trips during construction would be necessary to install the transmission line. The energy used by the Project during construction and operation would not be wasteful, inefficient, or unnecessary considering the new facilities that would increase system reliability and power deliverability. The proposed Project would not conflict with any state or local plan for prioritizing renewable energy or energy efficiency, and there would be no considerable contribution to a cumulative impact associated with energy.

Geology and Soils. As discussed in Section 5.7, the proposed Project would be located in an area mapped as likely to experience strong ground shaking, including ground shaking that could result in liquefaction-related phenomena. Projects in the vicinity of the NRS-KRS Project would also be located in areas mapped as likely to experience strong ground shaking potentially combining to expose people or structures to potential significant cumulative impacts. All construction would be required to comply with building code standards that take into account effects of seismic events. For the proposed Project, implementation of mitigation measure MM G-1 (Conduct Geotechnical Investigations), which would ensure that Project design would reduce the potential for geologic and seismic hazards, such as liquefaction and expansive soils. The Project would not increase potential risks associated with seismic events or other geologic hazards. Short-term construction impacts to soils, including unstable soils, have the potential to occur; however, final geotechnical recommendations would reduce the impacts to a less than significant level and the proposed Project impacts are not considerable enough to represent a significant cumulative impact. Adherence to similar design and engineering standards, which are applicable to the identified cumulative projects, ensure that their cumulative impacts to geology and soils would also be less than significant.

There is a limited potential for paleontological resources to occur on the site. Mitigation measure MM G-2 (Work Training and Management of Unanticipated Discoveries of Paleontological Resources) would ensure any potential impacts are less than significant and would not contribute to a cumulatively considerable impact.

Greenhouse Gas Emissions. Because the direct environmental effect of GHG emissions is to influence global climate change, GHG emissions are by their nature inherently a cumulative concern with a cumulatively global scope. Project-specific GHG emissions would occur from the burning of fuels required by construction equipment and vehicles during construction activities. Primary GHG emissions during construction are associated with CO_2 from the combustion of gasoline and diesel fuel in equipment and vehicles. CH_4 and N_2O are also emitted from fuel combustion but at rates of less than 1 percent of the mass of CO_2 combustion emissions. Construction-related emissions would be distributed over 14 months (for Option 1). These estimated levels would not exceed the threshold level of 25,000 metric tons per year for annual mandatory reporting of GHGs.

GHG emissions from operation and maintenance would be minimal, as the transmission line would require only infrequent maintenance. The minor quantity of GHG emissions created during construction and for operation and maintenance would not be a cumulatively considerable impact.

Hazards and Hazardous Materials. The use of hazardous materials for the Project would be minimal during construction and operation. Hazardous materials would be stored and used in compliance with applicable regulations. Minor spills or releases of hazardous materials could occur due to upset or improper handling and/or storage practices during construction activities. Impacts from routine use, transportation, disposal, and accidental spillage of hazardous materials would be reduced to a less than significant level with implementation of mitigation measure MM HM-1 (Hazardous Substance Control and Emergency Response) discussed in Section 5.9, Hazards and Hazardous Materials; no contribution to cumulative impacts would occur.

Hydrology and Water Quality. The Project would not change existing drainage patterns along the route, which is covered primarily with impervious surfaces. The proposed Project would require minimal water for dust control and concrete during construction. Dewatering during foundation excavation for poles is possible, but not anticipated. In the event that dewatering is necessary, the water would be pumped out and treated and encountered groundwater would be tested to meet requirements set by the Regional Water Quality Control Board (RWQCB). Implementation of Mitigation measures MM HYD-1 (SWPPP or Erosion Control Plan Development and Implementation) and MM HM-1 (Hazardous Substance Control and Emergency Response) would ensure that erosion, sedimentation, or an accidental spill would not significantly affect water quality. With implementation of this mitigation, the Project's hydrology and water quality impacts are less than significant and are not considerable enough to represent a significant cumulative impact.

Land Use. The proposed Project would be consistent with the policies of the City General Plan. In addition, the proposed Project, as well as the cumulative projects, are required to minimize any impacts to state and federally listed species and/or habitats through compliance with CEQA, the federal ESA, the CESA, and/or applicable local habitat conservation plans. The Project would, therefore, not conflict with applicable land use policies and regulations and would not contribute to cumulative impacts to land use.

Mineral Resources. No commercial mineral resources are known to exist within the proposed Project site or vicinity. Therefore, the proposed Project would not result in the loss of availability of a known mineral resource. The Project would not contribute to potential cumulative impacts that may result in the loss of mineral resources.

Noise. The proposed Project is not expected to contribute to a long-term cumulative impact on ambient noise levels in the area. Noise from construction activities would be audible to nearby residents and businesses, but construction would be limited to daytime hours and would be short-term. The nearest sensitive receptors, residents, are located just over 100 feet from the proposed transmission line route at their nearest. It is assumed that the cumulative projects would also be constructed during daytime. There would be a limited potential for the projects to have overlapping construction schedules for an extended duration that could result in substantial levels of combined construction noise. These projects are not likely to combine with noise generated from the construction of the Project to create significant adverse effects since noise reduces rapidly with distance.

Population and Housing. The proposed Project would not result in impacts to population and housing. During its construction, the Project would provide short-term jobs for a small workforce. Construction workers would be contracted workers from the region. These jobs are not anticipated to result in workers relocating to the area. The Project would not displace any existing housing or people. The proposed Project, combined with the cumulative projects will have the potential to increase the population in the area due to increased job or housing opportunities. The proposed Project itself can facilitate future planned growth by ensuring a reliable and flexible electricity grid in the area. While the development of these

properties may induce some population growth, this has already been accounted for through the General Plan for the City. The NRS-KRS Project is proposed to increase system reliability and to serve planned growth in the area. The Project's population and housing impacts would be less than significant and are not considerable enough to represent a significant cumulative impact.

Public Services. The proposed Project would not interrupt fire or police protection services, schools, access to public parks, or other public facilities nor would it require the construction of new public service facilities. The completion of the projects in the vicinity may have the potential to also increase the demand for public services and public facilities, including schools, parks, and fire and police protection. However, impacts from the proposed Project on public services would be incremental and would not contribute to a cumulatively significant impact.

Recreation. Although some workers may use nearby park facilities during Project construction; increased use would be minimal and temporary and would not contribute substantially to the physical deterioration of existing facilities. The cumulative projects also have the potential to increase use of park facilities, but the increased use would also be minimal. The projects would have less than significant effects on recreation and would not contribute to cumulative effects associated with other projects.

Transportation. Construction would occur in a highly urbanized setting and would therefore create temporary impacts to traffic volumes, road hazards, and emergency access in the project area. Some road closures and/or one-way traffic controls would be required to allow for certain construction activities and to maintain public safety. While construction would create impacts, these impacts would be localized, temporary in nature, and would not change long-term traffic loads or patterns. Impacts due to traffic and temporary lane closures as a result of the construction of the proposed Project would be reduced to a less than significant level with implementation of mitigation measure MM T1 (Construction Traffic Control Plan) discussed in Section 5.17, Transportation and Traffic.

Impacts from the proposed Project, combined with construction of the cumulative projects would have the potential to cumulatively impact transportation and traffic in the surrounding area; however, the construction schedules of the Projects and that of the proposed Project would be variable. The potential for the planned and current projects in the vicinity to require lane closures simultaneously would be a remote possibility and would be limited in duration and location. Adherence to mitigation measure MM T-1 (Construction Traffic Control Plan) would ensure that the proposed Project's cumulative impacts to traffic and transportation would be incremental, short-term, and less than significant.

Tribal Cultural Resources. There are no known Tribal Cultural Resources (TCRs) listed in, or are known to be eligible for listing in, the California Register of Historical Resources (CRHR) or local register of historical resources within the proposed Project site or surrounding area. However, it is possible that previously unidentified TCRs that may be eligible for inclusion in the CRHR or local registers could be discovered and damaged, or destroyed, during ground disturbance, which would constitute a significant impact absent mitigation. Implementation of mitigation measure MM TCR-1 (Management of Unanticipated Tribal Cultural Resources), discussed in Section 5.18 (Tribal Cultural Resources), would ensure evaluation and protection of unanticipated TCR discoveries. Adherence to this mitigation measure would ensure that no tribal cultural resources would be affected during Project construction or during operation of the Project, and no contribution to cumulative impacts would occur.

Utilities and Service Systems. The construction of the proposed Project would generate minimal demand for water or wastewater treatment. Construction would require the disposal of a less than significant amount of all types of waste. No expanded utility facilities or services would be needed for the Project and use and disposal of all water and waste products would comply with all applicable laws and regulations. Operation and maintenance of the proposed Project would not require any demand for water or wastewater treatment. Therefore, a less than significant contribution to cumulative impacts to utilities and service systems would occur.

Wildfire. The construction of the Proposed Project would require temporary lane closures. The potential for the planned and current projects in the vicinity to require lane closures simultaneously would be a remote possibility and would be limited in duration and location. Implementation of MM T-1 (Construction Traffic Control Plan) would ensure that at least one lane of travel would remain open. Since the Proposed Project is not located in or near a very high fire hazard severity zone and is in an urban area with flat topography and low fuel load, the risk of wildfire is low. Furthermore, the Proposed Project would be unstaffed and would require only occasional maintenance with a small crew. The Proposed Project would be installing new electrical line equipment, which would reduce the risk of system failure due to aging equipment, which would reduce the cumulative fire risk for the area. Therefore, a less than significant contribution to cumulative impacts to wildfire would occur.

Corona and Induced Current Effects. None of the planned or current projects in the vicinity of the proposed Project would be sensitive to corona or induced current effects. The proposed Project will not contribute to a cumulative impact to corona and induced current effects.

(c) Does the project have environmental effects, which would cause substantial adverse effects on human beings, either directly or indirectly?

LESS THAN SIGNIFICANT WITH MITIGATION. The proposed Project would not substantially adversely affect human beings directly or indirectly. The Initial Study identified no environmental effects that would cause substantial adverse effects on human beings. Adverse effects would be mitigated by implementation of mitigation measures and, in most instances, would be short-term construction period impacts. Each type of impact with the potential to cause substantial adverse effects on human beings has been evaluated, and this Initial Study concludes that all of these potential impacts are either less than significant or can be mitigated to a less than significant level with the implementation of measures presented herein. (See Section 6, Mitigation Monitoring and Reporting Program, for a complete listing of the mitigation measures.) Therefore, the proposed Project does not involve any activities, either during construction or operation, which would cause significant adverse effects on human beings that cannot be readily mitigated to a less than significant level. The proposed operation and maintenance activities would be the same as current operation and maintenance practices for the existing substations and existing SVP transmission lines, which have minimal impacts on human beings. The potential beneficial effects of the project include improving the reliability and capacity of the existing transmission system in the City.

6. MITIGATION MONITORING PLAN

This Mitigation Monitoring and Reporting Program (MMRP) will be used by the City of Santa Clara and SVP to ensure that the mitigation measures adopted as a condition of project approval are implemented. The MMRP is consistent with CEQA Guidelines (Sections 15074(d), 15091(d), and 15097) for the implementation of mitigation.

SVP will be responsible for monitoring the implementation of the mitigation measures presented in Table 6-1. SVP will designate specific personnel to implement and document all aspects of the MMRP. SVP will ensure that the designated personnel have authority to enforce mitigation requirements and will be capable of terminating Project construction activities found to be inconsistent with mitigation objectives. Additionally, SVP will be responsible for ensuring that construction personnel understand their responsibility to adhere to the MMRP requirements and other contractual requirements related to the implementation of mitigation.

Table 6-1. Mitigation Monitoring Plan

Impact	Mitigation Measure	Monitoring Requirement	Timing of Action
Air Quality			
Construction-Phase Air Quality	**MM AQ-1. Implement Basic Construction Air Quality Mitigation.** The Project shall ensure that basic construction emissions control measures are implemented as "Best Management Practices," as follows: ▪ All exposed soil surfaces (e.g., parking areas, staging areas, soil piles, and graded areas) shall be watered two times per day. ▪ All haul trucks transporting soil, sand, or other loose material off-site shall be covered. ▪ All visible mud or dirt track-out onto adjacent public roads shall be removed using wet power vacuum street sweepers at least once per day. The use of dry power sweeping is prohibited. ▪ All areas to be paved shall be completed as soon as possible. Foundation pads shall be laid as soon as possible after grading. ▪ Idling times shall be minimized either by shutting equipment off when not in use or reducing the maximum idling time to 5 minutes (as required by the California airborne toxics control measure Title 13, Section 2485 of California Code of Regulations [CCR]). Clear signage regarding idling shall be provided for construction workers at all access points. ▪ All construction equipment shall be maintained and properly tuned in accordance with manufacturer's specifications. All equipment shall be checked by a certified mechanic and determined to be running in proper condition prior to operation. ▪ Post a publicly visible sign with the telephone number and person to contact at SVP regarding dust complaints. This person shall respond and take corrective action within 48 hours. The BAAQMD's phone number shall also be visible to ensure compliance with applicable regulations.	Emissions from construction equipment exhaust are reduced	During construction
Biological Resources			
Special Status Wildlife Species	**MM BIO-1. Implement Worker Environmental Awareness Program**. Prior to and for the duration of any vegetation removal and trimming and any ground disturbing activities, SVP or its designee shall provide Worker Environmental Awareness Program (WEAP) training to all new personnel prior to beginning work on the Project. The training may be presented in the form of a video. The training program shall be developed by a qualified biologist to educate Project personnel about the Project's sensitive biological resources. The name and credentials of the qualified biologist shall be submitted to the City no less than 14 days prior to the surveys for review and approval. A draft of the training program (i.e., video and written materials) shall be submitted to the City no less than 14 days prior for approval prior to implementation. The WEAP shall include, at a minimum:	Monitor implementation of specified biological monitor activities	Prior to and during construction
Special Status Wildlife Species	**MM BIO-2. Biological Monitoring.** SVP or its designee shall retain a qualified biologist as biological monitor on the Project, to be approved by the City. If sensitive biological resources are identified during preconstruction surveys or incidentally, the qualified biologist will monitor Project work locations in proximity to sensitive biological resources weekly until biological resources are not found for one consecutive month, at which point weekly monitoring will cease. The qualified biologist shall be notified immediately if any nesting birds or other biological resources are discovered once construction begins. The qualified	Monitor sensitive biological resources if identified during preconstruction survey	Prior to and during construction

Impact	Mitigation Measure	Monitoring Requirement	Timing of Action
	biologist will be the point of contact for any employee or contractor who might inadvertently kill or injure a special-status species or anyone who finds a dead, injured, or entrapped animal. The qualified biologist or biological monitor shall have the authority and responsibility to halt any Project activities that are not in compliance with applicable mitigation measures, permit conditions, or other Project requirements, or will have an unauthorized adverse effect on biological resources.		
Special Status Wildlife Species	**MM BIO-3. Conduct Preconstruction Surveys for Special-Status Wildlife and Implement Avoidance Measures.** A qualified biologist shall conduct a preconstruction survey for each of the species identified below. These surveys can be combined if they meet the requirements outlined in this measure. The name and credentials of the qualified biologist shall be submitted to the City no less than 14 days prior to the surveys for review and approval. Within 14 days of completion of the surveys, the City shall be provided with a report describing the findings, including the date, time, and duration of the surveys; identity of the surveyor(s); a list of all common and special-status species observed; locations of any special-status species identified, including any established avoidance buffers; and any actions taken at the direction of the City in coordination with CDFW, and/or USFWS. <u>Bumble Bee:</u> A preconstruction survey for Crotch's bumble bee and western bumble bee shall be conducted during the colony active period for each species (April through August) prior to project vegetation management and ground disturbing activities. The survey shall be conducted by a qualified entomologist or biologist familiar with the life history and ecology of special-status bumble bee species. The preconstruction survey for special-status bumble bees shall focus on the ruderal habitat within the utility right-of-way adjacent to the Northern Receiving Station and landscaped and ruderal land at the Montague Expressway interchange. The survey shall identify any potential foraging, nesting, and/or overwintering resources present within the Project work areas and a 50-foot buffer where legal access is available. If a potential active special-status bumble bee nest site is identified, a 50-foot avoidance buffer shall be clearly delineated with staking, flagging, and/or signage and Project activities will be prohibited from the area until it is determined that the nest is no longer potentially active. The qualified biologist shall notify the City for coordination with CDFW within 24 hours as further coordination may be required to avoid or mitigate impacts. <u>Burrowing Owl.</u> No later than seven days prior to start of project vegetation management and ground disturbing activities, a qualified biologist shall conduct a preconstruction survey for burrowing owl. The survey shall include the focus areas (described below) plus a 250-foot buffer where legal access is available. The survey for burrowing owl shall focus on the ruderal habitat described for bumble bees above. If burrows or other structures are identified that contain signs of use by burrowing owl, or if burrowing owl(s) is observed, an avoidance buffer area shall be clearly delineated with staking, flagging, and/or signage. If during the nesting season (February 1 to August 31), a 250-foot avoidance buffer shall be established, and Project activities will be prohibited from the area until a qualified biologist determines it is occupied either by a non-mated pair or the young have fledged. If outside the nesting season, a 160-foot avoidance buffer shall be established. The prescribed buffers may be adjusted by the qualified avian biologist in coordination with the City and CDFW based on existing conditions around the burrow, planned construction activities, tolerance of the species at a given location, and other pertinent factors. If avoidance of burrowing owls is not feasible and work will be conducted outside the nesting season, a Burrowing Owl Passive Relocation Plan shall be developed to provide detailed methods and guidance for passive relocation of burrowing owls. The Burrowing Owl Passive Relocation Plan shall be submitted to	Monitor implementation of specified biological monitor activities and implement avoidance measures	Prior to and during construction

Impact	Mitigation Measure	Monitoring Requirement	Timing of Action
	the City for approval in coordination with CDFW prior to conducting passive relocation. An occupied burrow may not be disturbed during the nesting season, unless a qualified biologist determines, by non-invasive methods, that it is not occupied by a mated pair. Passive relocation would include installation of one-way doors on burrow entrances that would let owls out of the burrow but would not let them back in. Once owls have been passively relocated, burrows will be carefully excavated by hand and collapsed by, or under the direct supervision, of a qualified biologist. Within 14 days of completion of the surveys, the City shall be provided with a report describing the findings, including the date, time, and duration of the surveys; identity of the surveyor(s); any established avoidance buffers in the event burrowing owls are documented to be present; and any actions taken at the direction of the City and/or CDFW. Western Pond Turtle: No later than seven days prior to start of project vegetation management and ground disturbing activities, a qualified biologist shall conduct a preconstruction survey for western pond turtle. The survey for western pond turtle shall focus on the ruderal habitat within the utility right-of-way southeast adjacent to the Northern Receiving Station. Western pond turtle or other special-status wildlife found within the Project site during the surveys shall be allowed to leave on its own volition prior to the onset of construction. If species of special concern are found within the Project site during surveys and will not leave on its own volition, the species will be relocated to the nearest suitable habitat outside of the Project site. Species of special concern will only be handled by qualified personnel as authorized by CDFW and/or USFWS under an issued state scientific collecting permit (SCP), memorandum of understanding (MOU), or federal recovery permit. Impacts to federally or state-listed species or state-listing candidate species are not authorized. If any State or federally listed, candidate, or proposed species are detected work will be stopped and the applicant shall notify the City for coordination with CDFW and or USFWS, within 24-hours for further direction.		
Special Status Wildlife Species	**MM BIO-4. Preconstruction Nesting Bird Surveys and Nest Protection.** ~~During the nesting season (February 1 to August 31)~~ If Project-related work is scheduled during the nesting season (typically February 15 to August 30 for small bird species such as passerines; January 15 to September 15 for owls; and February 15 to September 15 for other raptors), preconstruction nesting bird surveys shall be conducted on the site and vicinity by a qualified biologist no more than 7 days before any work activities, including any vegetation removal or trimming, are performed at a given Project location. The surveys shall be conducted following the sequential schedule of the linear Project in a manner that minimizes potential for the surveys to expire before the construction crews proceed to a new Project work location. The survey radii surrounding the work area shall be 250 feet for passerines and 500 feet for raptors. Surveyors will search for all potential nest types (e.g., ground, cavity, shrub/tree, structural, etc.) and determine whether the nest is active. A nest will be determined to be active if eggs or young are present in the nest. Upon discovery of active nests, the biological monitor will determine if there is need for a buffer or shield to minimize disturbance of the nest. Upon this determination and execution of any required minimization action, work may proceed. The extent of the determination will be based upon: acclimation of the species or individual to disturbance, nest type (cavity, tree, ground, etc.), and level and duration of construction activity. If there is a break in construction at a work location for a period of 14 or more days during nesting season, a new nesting bird survey shall be undertaken before construction is allowed to commence at that location to determine if any nests have been established. Bird surveys are not required outside of the nesting season.	Monitor implementation of measures to protect nesting bids	During nesting season; prior to and during construction

Impact	Mitigation Measure	Monitoring Requirement	Timing of Action
	In the unlikely event a special-status or listed species is found nesting nearby, CDFW and USFWS will be notified, and the City will be provided with nest survey results, if requested. When active nests are identified, monitoring for significant disturbance to the birds will be implemented. Construction will not be allowed to continue unless the qualified biologist determines that no disturbance is occurring.		
Special Status Wildlife Species	**MM BIO-5. Preconstruction Bat Survey and Implement Avoidance Measures.** A qualified biologist shall conduct surveys for special-status bats during the appropriate time of day to maximize detectability to determine if bat species are roosting in trees or other vegetation requiring removal or clearance pruning for the Project. The name and credentials of the qualified biologist shall be submitted to the City no less than 14 days prior to the surveys for review and approval. The survey shall occur no less than 7 days and no more than 14 days prior to beginning tree or other vegetation removal or trimming activities. Survey methodology may include visual surveys for bats (e.g., observation of bats emerging from roosts to forage), inspection for suitable roost habitat, bat sign (e.g, guano), or use of ultrasonic detectors (e.g., Anabat, etc). Visual surveys shall include all trees or other vegetation requiring removal or clearance pruning for the Project. If evidence of bat use is observed, the approximate number and species of bats using the roost shall be determined. Bat detectors may be used to supplement survey efforts. If roosts or a maternity colony are determined to be present, then a Bat Mitigation and Monitoring Plan (Plan) shall be prepared and implemented to mitigate for the loss of roosting habitat. The Plan shall include information pertaining to the species of bat and location of the roost, exclusion methods and roost removal procedures, compensatory mitigation for permanent impacts (including specific mitigation ratios and location of proposed mitigation) and monitoring to assess bat use of mitigation areas. This Plan shall be submitted to the City and CDFW for review and approval prior to project activities that could disturb roosting bats.	Monitor implementation of bat survey and avoidance measures	Prior to and during construction
Compliance with Local Tree Policies and Ordinances	**MM BIO-6. Tree Protection Measures for Retained Trees.** To minimize the potential damage and ensure the long-term health, stability, and survival of retained trees, measures outlined in the Tree Protection Plan below shall be implemented: <u>Tree Protection Zone</u> ▪ A Tree Protection Zone (TPZ) shall be defined by the City Arborist or City designated ISA Certified Arborist for all trees within 50 feet of any excavations that could be affected by project activities and are intended for preservation. A TPZ will not be established for trees within the Project area that are not within this excavation zone. TPZ will be taken down once excavation work is completed within 50 feet. A TPZ will typically include all area within the dripline of trees to be retained. ▪ The TPZ will be protected by a fenced enclosure to prevent unauthorized access during project activities. Fencing shall be constructed of sturdy but open material (i.e., orange webbed construction fencing, chain-link) with a minimum height of 4 feet and secured in place. Warning signs (e.g. WARNING – Tree Protection Zone – This fence shall not be moved without approval by the City Arborist or a City designated arborist) shall be prominently displayed and visible from all sides of the TPZ fencing. ▪ TPZ fencing shall be installed prior to any demolition, grading, staging, stockpiling, or any other construction activities, and shall remain in place until all construction activities are complete.	Monitor implementation of tree protection measures	Prior to and during construction

Impact	Mitigation Measure	Monitoring Requirement	Timing of Action
	■ No construction, staging, or storage of materials, equipment or vehicles shall occur within the TPZ without advanced approval and oversight by the City Arborist or a City designated ISA Certified Arborist. ■ No excess soil, excess concrete or concrete wash, chemicals, refuse or other waste shall be placed within the TPZ. ■ The primary contractor shall be responsible for maintaining TPZ fencing and enforcing all TPZ guidelines outlined above throughout the course of the Project. <u>Site Grading, Excavation, and Trenching</u> ■ Soil disturbance or grade changes within a TPZ are not permitted unless approved by the City Arborist or a City designated arborist. Any approved grading, excavation or trench work within a TPZ will be field staked and inspected by the City Arborist or a City designated ISA Certified Arborist prior to implementation. ■ All grading, excavation and trenching work within a TPZ shall be performed under the observation of a City Arborist or City designated ISA Certified Arborist. ■ All grading shall be designed to provide positive drainage away from the base of trees to be preserved and shall not create ponding within a TPZ. ■ Grade changes in the vicinity of trees to be preserved should remain as close to natural grade as possible. <u>Canopy Pruning</u> ■ To the extent possible, any necessary canopy pruning shall be completed prior to the commencement of construction activities. ■ Pruning shall be performed by a qualified tree service worker under the direction of a ISA Certified Arborist following International Society of Arboriculture tree pruning best management practices. Pruning shall not be performed by construction personnel. <u>Root Pruning</u> ■ Any roots one inch and larger requiring removal shall be cut cleanly in sound tissue. No pruning seals or paint shall be used on wounds. ■ Roots two inches and greater shall remain in place and undamaged to the extent practicable. If removal is required, cuts shall be made with the approval and under the direction of an ISA Certified Arborist. <u>Communication for Tree Protection Compliance</u> ■ A preconstruction meeting shall be arranged for the City Arborist or City designated ISA Certified Arborist to meet with the Project Planner, Project Contractors, Onsite Project Supervisors, Tree Pruning and Removal Contractor, and/or other appropriate Project Leads to review and secure a commitment to comply with all tree protection measures.		

Impact	Mitigation Measure	Monitoring Requirement	Timing of Action
Cultural Resources			
Unanticipated Discoveries of Historical Resources or Unique Archaeological Resources	**MM CR-1. Worker Training and Management of Unanticipated Discoveries of Historical Resources, Unique Archaeological Resources.** SVP shall conduct a worker environmental awareness program (WEAP) for Project personnel who, during the course of Project work, might encounter or alter historical resources or important/unique archaeological materials. This program may be combined with any similar required program, such as for biological resources. The WEAP may include a kickoff tailgate session that describes how to identify cultural resources and what to do if an unanticipated discovery is made during construction, presents site avoidance requirements and procedures to be followed if unanticipated cultural resources are discovered during Project construction, and includes a discussion of disciplinary and other actions that could be taken against persons violating historic preservation laws and SVP policies. If previously unidentified cultural resources are identified during construction, construction work within 100 feet of the find shall be halted and directed away from the discovery until a Secretary of the Interior qualified archaeologist assesses the significance of the resource. The archaeologist, in consultation with the City of Santa Clara, State Historic Preservation Officer, any interested Tribes, and any other responsible public agency, shall make the necessary plans for treatment of the find(s) and for the evaluation and mitigation of impacts if the finds are found to be eligible to the National or California Registers, qualify as a unique archaeological resource under California Environmental Quality Act Section 21083.2, or are determined to be tribal cultural resource as defined in Section 21074.	Review and attend worker environmental awareness program; Monitor implementation of unanticipated discovery protocols	Prior to construction and during construction
Unanticipated Discoveries of Human Remains	**MM CR-2. Treatment of Human Remains.** Any human remains discovered are to be treated with respect and dignity. Upon discovery of human remains, all work within 50 feet of the discovery area must cease immediately, nothing is to be disturbed, and the area must be secured. The Santa Clara County Coroner's Office must be called. The Coroner has two working days to examine the remains after notification. The appropriate land manager/owner of the site is to be called and informed of the discovery. If the remains are located on federal lands, federal land managers, federal law enforcement, and the federal archaeologist must be informed as well, due to complementary jurisdiction issues. It is very important that the suspected remains, and the area around them, are undisturbed and the proper authorities called to the scene as soon as possible, as it could be a crime scene. The Coroner will determine if the remains are archaeological/ historic or of modern origin and if there are any criminal or jurisdictional questions. After the Coroner has determined the remains are archaeological/historic-era, the Coroner will make recommendations concerning the treatment and disposition of the remains to the person responsible for the excavation, or to his or her authorized representative. If the Coroner believes the remains to be those of a Native American, he/she shall contact the Native American Heritage Commission (NAHC) by telephone within 24 hours. The NAHC will immediately notify the person it believes to be the most likely descendant (MLD) of the remains. The MLD has 48 hours to make recommendations to the landowner for treatment or disposition of the human remains. If the descendant does not make recommendations within 48 hours, the landowner shall reinter the remains in an area of the property secure from further disturbance. If the landowner does not accept the descendant's recommendations, the owner or the descendant may request mediation by NAHC. According to the California Health and Safety Code, six (6) or more human burials at one (1) location constitute a cemetery (Section 8100), and willful disturbance of human remains is a felony (Section 7052).	Monitor implementation of human remain discovery protocols	During construction

Impact	Mitigation Measure	Monitoring Requirement	Timing of Action
Geology and Soils			
Geologic and Seismic Hazards	**MM G-1. Conduct Geotechnical Investigations.** Because seismically induced liquefaction-related ground failure has the potential to damage or destroy Project components, SVP shall cause design-level geotechnical investigation for the Project to be performed that shall include investigations designed to assess the potential for geologic and seismic hazards, and specifically include evaluation of the potential for liquefaction and expansive soils to affect the 115 kV line structures. Where liquefaction or expansive soils hazards are found to exist/verified, appropriate engineering design and construction measures shall be incorporated into the Project design as deemed appropriate by the Project engineer. Finalized Project design incorporating geotechnical recommendations shall be submitted to the City 60 days prior to Project construction.	Ensure a design-level geotechnical investigation is performed	At least 60 days before final Project design
Unanticipated Discoveries of Paleontological Resources	**MM G-2. Worker Training and Management of Paleontological Resources.** A paleontologist must be retained who meets the professional paleontologist qualifications (Society of Vertebrate Paleontology's Standard Procedures, 2010) and has demonstrated experience in carrying paleontological projects to completion. The qualified professional paleontologist shall prepare a Worker Environmental Awareness Program (WEAP) for potentially encountered paleontological resources, and training shall be provided for all staff who will be onsite during excavations. The WEAP shall show what local Pleistocene fossils look like in general, where they may appear in the Project, and how to proceed should material suspected to be a fossil is encountered. The WEAP shall include procedures to follow if paleontological resources are encountered, including: ▪ A monitoring plan for soils generated from tubular pole foundation excavations that may encounter Pleistocene sediments. Workers may temporarily halt operations to allow for identification and collection of paleontological resources from soil spoil piles. If a potential significant paleontological resource is noted, a qualified paleontologist or paleontological monitor shall be called to the site identify and collect the fossil. ▪ A plan for treatment of significant fossils that provides for the treatment of specimens to the point of identification and permanent preservation, including washing of sediments to recover small invertebrates and vertebrates. ▪ A specimen identification, analysis, and curation plan that includes identification to the lowest taxonomic level possible; taxonomic, taphonomic, and biostratigraphic analysis; and curation to the standards of the repository where they will be curated. ▪ Paleontological resource collection treatment, and identification shall meet standards set forth in the Society of Vertebrate Paleontology (2010).	Review Paleontological Resource Monitoring Program; Monitor implementation of Program	Prior to construction and during construction
Hazards and Hazardous Materials			
Hazardous Substances Control	**MM H-1 Hazardous Substance Control and Emergency Response.** SVP shall implement its hazardous substance control and emergency response. procedures as needed. These procedures identify methods and techniques to minimize the exposure of the public and site workers to potentially hazardous materials during all phases of Project construction through operation. They address worker training appropriate to the site worker's role in hazardous substance control and emergency response. The procedures also require implementing appropriate control methods and approved containment and spill-control practices for construction and materials stored on site. If it is necessary to store chemicals on site, they shall be	Collect and analyze soil samples and, if contamination is discovered, ensure that construction activities are conducted according to	Prior to construction and during construction

Impact	Mitigation Measure	Monitoring Requirement	Timing of Action
	managed in accordance with all applicable regulations. Material safety data sheets shall be maintained and kept available on site, as applicable. All hazardous materials and hazardous wastes shall be handled, stored, and disposed of in accordance with all applicable regulations, by personnel qualified to handle hazardous materials. The hazardous substance control and emergency response procedures include, but are not limited to, the following: ▪ Proper disposal of potentially contaminated soils resulting from leaks or spills. ▪ Establishing site-specific buffers for construction vehicles and equipment located near sensitive resources. ▪ Emergency response and reporting procedures to address hazardous material spills. ▪ Stopping work at that location and contacting the City Fire Department Hazardous Materials Division immediately if visual contamination or chemical odors are detected. Work will be resumed at this location after any necessary consultation and approval by the Hazardous Materials Division. ▪ SVP shall complete its Emergency Action Plan Form as part of Project tailboard meetings. The purpose of the form is to gather emergency contact numbers, identify first aid locations and provide other tailboard safety information.	SVP's hazardous substance control and emergency response procedures	
Contaminated Soil and Groundwater	**MM H-2 Soil and Groundwater Management.** Prior to Project construction and ground disturbing activities, SVP shall implement an evaluation of potential soil and groundwater contamination at locations along the Project route where excavation, drilling, auguring, or other significant ground disturbance will occur to prevent mobilization of contaminants and exposure of workers and the public. The evaluation shall be completed at least 60 days prior to the start of Project construction. The evaluation of soil and groundwater shall include, but not be limited to, the following: ▪ If contaminants below regulatory screening levels are identified, SVP shall coordinate with SCCDEH regarding soil reuse guidelines; ▪ If contaminants exceeding applicable regulatory screening levels for construction workers and residential users published by the RWQCB, DTSC, or the Environmental Protection Agency (EPA) (except for arsenic which is naturally occurring in the area), are encountered during the Soil and Groundwater Characterization Study SVP shall obtain regulatory oversight from SCCDEH and shall prepare a Soil and Groundwater Management Plan (SGMP); and ▪ Soils found in concentrations above established thresholds (except for arsenic) shall be removed and disposed of according to California Hazardous Waste Regulations. If a SGMP is needed, the SGMP shall be prepared to guide activities during excavation and other ground disturbing activities to ensure that identified contaminated soils or groundwater are handled, removed, and disposed of properly. The SGMP shall be prepared by a licensed qualified professional and submitted to SCCDEH at least 30 days prior to Project construction and shall include, but not be limited to, the following elements: ▪ Procedures and protocols for the safe handling, storage, stockpiling, and disposal of contaminated soils; ▪ Contaminated soil excavated from the site shall be hauled off-site and disposed of at a licensed hazardous materials disposal site;	Evaluate potential soil and groundwater contamination, if present, prepare and implement a Soil and Groundwater Management Plan	Prior to and during construction

Impact	Mitigation Measure	Monitoring Requirement	Timing of Action
	▪ Protocols to manage and dispose of contaminated groundwater that may be encountered during trenching or subsurface excavation activities, and if dewatering is required; and ▪ Procedures and protocols to follow in the event soils or groundwater not previously identified as contaminated and suspected of being contaminated (on the basis of visual, olfactory, or other evidence) are identified during site grading or excavation activities or dewatering activities to allow for proper identification and characterization, and subsequent proper handling, removal, and disposal.		
Hydrology and Water Quality			
Water Quality	**MM HYD-1. SWPPP or Erosion Control Plan Development and Implementation.** Following Project approval, SVP will prepare and implement a SWPPP, if required by State law, or erosion control plan to minimize construction impacts on surface water and groundwater quality. Implementation of the SWPPP or erosion control plan will help stabilize graded or disturbed areas and reduce erosion and sedimentation. The plan will designate BMPs that will be adhered to during construction activities. Erosion and sediment control measures, such as straw wattles, covers, and silt fences, may be installed before the onset of winter rains or any anticipated storm events if soils are not stabilized. Suitable stabilization measures will be used to protect exposed areas during construction activities, as necessary. During construction activities measures will be in place to prevent contaminant discharge. The Project SWPPP or erosion control plan will include erosion control and sediment trans-port BMPs to be used during construction. BMPs, where applicable, will be designed by using specific criteria from recognized BMP design guidance manuals. Erosion-minimizing efforts may include measures such as properly containing stockpiled soils. Erosion control measures identified will be installed in an area before construction begins during the wet season and before the onset of winter rains or any anticipated storm events. Temporary measures such as silt fences or wattles, intended to minimize sediment transport from temporarily disturbed areas, will remain in place until disturbed areas have stabilized. The plan will be updated during construction as required by the SWRCB. A worker education program shall be established for all field personnel prior to initiating fieldwork to provide training in the appropriate application and construction of erosion and sediment control measures contained in the SWPPP. This education program will also discuss appropriate hazardous materials management and spill response. Compliance with these requirements will be ensured by the on-site construction contractor.	Ensure a SWPPP is prepared and implemented, or if a SWPPP is not required, ensure that an erosion control plan is developed and implemented to minimize construction impacts on surface water and groundwater quality	Prior to and during construction
Transportation			
Construction Traffic Control	**MM T-1. Construction Traffic Control Plan.** Prior to the start of construction, SVP or its designee shall prepare and submit an Encroachment Permit which will include the construction Traffic Control Plan for review and approval to the City's Department of Public Works for public roads and transportation facilities that would be directly affected by the construction activities and/or would require permits and approvals. SVP shall submit the construction Traffic Control Plan to the City prior to conducting activities covered in the traffic control permits. The construction Traffic Control Plan shall include, but not be limited to: ▪ The locations and use of flaggers, warning signs, lights, barricades, delineators, cones, arrow boards, etc., according to standard guidelines outlined in the Manual on Uniform Traffic Control Devices, the	Ensure that a Construction Traffic Control Plan is submitted by SVP and approved by the City of Santa Clara	Prior to construction

Impact	Mitigation Measure	Monitoring Requirement	Timing of Action
	Standard Specifications for Public Works Construction, and/or the California Joint Utility Traffic Control Manual. ▪ Additional methods to reduce temporary traffic delays and trips during peak travel hours to the extent feasible. ▪ Typical access routes between all staging areas and the proposed work areas. ▪ Defining methods to coordinate with the City throughout construction to minimize cumulative lane disruption impacts should simultaneous construction projects affect shared segments/portions of the circulation system. ▪ Prior to the start of construction, provide (or identify the timing to provide) the City with methods to comply with all specified requirements. ▪ Plans to coordinate in advance with emergency service providers to avoid restricting the movements of emergency vehicles. Police departments and fire departments shall be notified in advance by SVP of the proposed locations, nature, timing, and duration of any roadway disruptions, and shall be advised of any access restrictions that could impact their effectiveness. At locations where roads will be blocked, provisions shall be ready at all times to accommodate emergency vehicles, such as immediately stopping work for emergency vehicle passage, providing short detours, and developing alternate routes in conjunction with the public agencies. Documentation of the coordination with police and fire departments shall be gathered prior to the start of construction. ▪ Plans to coordinate in advance with property owners, if any, that may have limited access to properties due to temporary lane closures. Provisions for ensuring secondary access should be provided. ▪ Plans to coordinate with Valley Transportation Authority in advance of construction to minimize disruption to mass transit.		
Tribal Cultural Resources			
Unanticipated Tribal Cultural Resources	**MM TCR-1. Management of Unanticipated Tribal Cultural Resources**. During project construction, should subsurface tribal cultural resources be discovered, all activity in the vicinity of the find shall stop and a qualified archaeologist and an authorized tribal representative shall be contacted to assess the significance of the find according to CEQA Guidelines Section 15064.5 and Section 21074. If any find is determined to be significant, the archaeologist shall determine, in consultation with the implementing agency and any local Native American groups expressing interest, appropriate avoidance measures or other appropriate mitigation. Per CEQA Guidelines Section 15126.4(b)(3), preservation in place shall be the preferred means to avoid impacts to tribal cultural resources. Methods of avoidance may include, but shall not be limited to, Project reroute or redesign, or identification of protection measures such as capping or fencing. Consistent with CEQA Guidelines Section 15126.4(b)(3)(C), if it is demonstrated that resources cannot be avoided, the qualified archaeologist shall develop additional treatment measures, such as data recovery or other appropriate measures, in consultation with the implementing agency and any local Native American representatives expressing interest in the tribal cultural resource.	Confirm that all activity in the vicinity of a found subsurface tribal cultural resource is ceased and that an authorized tribal representative is contacted	During construction

7. RESPONSE TO COMMENTS

7.1. Introduction to Comments and Responses Section

The Final IS/MND includes the NRS-KRS 115 kV Transmission Line Project (Project) Draft IS/MND as revised, comments received on the Draft IS/MND, and responses to those comments.

This document has been prepared in accordance with California Environmental Quality Act (CEQA) as amended (Public Resources Code Section 21000 et seq.) and the Guidelines for Implementation of the California Environmental Quality Act (State CEQA Guidelines) (Cal. Code Regs., tit. 14, § 15000 et seq.)

Although State CEQA Guidelines Section 15088 does not require a Lead Agency to prepare written responses to comments received on a Draft IS/MND, the City and SVP have elected to prepare the following written responses with the intent of providing a comprehensive and meaningful evaluation of the proposed Project.

This section summarizes and responds to the comments received during the public review period, which occurred from July 31 to August 30, 2024. This section also provides general responses to common comments.

7.2. Summary of Comments Received

Table 7-1 lists the Public Agencies, Groups, Organizations, and Individuals that submitted comments on the Draft IS/MND. The individual comments were numbered and are included in Appendix H, Public Comments on Draft IS/MND. This section summarizes the concerns in each comment and responds to them. It is important to note that only the substantive comments raised on the merits of the environmental analysis are identified, numbered, and responded to, while comments such as those related to the commenter's interest in or opinions about the project, or a summary of the project itself were noted but not included.

If revisions were made to the IS/MND based on the comments, the revisions are summarized with the response to the specific comment and are indicated in the text of this Final IS/MND with ~~strikeout~~ for deletions of text, and in <u>underline</u> for new text.

Table 7-1. Comments Received on the Draft IS/MND

Commenter	Date of Comment	Comment #
A: Public Agencies, Groups, and Organizations		
California Department of Fish and Wildlife (CDFW)	8/29/24	A1
SFPUC Water Enterprise	8/26/24	A2
San Jose International Airport	7/24/24	A3
California Department of Transportation (Caltrans)	8/29/24	A4
B: Individuals		
Kanupriya Kabra	8/29/24	B1
Harsha Priya	8/29/24	B2
Aadya Shrotriya	8/29/24	B3
Jigisha Shukla	8/29/24	B4
Jigisha Shukla #2	8/29/24	B5
Praveen Vutukuru and Vijaya Chaganti	8/29/24	B6
Sudhir Kulkarni	8/29/24	B7

Commenter	Date of Comment	Comment #
Rajesh Upalekar	8/29/24	B8
Amit Chandak	8/30/24	B9
Neelam z.dabholkar	8/30/24	B10
Aman Sharma	8/30/24	B11
Aruna Pothukuchi	8/31/24	B12
Fang Gong	8/3/24	B13
Sriharish Pisipati	8/30/24	B14
Saurabh Sharma	8/30/24	B15
Saurabh Sharma #2	8/30/24	B16
Prithvi Arun	8/30/24	B17
Vishnu Hari	8/30/24	B18
Sathiya Narayanan	8/30/24	B19
Unnikrishnan Udinoor	8/30/24	B20
Sweety h	8/30/24	B21
Simple Yadav	8/30/24	B22
Niaz Khan	8/30/24	B23
Kuldeep Singh	8/30/24	B24
Paddy Subbian	8/30/24	B25
Anjana Batchu	8/30/24	B26
Anjana Batchu #2	8/30/24	B27
Amit Chandak #2	8/30/24	B28
Amit Chandak #3	8/30/24	B29
Candida Bayross	8/30/24	B30
Johny Rufus	8/30/24	B31
Mehul Suresh Jain	8/30/24	B32
Priyadarshini Vijayakumar	8/30/24	B33
Manojkumar Mohanram	8/30/24	B34
Anupama Lolage-Baheti	8/30/24	B35
Vijay Srinivasan	8/30/24	B36
Lini Kuriyan	8/30/24	B37
Olivier Madec	8/29/24	B38
Suneet Bisht	8/30/24	B39
Manjunath Jagannatharao	8/30/24	B40
Phani Shankar Pandravada	8/30/24	B41
Harini Tadinada	8/30/24	B42
Shankar Pandravada #2	8/30/24	B43
Vishaka Sutrave	8/30/24	B44
Jerin	8/30/24	B45
Punnya Ann Joy	8/30/24	B46
Manali Desai	8/30/24	B47
SriVidya Chavali	8/30/24	B48

Commenter	Date of Comment	Comment #
Hima Sree MC	8/30/24	B49
Lakshmikanth Chowdary Pothula	8/30/24	B50
Sith Thuon	8/29/24	B51
Cipson Jose	8/29/24	B52
Om Shankar	8/29/24	B53
Om Shankar #2	8/29/24	B54
Amit Thakkar	8/29/24	B55
Lenny Le	8/29/24	B56
Srinivas Dangeti	8/29/24	B57
Venkat Patchigolla	8/29/24	B58
Aparna Raman	8/29/24	B59
Gayathiri Lakshmanan	8/29/24	B60
Prashant Tiwari	8/29/24	B61
Srinivas Reddy	8/29/24	B62
Gane Sugali	8/29/24	B63
Adnan Hemani	8/29/24	B64
Darshna Siva	8/29/24	B65
Vinay Iyer	8/29/24	B66
Preetika Tiwari	8/28/24	B67
Kanupriya Kabra #2	8/28/24	B68
Ruchika Sarna	8/27/24	B69
Ruchika Sarna #2	8/28/24	B70
Yuri Kleban	8/27/24	B71
Sir Yuri	8/27/24	B72
Derek Fong	8/27/24	B73
Jeff Holmbeck	8/12/24	B74

7.3. General Responses to Common Comments

This section presents detailed responses to comments that were made by multiple commenters. General Responses (GR) address the following topics:

- GR #1 – Human Health and Scope of CEQA
- GR #2 – Electromagnetic Fields (EMF)
- GR #3 – Corona and Induced Currents
- GR #4 – Property Values and Cost
- GR #5 – Aesthetics
- GR #6 – Noise
- GR #7 – Hazards

7.3.1. General Response #1 – Human Health and Scope of CEQA

During the Public Comment Period, SVP hosted a Public Engagement Meeting on August 22. This meeting was attended by approximately one dozen community members, who expressed their concerns about the Project's potential impact on human health. The commentors cited a list of State reviewing agencies and

stated that none of the agencies listed have an association with human health. Commentors stated that CEQA reporting is not qualified enough regarding human health concerns, and recommended that other agencies, who are qualified to study "humans" should be involved in reviewing the proposal. Commentors stated that a third party or independent study should be completed in favor of human health.

CEQA analyses are guided by the CEQA Guidelines, which are defined as:

> *The CEQA Guidelines (Title 14, Division 6, Chapter 3 of the California Code of Regulations) are administrative regulations governing implementation of the California Environmental Quality Act. The CEQA Guidelines reflect the requirements set forth in the Public Resources Code, as well as court decisions interpreting the statute and practical planning considerations. Among other things, the CEQA Guidelines explain how to determine whether an activity is subject to environmental review, what steps are involved in the environmental review process, and the required content of environmental documents. The CEQA Guidelines apply to public agencies throughout the state, including local governments, special districts, and State agencies (OPR, 2024).*

The IS/MND was prepared pursuant to the CEQA Guidelines, including all required content, and following the CEQA Appendix G checklist. Further, SVP conducted Public Scoping, which identified additional concerns to be addressed in the Draft IS/MND, expanding the scope of the CEQA document to include an EMF study which is not required as part of the CEQA Guidelines.

CEQA's Appendix G checklist does not include specific questions related to human health, *per se,* but it does include questions that address the physical condition of the environment that would be affected by the Project and the nature of the environment with project implementation. Human health is impacted by the physical condition of the environment.

> *CEQA defines "environment" to mean "the physical conditions which exist within the area which will be affected by a proposed project, including land, air, water, minerals, flora, fauna, noise, objects of historic or aesthetic significance." (Pub. Resources Code § 21060.5)*

For example, the Air Quality section discusses impacts related to toxic air contaminants, with which the thresholds of significance are set at a level that is agreed upon, by experts, to protect human health.

Not all impact analyses have quantitative thresholds due to their nature (Aesthetics, Energy, Public Services), and some concerns are not included in the CEQA checklist, because there is not a scientific consensus on a threshold of significance (See GR #2, EMF, as an example of this).

7.3.2. General Response #2 – EMF

Several commentors stated that consideration of EMF was absent prior to input during the scoping process. The scoping process is designed to do exactly this; shape the environmental analysis. Commentors also stated that the lack of specifics included in the EMF section is not acceptable.

A project-specific EMF report was conducted by qualified engineers and was published along with the Draft IS/MND.

Commentors stated that because some of the information had been previously published in an SVP report, they would like a more detailed analysis. While it is true that language from a 2020 report was used, this information is still considered up-to-date, and is fully applicable to the NRS-KRS Project. The EMF report expands on the information presented, uses up-to-date modeling software, and provides detailed engineering drawings and graphs.

Commentors included references to studies that further support SVP's conclusion – that there is no scientific consensus on EMF impacts to human health. One reference provided by commentors states the following:

> *"In order to have confidence that an exposure agent is actually linked to human disease, scientists look for strong and consistent associations from epidemiological research. In the cases of electric and magnetic fields, the studies have found only weak association, or no association, between exposure and the incidence of some cancers. In addition, study outcomes are not consistent… There is a general consensus within the scientific community that exposure to EMF is not responsible for human disease" (PSCW, 2017).*

It is not within the scope of this IS/MND to speculate on the impact of EMF on human health. The IS/MND has conducted a project-specific study on EMF and presented the results to be reviewed by the public and decision-making bodies.

Several comment letters included questions related to EMF. These are included below.

1. Have you conducted an existing EMF study to identify the current value of the community?
   (a) The EMF study included a simulation of current magnetic field strength values that exist in the area.
2. Are your EMF study values based on the cumulative, or interference of existing EMF and potential EMF.
   (a) The EMF study was set up to assume constructive interference between the potential sources of magnetic fields. This study would not capture potential destructive interference between sources of EMF. Destructive interference between sources of EMF would have the effect of reducing EMF.
3. EMF value was calculated based on existing studies. What was the delta between mathematical modeling and actual values (from existing structures).
   (a) No field study to take measurements of EMF was completed. The EMF study accounts for mathematical modeling as outlined in EPRI's (Electric Power Research Institute) Transmission Line Reference Book, an industry standard reference book addressing electrical aspects of transmission line design.
4. What is the delta between underground and overhead structures' EMF values?
   (a) The main change in reported magnetic field strength between overhead and underground placement of magnetic field sources would be due to proximity to the magnetic field source. For example, an underground cable producing magnetic fields 10 feet below the ground surface would result in a higher magnetic field at the typical reporting and measuring height of 1 meter above ground compared to an overhead conductor installed 20 feet above ground.
5. Can you provide the same for Route options B and C?
   (a) The EMF study was completed for the preferred alignment only. The EMF study is dependent on the proposed design of the transmission line and nearby adjacent sources of magnetic fields such as other power lines. The proposed loading for the proposed transmission line would remain the same so the only changing variables that would affect the reported magnetic field strengths would be the height of the poles, conductor phasing, and adjacent power lines. An EMF study will not be prepared for routes that are not analyzed in detail in the CEQA document.

6. What happens when electrification of rail lines happens- as this is already planned for the future? Have you potentially considered the cumulative EMF effect in coexistence of the high power lines and with railway lines' electrification? Will the EMF values not be much higher then?

   (a) The future electrification of the rail lines was not considered. Without having specific information for the future electrification of the rail line, it is difficult to speculate whether or not EMF levels will increase, stay the same, or decrease.

7. Can you share the mathematical modeling maps of EMF for 115kV, 230kV and the next two higher values of the power line?

   (a) The EMF report includes the modeling for the 115 kV transmission line. Magnetic fields are created by the current flow through the line. The current EMF report uses the forecasted current load (measured in amps) of the transmission line which is mostly independent of the operating voltage. Although the Project is being designed for future growth, there are currently no plans to energize this line to 230 kV or beyond.

8. Can you share EMF maps from existing structures of 115kV, 230kV and the next 2 higher values of the power line?

   (a) The existing power facilities identified running parallel to the proposed transmission line were included in the EMF report using existing load data from SVP. The existing power facilities along the alignment are 12 kV and 60 kV. Although the Project is being designed for future growth, there are currently no plans to energize this line to 230 kV or beyond.

9. Please share any EMF related information that you have especially if it contains assumptions for any calculations so we can understand the effects of current project and future projects.

   (a) All the data considered in the modeling of the magnetic field strength in the EMF report are detailed in the EMF report, which has been publicly available on the State Clearinghouse website since July 31, 2024.

10. Why does the electric pole structure proposed have wider diameter at the top? Can you share the design of the top of the pole? Can it be extended by adding another section by bolting, welding or any other method? If so, what extra voltage can be added to the line?

    (a) The structures themselves and their final geometries are still being finalized, but the proposed poles do not have a wider diameter at the top and are not expected to have a wider diameter at the top in the final design. While modifications to existing structures are possible and there is industry precedent for it, generally structures are replaced when significant upgrades become necessary. Although the Project is being designed for future growth, there are currently no plans to energize this line to 230 kV or beyond.

11. What is the proposed power consumption of 95054 zip code for the next 5, 10 and 15 years in the master plan?

    (a) Based on SVP's load growth plan, power consumption over the next 5, 10, and 15 years is estimated to be 450 MW, 538 MW, and 593 MW, respectively for the 95054 zip code. Please note that the 95054 zip code only includes a portion of the City.

7.3.3. General Response #3 – Corona and Induced Currents

Commentors expressed concerns about the Project's proximity to the railway line, and the potential risks associated with corona and induced current effects.

As described in Section 5.21, the corona effect for transmission lines describes the localized electrical discharge caused by ionization of the air surrounding the energized portions of the transmission line. The corona produced by a transmission line is dependent on multiple factors beyond operating voltage such as the diameter of the conductors, the location of conductors relative to each other, the elevation above sea level, weather, and more. Some possible byproducts of corona discharge on transmission lines include a faint glow, buzzing noise, and AM radio interference. Corona rings and specifically designed hardware designed for use on high voltage systems help mitigate corona by attenuating the electric field to reduce the electric field gradient that causes the ionization of the air adjacent to the energized surfaces. The corona effect is localized to the immediate vicinity of the energized portions of the transmission line.

To prevent any interference between the transmission line and the railroad, minimum safety clearances defined by the National Electrical Safety Code and CPUC's GO-95 would be met or exceeded by the Project. Additionally, the Applicant will work with UPRR as needed during the permitting process, to ensure that there are no adverse impacts due to corona or induced currents.

7.3.4. General Response #4 – Property Values and Cost

Commentors expressed concerns about the reason the proposed Project route was chosen, specifically citing costs of construction. Commentors also expressed concerns that the Project may decrease property values.

The proposed Project route was chosen due to several reasons. It is inaccurate to say that the route was chosen based on costs alone. In the initial design process, several routes were considered. Prior to initiation of the IS/MND, an Alternatives Analysis was done, which analyzed three routes, and identified the Proposed Project as the most feasible. The reasons for this were explained in Section 4.16.

Property values are not within the scope of a CEQA review. CEQA focuses on the potential physical impacts of a project. The economic effects of a project need only be considered if those effects themselves would cause a significant physical impact on the environment. Decreases in property values are not physical impacts, are speculative, and are difficult to predict. The IS/MND does not speculate about potential effects on property value. Therefore, given the CEQA guidance regarding social and economic impacts, this is not considered as part of CEQA environmental review.

7.3.5. General Response #5 – Aesthetics

Commentors expressed concerns about the aesthetic impact of the Project, citing that there were no photos from the east side of Lafayette Street presented in the IS/MND.

Revisions to Section 5.1 Aesthetics, were made to add additional information about the visual setting of the residents on the east side of Lafayette Street. The CEQA Appendix G questions focus on scenic resources and public views. The Project is located in a highly urbanized area. Public views of the Project would be from motorists and people on Lafayette Street, but private residences are not considered public viewpoints, and are therefore not specifically analyzed. However, public views from Lafayette Street, directly adjacent to these residents are analyzed.

Additionally, aesthetic impacts are analyzed based on the visual change from baseline conditions. The current visual setting includes transmission lines, telephone lines, street lighting, and traffic signals, as well as buildings, fences, landscaping, roads, and a railroad. For viewers looking at Lafayette Street from the sidewalk, the poles within the median of Lafayette Street would be widely spaced and would not

represent a substantial change in the existing visual context. Motorists on Lafayette Street would view the new poles in the context of a developed visually complex built urban environment, and views would be fleeting as they drive. The poles that would be installed in the median of Lafayette Street would be visually consistent with the existing visually complex and built urban environment.

Attached here are three images from Google Earth that show the existing visual setting of locations along Lafayette Street, and explanations for the reasons why the Project would not be considered a significant visual change to the existing setting.

The existing urbanized setting, illustrated in Figure 7-1, includes several industrial-type visual features, including power poles on both sides of Lafayette Street. Across Lafayette Street, several more power poles, a fenced railroad` right of way, NRS, and Levi's Stadium are visible. The Project's industrial elements would be consistent with the developed complex urban environment and would not result in a significant visual change.

Figure 7-1. View of Lafayette Street from the east side of the intersection of Lafayette Street and Fairway Glen Drive, looking west

Figure 7-2 illustrates the existing setting just north of the Mission Gardens community. This figure shows several industrial visual elements, such as power poles with several lines on them, light poles, a fenced railroad right of way, and traffic signals. The power poles shown in this image are older, shorter, and are spaced closer together than the proposed Project. Residents who would view the Project from the east side of Lafayette Street would have views of the poles from their windows, however, the poles would be spaced further apart than existing power poles on Lafayette Street, approximately 300 feet apart. Additionally, the poles would be much taller than existing infrastructure, increasing the conductor heights, and limiting the number of views from residences. The Project poles and lines would be viewed in the existing complex urban environment and are similar to the existing industrial elements present in the area. Therefore, there would be a low level of visual change.

Figure 7-2. View of Lafayette Street from the east side of the intersection of Lafayette Street and Hope Drive, looking south

This image illustrates the public view experienced by motorists travelling north on Lafayette Street. The existing visual setting includes industrial elements such as power poles, light poles, a fenced railroad right of way, and Levi's stadium in the background. Motorists on Lafayette Street would view the poles and lines in the median from this perspective, but their experience would be fleeting as they drive. The Project would introduce additional visual elements into the landscaped median but would not result in a significant visual change to the existing setting, given the existing complex visual environment of built and landscaped features. New poles would be widely spaced and existing landscaping between the street and buildings would often screen the views.

Figure 7-3. View of Lafayette Street from a motorist's perspective, adjacent to the Mission Gardens community, looking north

7.3.6. General Response #6 – Noise

Commentors expressed concerns related to noise produced by the Project during construction and after the new 115 kV transmission line becomes operational.

While construction of the project would create noise, this construction would occur within the times allowed under the City's noise ordinance and would be temporary and intermittent. It is estimated that construction will take 14 months for the overhead alignment, however, due to the linear nature of the Project, construction will be moving along the route during this 14-month construction period. After construction, ambient noise levels in the Project area are not anticipated to increase and would be similar to current noise levels.

There would be no noise produced by the Project after construction, aside from during maintenance activities or corona noise. The analysis anticipates no permanent increases in ambient noise levels in the project vicinity once the Project commences operation (Section 5.13.3) One source of audible noise would be due to the corona effect, which is caused by the electric field near the surface of the conductors (see Section 5.21.1.1, Corona).

Commentors specifically stated that they are concerned about noise levels, which are already high in the area due to the proximity of Lafayette Street, the railway line, and the air traffic route. Given that noise levels are elevated in the Project area, due to traffic noise and airport noise (Section 5.15.1), low levels of corona noise from Project components would not be noticeably audible and would not meaningfully contribute to an increase in noise levels relative to the existing conditions.

7.3.7. General Response #7 – Hazards

Commentors expressed concerns related to hazards, fire, and risk of accidents due to the proposed Project.

As stated in Section 5.7, Geology and Soils, the transmission line structures would be designed to meet or exceed all applicable local and State seismic design criteria.

As stated in Section 5.9, Hazards and Hazardous Materials, the Project would implement Mitigation Measure H-1 (Hazardous Substance Control and Emergency Response) and H-2 (Soil and Groundwater Management), to prevent and reduce potential impacts associated with hazardous material use and the potential for encountering soil or groundwater contamination.

As discussed in Section 5.15, Public Services, the Project area is adequately served by the City of Santa Clara's fire department. There are three fire stations located less than one mile from the proposed Project route, and the average response time is 3 minutes for all areas of the City.

As discussed in Sections 5.17, Transportation, and 5.20, Wildfire, the Project would not interfere with emergency response. These sections include a discussion of Mitigation Measure T-1 (Construction Traffic Control Plan), which ensures that access is maintained in the event of an emergency due to fire or other hazards. Fire risk associated with energized transmission lines is of concern in vegetated areas where the vegetation is a fuel source. In an urban setting, with lines located along streets, the risk of fire, such as from a downed line, is minimal.

Hazards due to induced current and the proximity to the railroad is discussed in General Response #3.

7.4. Responses to Comment Set A1 - California Department of Fish and Wildlife (CDFW)

Due to the specifics included in the CDFW comment letter, each concern was independently responded to. The alphanumeric codes correspond with the codes in the CDFW letter, presented in Appendix H, Public Comments on Draft IS/MND.

A1-1 Thank you for your comment. The CDFW reviewer indicated that a CESA Incidental Take Permit would be required should the Project result in impacts to any CESA listed species.

As described in Section 5.4.1 (Setting) of the IS/MND the Project is located within a fully developed urban area between the San Jose International Airport and Levi Stadium in the City dominated by urban hardscape and land cover. As described in the analysis, CESA listed species are not expected to occur in or near the Project area and the Project is not expected to result in the take of any species listed under CESA. Therefore, a CESA Incidental Take Permit is not required for this project.

A1-2 The CDFW reviewer indicated that a notification pursuant to Section 1600 et seq. of the California Fish and Game Code would be required should the Project substantially divert or obstruct the natural flow; change or use material from the bed, channel, or bank (including associated riparian or wetland resources); or deposit or dispose of material where it may pass into a river, lake, or stream.

As described in response to Comment A1-1, the project is located in an urbanized setting and there are no potentially jurisdictional waters or wetlands within the Project area. A supplemental site visit was conducted to verify site conditions and confirmed the analysis presented in Section 5.4 (Biological Resources). The Project will not affect any river, lake, or stream. No infrastructure will be installed beneath aquatic features. A Lake and Streambed Alteration Agreement is not required for the Project.

A1-3 Thank you for your comment. The CDFW reviewer notes that Fish and Games Codes provide protection to nesting birds and their eggs. Please see the response to Comment A1-9.

A1-4 The CDFW recommends the IS/MND analyze potential adverse impacts to fully protected species due to habitat modification, loss of foraging habitat, and/or interruption of migratory and breeding behaviors.

Due to a production error, Appendix E containing the table of known and potential occurrences of special-status species, including State fully protected species, that have the potential to occur in or near the Project area was inadvertently left out of the draft IS/MND. Appendix E is included in the Final IS/MND. The fully protected species identified in the assessment that do not also have a state and/or federal listing status include golden eagle and white-tailed kite. As described in Section 5.4.1 (Setting), the Project is located within a fully developed urban area dominated by urban hardscape and land cover. The Project area and surrounding land lack suitable habitat to support foraging or nesting for the golden eagle (Appendix E).

As described in Section 5.4.2(a)(Environmental Impacts and Mitigation Measures, Criterion ‘a’), limited suitable nesting trees are present within or near the proposed Project area that could support the white-tailed kite during nesting season. Marginal foraging habitat is present adjacent to the Northern Receiving Station, the landscaped interchange for Montague Expressway, and ruderal road shoulders along the west side of the Montague Expressway overpass. The limited marginal foraging habitat consists of ruderal land cover containing primarily grasses and other herbaceous vegetation. Current and historic Google Earth aerial and street view imagery identify these areas are periodically managed for weeds and fire abatement. To verify these conditions a supplemental site visit was conducted. No raptor nests were identified in suitable trees along the Project alignment and no white-tailed kites were observed. Due to the high level of human disturbance along the Project alignment and adjacent areas, the potential for white-tailed kite to nest or forage within or adjacent to the proposed Project area is low.

The Project would not result in habitat modification or the loss of foraging habitat, or the interruption of migratory behaviors. To ensure the Project does not impact breeding behavior or the viability of nests, should they occur, the IS/MND includes MM BIO-4 (Preconstruction Nesting

Bird Surveys and Nest Protection). This measure requires preconstruction nesting bird surveys and nest protection measures in the event an active bird or raptor nest is identified. MM BIO-2 (Biological Monitoring) requires a biological monitor who will conduct weekly monitoring checks of any sensitive resources that may be identified during the preconstruction surveys or incidentally found during construction. In addition, MM BIO-1 (Implement Worker Environmental Awareness Program) requires that all personnel working on the Project are trained on the applicable environmental regulations, BMPs, and other protective measures to ensure impacts to wildlife are reduced or avoided, as well as how to notify the biological monitor if an active nest or other wildlife are discovered in the Project work areas. The implementation of MM BIO-1 through MM BIO-3 will ensure impacts to fully protected species do not occur.

A1-5 The CDFW recommends that a full list or table is included in the updated Biological Resources Section of the IS/MND that notes species common name, scientific name, state and federal listing status (as applicable), habitat type preference and determination on presence, for all special-status species with the potential to occur within the Project area.

Due to a production error, Appendix E containing the table of known and potential occurrences of special-status species within the Project area was inadvertently left out of the draft IS/MND. However, the conclusions presented in the Draft IS/MND were based on the evaluation of all potential species that have the potential to occur. Species that were considered to have a very limited or unlikely potential to occur were not carried forward for analysis. Appendix E contains a list of those species and the table is included in the Final IS/MND. The table includes a full list of special-status plant and wildlife species identified during the literature review that have a potential to occur within the Project area and 5-mile query buffer. The common name, scientific name, listing status, habitat type preference, and determination on presence are included in the table for each species.

A1-6 The CDFW recommends the IS/MND provide baseline habitat assessments for special-status plant, fish and wildlife species located and potentially located within the Project area and surrounding lands, including all rare, threatened, and endangered species (CEQA Guidelines, §15380).

As stated in Section 5.4.1 (Setting), the IS/MND did include an assessment consistent with CEQA guidelines. The Project is located in an urbanized location and a review of the CDFW VegCAMP BIOS data was not initially conducted. A supplemental review of the Santa Cruz and Santa Clara Fine Scale Vegetation Map (TG & AIS 2023) shows the Project area and adjacent lands largely containing Urban (Developed) cover. Additionally, patches of Californian Annual & Perennial Grassland are mapped where the analysis identified ruderal land cover. Urban – Nonnative Forest cover were included urban landscape trees, particularly at the Oracle Santa Clara Campus/Agnews Historic Park. There are no sensitive vegetation communities in the Project area or adjacent areas.

The IS/MND adequately represented the vegetation communities within the Project area. As described in the Existing Habitat portion of Section 5.4.1 (Setting), "Urban/developed areas occur throughout the proposed Project area and adjacent lands, and include paved roads, bare ground associated with disturbance or development, buildings, paved parking lots, road medians and roadsides, railroad tracks and right-of-way, and landscaped areas. Land uses within the Study Area include residential, parks/open space, commercial, and industrial. Areas not containing hardscape are limited to residential, commercial, and roadside landscaped areas, landscaped parks/open space, and managed (e.g., mowing) ruderal areas of road shoulders and utility rights-of-way. Figure 5.4-1 identifies isolated ruderal communities, park/open space, and landscaped interchange areas meaningful to the analysis as they can provide marginal habitat for special-status species in some locations. The Study Area does not contain natural vegetation community alliances as described in A Manual of California Vegetation (Sawyer et al., 2009)."

As described in the Jurisdictional Waters portion of Section 5.4.1 (Setting), "There are no potentially jurisdictional waters or wetlands within the proposed Project area based upon a review of the USFWS NWI Wetlands Mapper (USFWS, 2024b), USGS Milpitas and San Jose West 7.5-minute quadrangle map, and Google Earth aerial and street view imagery. A formal aquatic resources delineation was not completed for the proposed Project."

A supplemental site visit was conducted to re-verify site conditions and confirmed the assessment of vegetation/land cover and habitat described in Section 5.4 (Biological Resources).

A1-7 The CDFW recommends that the California Natural Diversity Database (CNDDB), as well as previous studies performed in the area, be consulted to assess the potential presence of sensitive species and habitats. CDFW recommended a nine-quadrangle search to determine what may occur in the region.

The IS/MND adequately describes the potential of the proposed Project to impact sensitive plants and wildlife. A 5-mile buffer around the Project area was chosen for the CNDDB query conducted due to the heavily urbanized characteristic of the Project area and surrounding region. No Significant Natural Areas were identified within the Project area or 5-mile buffer.

Additional sources of information were utilized in this analysis, as listed in Section 5.4.1 (Setting), including the following:

- USFWS Information for Planning and Consultation federal resource list for the proposed Project area;
- CNPS Rare Plant Inventory species list within the 7.5-minute quadrangles overlapping the Project area, Milpitas and San Jose West;
- Jepson eFlora with access to the Consortium of California Herbaria record locations for special-status plants;
- California Academy of Sciences and National Geographic Society – iNaturalist observations within a 5-mile buffer around the Project area;
- Cornell Lab of Ornithology eBird sensitive species observations within a 5-mile buffer around the Project area;
- NRCS Web Soil Survey and National Hydric Soils List; and
- USFWS National Wetlands Inventory Wetlands Mapper.

A1-8 CDFW noted that according to Biogeographic Information and Observation System (BIOS) records, the Project site contains positive detections of several special-status species and has the potential to support numerous special-status species and their associated habitat.

The IS/MND adequately describes the potential for sensitive plants and wildlife to occur in or near the proposed Project area. We acknowledge the presence of special-status species occurrence records and the potential for the Project site to support several special-status species and their habitat in Section 5.4.1 (Setting – Special-Status Plants and Animals) and Section 5.4.2(a) (Environmental Impacts and Mitigation Measures – Criterion 'a'). However, the Project is located in an urban environment with limited habitat for sensitive species. Please also see the response to Comment A1-5.

A1-9 The CDFW notes that sensitive birds are known from the region and that trees would be removed during construction and recommends the project be constructed in compliance with APLIC guidelines.

Please see Comment A1-4 for the potential of sensitive birds to nest in any of the trees located in the Project area. In regard to APLIC guidelines, the IS/MND clearly defines the requirements to remain in compliance with APLIC guidelines. Section 4.11 (Project Components) states that the

Project is being designed in compliance with current APLIC guidelines and will have sufficient distance in between conductor wires as to prevent electrocution. The Project area does not contain wetlands or other aquatic features, large expanses of natural land cover, or agricultural fields that are attractive to birds and raptors (APLIC 1994). The ruderal land cover, landscaped interchange, and the Oracle Santa Clara Campus/Agnews Historic Park have the potential to attract birds; however, each of those areas has existing overhead electrical lines immediately adjacent to them. The Project would not substantially change the baseline conditions at those locations.

The Project does not propose new electrical distribution lines, generator-tie lines, or fences. Approximately half of the Project alignment involves existing utility poles supporting existing electrical transmission lines, electrical distribution lines, and/or communication lines, including along Lafayette Street between Agnew Road and Norman Avenue and between Laurelwood Road and the Kifer Receiving Station in the southern end of the Project. The Project would replace some of the existing utility poles along this portion of the alignment and be constructed with the existing lines as an underbuild to the proposed transmission lines; therefore, baseline conditions will not substantially change. The Project is being designed with enough distance between the conductor wires, to comply with current APLIC guidelines to prevent electrocution. SVP investigated the feasibility of placing the entire Project underground and concluded that it was infeasible due to the number of existing utilities underground that would necessitate relocations and require that the NRS-KRS line be buried very deep. An entirely underground option was determined to have more impacts due to the intensity required for construction and increase in ground disturbance when compared to an overhead line. Lastly, schedule and cost were considered, and an entirely underground option would cost more, take longer to construct, and would limit the capacity of the line, which would not meet the objectives of the Project.

A1-10 The CDFW recommends that MM BIO-4 be amended to include different nesting seasons for small bird species, owls, and other raptors, in addition to different survey radii for passerines, small raptors, and large raptors.

To respond to the request, MM BIO-4 (Preconstruction Nesting Bird Surveys and Nest Protection) has been modified to include the different nesting seasons for small bird species, owls, and other raptors as recommended. This measure has also been modified to incorporate the recommended survey radii of 250 feet for passerines and 500 feet for raptors.

MM BIO-4 requires that a preconstruction nesting bird survey shall be conducted no more than 7 days before any work activities occur at a given Project location. Further, if there is a break in construction at a work location for a period of 14 or more days during the nesting season, a new survey shall be completed before work resumes at that location. Additionally, MM BIO-2 requires weekly biological monitoring of any Project work locations in proximity to sensitive biological resources identified during preconstruction surveys, and any resources identified by the crew incidentally.

Given the highly urbanized nature of the Project area and surrounding region and limited line-of-sight due to residential and urban structures, the recommendation for conducting three surveys prior and including a 1,000-ft radii survey area for larger raptors would be excessive and would not contribute to the protection of these birds.

A1-11 The CDFW recommends the IS/MND should propose measures to conduct a bat habitat assessment of suitable bat roosting habitat, provide a survey methodology plan, and tree removal plan.

The IS/MND adequately characterized the potential for bats to roost and forage in the Project area and included measures to avoid or minimize impacts to local bats. Due to the heavily urbanized setting and the level of disturbance in proximity to the limited roosting and foraging

habitat, there is a very low potential for bats to be present in available roost habitat along the Project alignment. To verify the conclusions presented in the IS/MND, a supplemental site visit was performed to inspect the three trees proposed for removal. This survey confirmed the absence of structural features that provide day roost habitat for crevice and cavity/hollow roosting bats. In addition, MM BIO-5 (Preconstruction Bat Survey and Implement Avoidance Measures) requires a preconstruction survey for bats to determine if roost habitat is present and if bats are roosting in trees or other vegetation requiring removal for the Project. In the unlikely event that the trees proposed for removal develop features that provide suitable roost habitat, MM BIO-5 will ensure that impacts to roosting bats will not occur by requiring the development of a Bat Mitigation and Monitoring Plan which requires coordination with the City and CDFW. The Plan shall include information pertaining to the species of bat and location of the roost, the recommended two-step tree removal process, compensatory mitigation for permanent impacts (including specific mitigation ratios and location of proposed mitigation), and monitoring to assess bat use of mitigation areas.

A1-12 The CDFW notes that Crotch's bumble bee, a state candidate for listing, has been detected in the region and recommends a habitat assessment be conducted by a qualified entomologist knowledgeable with the life history and ecological requirements of Crotch's bumble bee.

The IS/MND adequately characterized the potential for Crotch's bumble bee to occur in the Project area. Due to the heavily urbanized setting and the existing level of disturbance, there is a very low/minimal potential for Crotch's bumble bee to be present along the Project alignment and adjacent land. To verify conditions, a supplemental site visit was conducted of the Project area which confirmed the presence of suitable nest habitat, California ground squirrel and other small mammal burrows, in the ruderal roadside land cover along Bassett Street and the landscaped interchange area south of the Montague Expressway overpass. However, the interchange area south of the overpass is outside of the Project work area and 50-ft avoidance buffer recommended for avoiding impacts to bumble bee nests, if present. Further, the ruderal roadside areas are extremely narrow and land use within and adjacent to the Project alignment contains few flowering plants that would provide high quality forage for Crotch's bumble bee. However, in the unlikely event this species occurs in the Project area during construction, the IS/MND included MM BIO-3 (Conduct Preconstruction Surveys for Special-Status Wildlife and Implement Avoidance Measures) which was modeled on the CDFW survey considerations for CESA candidate bumble bee species and requires a preconstruction survey for Crotch's bumble bee and the establishment of a 50-foot avoidance buffer around a nest, if present. MM BIO-3 states that the survey shall focus on the ruderal habitat within the utility right-of-way adjacent to the Northern Receiving Station and landscaped and ruderal land at the Montague Expressway interchange, but does not state that the survey shall be limited to these locations. Because of the low likelihood of this species occurring in the Project Area, SVP will not be seeking incidental take authorization for Crotch's bumble bee.

SVP has confirmed that the use of herbicides and mowing activities will not occur during construction and are not activities they apply for operations or maintenance of facilities in the Project area.

A1-13 The CDFW indicated that burrowing owl is known from the region and recommends the IS/MND should include a thorough habitat assessment of potential burrowing owl habitat within and adjacent to the Project area.

As discussed in Section 5.4.2(a)(Environmental Impacts and Mitigation Measures, Criterion 'a'), there are numerous CNDDB records for burrowing owl in the region of the Project area including a 2014 occurrence record overlapping the Northern Receiving Station, adjacent ruderal utility

right-of-way, and Levi's Stadium. To verify site conditions, a supplemental site visit was conducted of the Project area which included the most likely areas that could support burrowing owls. This included the northeastern end of the ruderal utility right-of-way adjacent to the Project. Habitat in this area appeared graded and contained a layer of erosion control material possibly from hydroseeding. No burrows or owls were observed from the fence line using binoculars. In other areas of the right-of-way, the vegetation was approximately 1 to 3 feet tall. In addition, the ruderal utility right-of-way does not provide suitable habitat for burrowing owl. Suitable burrowing owl habitat was not observed in the ruderal roadside areas or the landscaped interchange north of Montague Expressway. The narrow roadside area between Bassett Street and Lafayette Street was observed to lack suitable burrow habitat and contained a high degree of human presence. The narrow roadside areas adjacent to Montague Expressway on the west side of the overpass contained dense herbaceous vegetation approximately 3 to 5 feet tall. The landscaped interchange north of Montague Expressway was heavily disturbed by staging activities for an unrelated and unknown construction project. The landscaped interchange south of Montague Expressway contains suitable burrowing owl habitat (i.e., California ground squirrels and burrows, short vegetation); however, no owls or their sign were observed.

To ensure that owls are protected in the event that habitat and land cover/use changes over time, the IS/MND included MM BIO-3 (Conduct Preconstruction Surveys for Special-Status Wildlife and Implement Avoidance Measures) which includes prescriptive survey recommendations and mitigation guidelines for burrowing owls. If active burrows or potentially active burrows are identified, a 250-ft avoidance buffer will be established during the nesting season, and a 160-ft avoidance buffer outside the nesting season. Given the highly urbanized characterization of the Project area and surrounding region in addition to the small Project footprint, these avoidance buffer sizes would be adequate. Please note that MM BIO-3 also states "The prescribed buffers may be adjusted by the qualified avian biologist in coordination with the City and CDFW based on existing conditions around the burrow, planned construction activities, tolerance of the species at a given location, and other pertinent factors." This would include increasing buffers should an owl show signs of disturbance.

7.5. Responses to Comment Set A2 - SFPUC Water Enterprise

Representatives from the San Francisco Public Utilities Commission (SFPUC) submitted a comment identifying SFPUC parcels that may be within the proposed Project site. They requested that SVP work with SFPUCs Real Estate Services regarding land rights. SFPUC requested to be listed as a responsible agency in the CEQA document.

The proposed NRS-KRS 115 kV Transmission Line crosses the SFPUC ROW on Lafayette Street contained within the public road ROW. There are no proposed project activities that would encroach on SFPUC ROW. SVP will coordinate with SFPUC as needed to ensure that the Project follows the required SFPUC processes, and that the Project would not interfere with, endanger, or damage existing or future SFPUC operations, security, or facilities.

7.6. Responses to Comment Set A3 - San Jose International Airport

Representatives from the San Jose International Airport (SJC) submitted a comment which expressed concerns about some transmission structures in the southern portion of the Project, due to their height and location near the airport.

SVP and SJC held a meeting to discuss concerns that SJC had regarding the Project based on the filed 7460 form on the FAA's Obstruction Evaluation website. In the meeting, SJC shared their airport-specific requirements for One-Engine Inoperative elevation restrictions in the vicinity of the departure and

approach angles to the airport's runways. The structure location and height limits were discussed in relation to the specific needs of the airport in order to maintain a safe airspace around the airport. As a result of the meeting, structures on the proposed transmission line on Bassett Street south of the Laurie Avenue and Lafayette Street intersection are being designed so that each structure remains below the elevation limit defined by SJC's One-Engine Inoperative Surfaces map that was provided to SVP. No changes to the IS/MND are required due to this change.

7.7. Responses to Comment Set A4 - California Department of Transportation (Caltrans)

Representatives from the California Department of Transportation (Caltrans) submitted a comment letter which identified several regulations, restrictions, or permits, that may be required by the Project.

The letter identifies the Project as being within the Airport Land Use Compatibility Plan for Santa Clara County and recommends that the City consider the safety zone and noise compatibility policies stipulated in the ALUCP. Section 5.9, Hazards and Hazardous Materials, of the IS/MND explains that the Project will comply with FAA Part 77 regulations, ensuring impacts related to aviation hazards are less than significant.

The applicant will coordinate with Caltrans as needed prior to or during the construction process to ensure that any permits, such as Encroachment permits, are acquired.

7.8. Responses to Comment Set B1 through B74

Concerns raised in comments B1 through B74 are addressed in General Responses numbers 1 through 7, above.

Appendix A

List of Preparers

LIST OF PREPARERS

A consultant team headed by Aspen Environmental Group prepared this document under the direction of Silicon Valley Power. The preparers and technical reviewers of this document are presented below.

Lead Agency

Silicon Valley Power, City of Santa Clara

Allie Jackman, Principal Electric Utility Engineer ..... Project Manager & Lead Agency Contact

Project Management and Document Production

Aspen Environmental Group – Prime Contractor

Hedy Koczwara, Vice President, Sr. Environmental Scientist ..... Program Manager

Grace Weeks, Environmental Scientists ..... Project Manager, Agriculture and Forestry, Hydrology and Water Quality, Public Services, Utilities, and Service Systems, Population and Housing, Recreation

Fritts Golden, Senior Associate ..... Project Oversight, Aesthetics, Land Use and Planning, Corona and Induced Effects, Cumulative

Rachael Dal Porto, Environmental Engineer ..... Air Quality, Greenhouse Gas, Energy

Lauren DeOliveira, Cultural Resources Group Manager ..... Cultural Resources, Tribal Cultural Resources

Krystal Pulsipher, Senior Biologist ..... Biological Resources

Aurie Patterson, Environmental Scientist & Geologist ..... Geology and Soils, Hazards and Hazardous Materials, Mineral Resources

Jeffrey Linn ..... Noise, Transportation, Wildfire

Sharon Heesh ..... Document Production

Kati Simpson..... Graphic Design

Chris Notto ..... GIS/Graphics

Kramer Botanical – Subcontractor for Arborist Report

Neal Kramer, Botanist/Ecologist, Certified Arborist ..... Arborist Report

Appendix B

References

REFERENCES

4. Project Description

City of Santa Clara. 2023. MapSantaClara Parcel Identification. https://www.santaclaraca.gov/our-city/departments-a-f/community-development/planning-division/map-santa-clara. Accessed February 2024.

DHS (California Department of Health Services). 2002. An Evaluation of the Possible Risks from Electric and Magnetic Fields (EMFs) from Power Lines, Internal Wiring, Electrical Occupations, and Appliances. California EMF Program. June 2002. [Online]: https://ia.cpuc.ca.gov/Environment/info/esa/lakeview/resources/01_introduction.pdf. Accessed May 2024.

WHO (World Health Organization). 2001. International EMF Project. May 2001. [Online]: https://www.who.int/publications/m/item/international-advisory-committee-meeting-minutes-2001. Accessed May 2024.

_____. 2007. Environmental Health Criteria Monograph No. 238. Extremely Low Frequency Fields. March 13, 2007. [Online]: https://www.who.int/publications/i/item/9789241572385. Accessed May 2007.

5.1 Aesthetics

None

5.2 Agriculture and Forestry Resources

City of Santa Clara. 2014. City of Santa Clara Zoning Map. Updated January 2014. http://santaclaraca.gov/home/showdocument?id=756. Accessed April 1, 2024.

DOC (California Department of Conservation). 2022. California Important Farmland Finder. https://maps.conservation.ca.gov/DLRP/CIFF/. Accessed April 1, 2024.

DOC 2017. State of California Williamson Act Contract Land Map. https://planning.lacity.org/eir/HollywoodCenter/Deir/ELDP/(E)%20Initial%20Study/Initial%20Study/Attachment%20B%20References/California%20Department%20of%20Conservation%20Williamson%20Map%202016.pdf. Accessed April 1, 2024.

_____. 2016. Important Farmland in California, 2014. ftp://ftp.consrv.ca.gov/pub/dlrp/FMMP/pdf/statewide/2014/fmmp2014_08_11.pdf. Accessed April 1, 2024.

5.3 Air Quality

BAAQMD. 2022. CEQA Air Quality Guidelines. https://www.baaqmd.gov/plans-and-climate/california-environmental-quality-act-ceqa/updated-ceqa-guidelines. Accessed May 5, 2024.

_____. 2023. Air Quality Standards and Attainment Status. https://www.baaqmd.gov/about-air-quality/research-and-data/air-quality-standards-and-attainment-status. Accessed May 5, 2024.

CARB (California Air Resources Board). 2016. Ambient Air Quality Standards Chart. https://ww2.arb.ca.gov/sites/default/files/2020-07/aaqs2.pdf. Accessed May 5, 2024.

City of Santa Clara. 2014. City of Santa Clara 2010 2035 General Plan. City Council adopted on November 16, 2010. Updated December 9, 2014. https://www.santaclaraca.gov/our-city/departments-a-f/community-development/planning-division/general-plan. Accessed May 5, 2024.

5.4 Biological Resources

ABB (All About Birds), 2024. All About Birds: The Cornell Lab of Ornithology. [Online]: https://allaboutbirds.org. Accessed April 2024.

APLIC (Avian Power Line Interaction Committee). Mitigating Bird Collisions With Power Lines: The State of the Art in 1994. Edison Electric Institute and APLIC. Washington, D.C.

_____. 2006. Suggested Practices for Avian Protection on Power Lines: The State of the Art in 2006. Edison Electric Institute, APLIC, and the California Energy Commission. Washington, D.C. and Sacramento, CA. http://www.aplic.org/uploads/files/2643/SuggestedPractices2006(LR 2).pdf.

_____. 2012. Reducing Avian Collisions with Power Lines: The State of the Art in 2012. Edison Electric Institute and APLIC. Washington, D.C. http://www.aplic.org/uploads/files/11218/Reducing_Avian_Collisions_2012watermarkLR.pdf.

Baldwin et al., 2012 (Baldwin, B.G., D.H., Goldman, D.J. Keil, R. Patterson, and T.J. Rosatti). *The Jepson Manual: Higher Plants of California*. 2nd edition. University of California Press, Berkeley, California.

Bumble Bee Watch 2024 – Bumble Bee Watch, a collaborative effort to track and conserve North America's bumble bees. Partners: Wildlife Preservation Canada, The Xerces Society for Invertebrate Conservation, York University Faculty of Environmental Studies, University of Ottawa, Montreal Insectarium, London Natural History Museum, BeeSpotter. [Online]: https://www.bumblebeewatch.org/about/. Accessed April 2024.

CalTrans and CDFW (California Department of Fish and Wildlife). 2010. California Essential Habitat Connectivity Project: A Strategy for Conserving a Connected California. Available online at: https://wildlife.ca.gov/Science-Institute/Habitat-Connectivity. Accessed April 2024.

CDFW (California Department of Fish and Wildlife). 2013. Report to the Fish and Game Commission: Evaluation of the Petition from the Center for Biological Diversity to List Townsend's Big-eared Bat (*Corynorhinus townsendii*) as Threatened or Endangered Under the California Endangered Species Act. Prepared by California Department of Fish and Wildlife, March 2013.

_____. 2016. Status Review: Swainson's Hawk (Buteo swainsoni) in California. California Department of Fish and Wildlife, Wildlife and Fisheries Division Nongame Wildlife Program, Sacramento, CA. April 11, 2016.

_____. 2019. California Department of Fish and Wildlife (CDFW). Report to the Fish and Game Commission: Evaluation of the Petition from the Xerces Society, Defenders of Wildlife, and the Center for Food Safety to List Four Species of Bumble Bees as Endangered Under the California Endangered Species Act. Prepared by California Department of Fish and Wildlife, April 4, 2019.

_____. 2023. Survey Considerations for California Endangered Species Act (CESA) Candidate Bumble Bee Species. California Department of Fish and Wildlife, Sacramento, CA. Available online at: https://wildlife.ca.gov/Conservation/Survey-Protocols#377281281-invertebrates. Accessed April 2024.

_____. 2024. California Natural Diversity Database (CNDDB), Rarefind, Version 6. Heritage Section, CDFW, Sacramento.

CNPS (California Native Plant Society). 2024. Rare Plant Inventory. California Native Plant Society, Sacramento. [Online]: https://rareplants.cnps.org/Home/. Accessed April 2024.

CWHR. 2021. California Wildlife Habitat Relationships (CWHR) System. Various species accounts. Updated versions of California's Wildlife, edited by Zeiner, D.C. et all 1998-1990. CDFW, Sacramento, CA. [Online]: https://wildlife.ca.gov/Data/CWHR/Life-History-and-Range. Accessed: April 2024.

eBird.org. 2024. eBird: An online database of bird distribution and abundance [web application]. eBird, Ithaca, New York. [Online]: https://ebird.org/home. Accessed April 2024.

Hatfield, R., S. Jepson, R. Thorp, L. Richardson, S. Colla, 2008. Bombus caliginosus. The IUCN Red List of Threatened Species 2014: e.T44937726A69000748. [Online]: http://dx.doi.org/10.2305/IUCN.UK.2014-3.RLTS.T44937726A69000748.en. Accessed April 2024.

ICF International 2012. Final Santa Clara Valley Habitat Plan. Prepared for City of Gilroy, City of Morgan Hill, City of San Jose, County of Santa Clara, Santa Clara Valley Transportation Authority, and Santa Clara Valley Water District. August 2012. [Online]: https://www.scv-habitatagency.org/178/Santa-Clara-Valley-Habitat-Plan. Accessed April 2024.

iNaturalist. 2024. iNaturalist Online Database. [Online]: https://www.inaturalist.org/home. Accessed April 2024.

Jepson eFlora. 2024. Jepson eFlora. The Jepson Herbarium, University of California, Berkeley. Revision 12 (2023) [Online]: https://ucjeps.berkeley.edu/eflora/. Accessed April 2024.

Jepson, S., D.F. Schweitzer, B. Young, N. Sears, M. Ormes, S.H. Black, 2015. Conservation Status and Ecology of Monarchs in the United States. 36 pp. NatureServe, Arlington, Virginia, and the Xerces Society for Invertebrate Conservation, Portland, Oregon.

NAS 2023 – National Audubon Society (NAS). 2023. Important Bird Areas. [Online]: https://ca.audubon.org/important-bird-areas-9. Accessed April 2024.

NatureServe. 2024. NatureServe Explorer [web application]. NatureServe, Arlington, Virginia. [online]: https://explorer.natureserve.org/. Accessed April 2024.

Sawyer et al. (Sawyer, J., T. Keeler-Wolf, and J. Evans). 2009. A Manual of California Vegetation: Second Edition, 2009.

Shuford, W. D., and T. Gardali (editors). 2008. California Bird Species of Special Concern: A ranked assessment of species, subspecies, and distinct populations of birds of immediate conservation concern in California. Studies of Western Birds 1. Western Field Ornithologists, Camarillo, California, and California Department of Fish and Game, Sacramento.

USDA NRCS (U.S. Department of Agriculture, Natural Resources Conservation Service). 2024a. Web Soil Survey 3.4.0. [Online]: https://websoilsurvey.nrcs.usda.gov/app/. Accessed April 2024.

_____. 2024b. National Hydric Soil List by State. [Online]: https://www.nrcs.usda.gov/publications/query-by-state.html. Accessed April 2024.

USFWS (U.S. Fish and Wildlife Service). 2020. Monarch (*Danaus plexippus*) Species Status Assessment Report, version 2.1. Prepared by U.S. Fish and Wildlife Service. 96 pp + appendices.

_____. 2023. Species status assessment report for the northwestern pond turtle (*Actinemys marmorata*) and southwestern pond turtle (*Actinemys pallida*), Version 1.1, April 2023. U.S. Fish and Wildlife Service, Ventura Fish and Wildlife Office, Ventura, California.

_____. 2024a. IPaC: Information for Planning and Consultation. [Online]: https://ipac.ecosphere.fws.gov/. Accessed April 2024.

_____. 2024b. National Wetlands Inventory Wetlands Mapper. [Online]: https://fwsprimary.wim.usgs.gov/wetlands/apps/wetlands-mapper/

WBWG 2017 – Western Bat Working Group (WBWG). Western Bat Species. [Online]: http://wbwg.org/western-bat-species/. Accessed April 2024.

Xerces Society. 2018. Petition to the State of California, Fish and Game Commission, to list the Crotch bumble bee (*Bombus crotchii*), Franklin's bumble bee (*Bombus franklini*), Suckley cuckoo bumble bee (*Bombus suckleyi*), and western bumble bee (*Bombus occidentalis occidentalis*) as endangered under the California Endangered Species Act. Prepared by The Xerces Society for Invertebrate Conservation, Defenders of Wildlife, and Center for Food Safety. October 2018.

5.5 Cultural Resources

Broek, J.O.M. 1932. The Santa Clara Valley, California: A Study in Landscape Changes. N.v.A. Oosthoek's Utig. Maadtij, Utrecht.

Cutter, D.C. 1978. Plans for the Occupation of Upper California: A New Look at the "Dark Age" from 1602 to 1769. Journal of San Diego History 24(1):78-90.

Findlay, J.M. and D.M. Garaventa. 1983. Archaeological Resources of Downtown San Jose: A Preliminary Planning Summary of Prehistoric and Historic Sites in the Central Business District. MS on file, S 5905, CHRIS/NWIC, CSU Sonoma, Rohnert Park.

Fitzgerald, R.T. and J. Porcasi. 2003. The Metcalf Site (CA-SCL-178) and Its Place in Early Holocene California Prehistory. Society for California Archaeology Newsletter 37(4):27-31.

Fitzgerald, R.T. 1991. Archaic Milling Cultures of the Southern San Francisco Bay Region. Archives of California Prehistory 35. Coyote Press, Salinas.

Fredrickson, David A. 1973. Spatial and Cultural Units in Central California Archaeology. University of California, Berkley.

Hart, J.D. 1987. A Companion to California (revised and expanded). Oxford University Press, New York.

Heizer, R.F., and S.F. Cook. 1953. "Capay Man," An Ancient Central California Indian Burial. In Papers on California Archaeology: 21-26, edited by Richard F. Heizer. Reports of the University of California Archaeological Survey 22:24-26, University of California, Berkeley, Department of Anthropology.

Heizer, R.F. 1949. The Archaeology of Central California, L· The Early Horizon. University of California Anthropological Records. University of California Press, Berkeley. 12(1):1-84.

_____. 1952. A Review of Problems in the Antiquity of Man in California. In Symposium of the Antiquity of Man in California, pp. 1-10. Reports of the University of California Archaeological Survey No. 16:3 17.

_____. 1950. Observations on Early Man in California. In Papers on California Archaeology: 1-5, pp. 5-10. Reports of the University of California Archaeological Survey No.7, Berkeley.

Hendry, G.W. and J.N. Bowman. 1940. The Spanish and Mexican Adobe and Other Buildings in the Nine San Francisco Bay Counties, 1776 to about 1850 (and associated maps). MS on file, Bancroft Library, University of California, Berkeley.

Hildebrandt, W.R. 1983. Archaeological Research of the Southern Santa Clara Valley Project: Based on a Data Recovery Program from Sites CA-SCl-54, CA-SCl-163, CA-SCl-178, CA-SCl-237, and CA-SCl-241 Located in the Route 101 Corridor, Santa Clara County, California. Submitted to California Department of Transportation, District 4, San Francisco. Report S 6369. On file at the Northwest Information Center, Sonoma State University, Rohnert Park, CA.

Levy, R. 1978. Costanoan. In California, edited by R.F. Heizer, Volume 8. Handbook of North American Indians, W.G. Sturtevant, general editor, pp. 485-497. Smithsonian Institution, Washington, D.C.

Lillard, J.B., R.F. Heizer, and F. Fenenga. 1939. An Introduction to the Archaeology of Central California. Sacramento Junior College Department of Anthropology Bulletin 2. Board of Education of the Sacramento City Unified School District, Sacramento, California.

Meighan, C.W. 1965. Pacific Coast Archaeology. The Quaternary of the United States, edited by H.E. Wright and D.G. Frey.

Winther, J.C. 1935. Archaeological Investigations at CA-SCl-128, The Holiday Inn Site. For the Ohlone People and the Redevelopment Agency of the City of San Jose, California. MS on file, S-5281, CHRIS/NWIC, CSU Sonoma, Rohnert Park.

5.6 Energy

CEC (California Energy Commission). 2022. Final 2021 Integrated Energy Policy Report (IEPR), Volume II - Ensuring Reliability in a Changing Climate. https://efiling.energy.ca.gov/GetDocument.aspx?tn=241583. Accessed April 26, 2024.

_____. 2023a. 2021 Power Content Label for City of Santa Clara/Silicon Valley Power. https://www.energy.ca.gov/filebrowser/download/4673. Accessed April 26, 2024.

_____. 2023b. Refinery Inputs and Production, Weekly Fuels Watch Dashboard. Data last updated: September 27, 2023. https://www.energy.ca.gov/data-reports/reports/weekly-fuels-watch/refinery-inputs-and-production. Retrieved April 15, 2024.

_____. 2024. Electricity Consumption by Entity. http://www.ecdms.energy.ca.gov/elecbyutil.aspx. Accessed May 3, 2024.

CPUC (California Public Utilities Commission). 2008. Energy Action Plan, 2008 Update. February. http://www.cpuc.ca.gov/eaps/. Accessed April 26, 2024.

City of Santa Clara. 2024. Utility Fact Sheet. Electric Utility: City of Santa Clara. January–December 2023. http://www.siliconvalleypower.com/svp-and-community/about-svp/utility-fact-sheet. Accessed April 26, 2024.

SVP (Silicon Valley Power). 2023. Final 2023 Integrated Resource Plan for Silicon Valley Power. Adopted by the Santa Clara City Council, December 5, 2023. https://www.siliconvalleypower.com/home/showpublisheddocument/82481/638367924630670000. Accessed May 3, 2024.

5.7 Geology and Soils

CGS (California Geological Survey). 2001. Seismic Hazard Zone Report for the Milpitas 7.5-Minute Quadrangle, Alameda and Santa Clara Counties, California. https://maps.conservation.ca.gov/cgs/EQZApp/app/.

_____. 2016. Earthquake Shaking Potential for California. https://www.conservation.ca.gov/cgs/documents/publications/map-sheets/MS_048.pdf. Site specific data viewed at: https://usgs.maps.arcgis.com/apps/webappviewer/index.html?id=5a6038b3a1684561a9b0aadf88412fcf. Accessed April 2024.

_____. 2018. Earthquake Fault Zones, CGS Special Publication #42. https://www.conservation.ca.gov/cgs/Documents/Publications/Special-Publications/SP_042.pdf. Accessed April 2024.

_____. 2024a. Earthquake Zones of Required Investigation. https://maps.conservation.ca.gov/cgs/EQZApp/app/. Accessed April 2024.

_____. 2024b. Big California Earthquakes. https://www.conservation.ca.gov/cgs/earthquakes/significant. Accessed April 2024.

City of Santa Clara. 2011. City of Santa Clara Draft 2010-2035 General Plan: Integrated Final Environmental Impact Report. January 2011. http://santaclaraca.gov/home/showdocument?id=12900. Accessed April 2024.

_____. 2014. City of Santa Clara 2010-2035 General Plan. City Council adopted on November 16, 2010. Updated December 9, 2014. https://www.santaclaraca.gov/our-city/departments-a-f/community-development/planning-division/general-plan. Accessed April 2024.

County of Santa Clara. 2012. "Santa Clara County Geologic Hazard Zones." https://stgenpln.blob.core.windows.net/document/GEO_GeohazardATLAS.pdf. Accessed April 2024.

DWR (Department of Water Resources). 2024. Water Data Library Groundwater Levels. https://wdl.water.ca.gov/WaterDataLibrary/Map.aspx. Accessed April 2024.

Dibblee, T.W., and Minch, J.A. 2005. Geologic map of the Milpitas Quadrangle, Alameda and Santa Clara and Counties, California: Dibblee Geological Foundation, Dibblee Foundation Map DF-1531, scale 1:24,000. Viewed at: https://ngmdb.usgs.gov/Prodesc/proddesc_71767.htm. Accessed April 2024.

Helley, E.J., 1990, Preliminary contour map showing elevation of surface of Pleistocene alluvium under Santa Clara Valley, California: U.S. Geological Survey Open-File Report 90-633, scale 1:24,000. https://pubs.er.usgs.gov/publication/ofr90633. Accessed April 2024.

NRCS (Natural Resources Conservation Service). 2024. Web Soil Survey, Project Area Map and Data. https://websoilsurvey.sc.egov.usda.gov/App/WebSoilSurvey.aspx. Accessed April 2024.

SCCVWD (Santa Clara County Valley Water District). 2024. Your Water – Subsidence. https://www.valleywater.org/your-water/groundwater/subsidence. Accessed April 2024.

Society of Vertebrate Paleontology. 2010. Standard Procedures for the Assessment and Mitigation of Adverse Impacts to Paleontological Resources. https://vertpaleo.org/wp-content/uploads/2021/01/SVP_Impact_Mitigation_Guidelines-1.pdf. Accessed April 2024.

USGS (United States Geological Survey). 2024a. Land Subsidence in the Santa Clara Valley. https://www.usgs.gov/centers/land-subsidence-in-california/science/land-subsidence-santa-clara-valley . Accessed April 2024.

_____. 2024b. Earthquake Hazards Program, 2008 National Seismic Hazard Maps - Source Parameters. https://earthquake.usgs.gov/cfusion/hazfaults_2008_search/query_main.cfm. Accessed April 2024.

_____. 2024c. Earthquakes Hazard Program, Earthquake Catalog Search. https://earthquake.usgs.gov/earthquakes/search/. Accessed April 2024.

USGS and CGS (United States Geological Survey and California Geological Survey). 2024. Quaternary Fault and Fold Database of the United States KML files. https://www.usgs.gov/programs/earthquake-hazards/faults. Downloaded April 2024.

Youd, T.L. and D.M. Perkins. 1978. Mapping Liquefaction Induced Ground Failure Potential, in the Proceedings of the American Society of Civil Engineers, Journal of the Geotechnical Engineering Division.

5.8 Greenhouse Gas Emissions

CARB (Air Resources Board). 2023. California Greenhouse Gas Emissions for 2000-2021: Tends of Emissions and Other Indicators. December 14, 2023. https://ww2.arb.ca.gov/ghg-inventory-data. Accessed April 25, 2024.

_____. 2022. California's Scoping Plan for Achieving Carbon Neutrality. November 16, 2022. https://ww2.arb.ca.gov/sites/default/files/2022-12/2022-sp.pdf. Accessed April 25, 2024.

BAAQMD. 2022. CEQA Air Quality Guidelines. https://www.baaqmd.gov/plans-and-climate/california-environmental-quality-act-ceqa/updated-ceqa-guidelines. Accessed May 5, 2024.

IPCC (Intergovernmental Panel on Climate Change). 2022. Chapter 2: Emissions trends and drivers. Contribution of Working Group III to the Sixth Assessment Report of the Intergovernmental Panel on Climate Change. Cambridge University Press, Cambridge, UK and New York, NY, USA. https://www.ipcc.ch/report/ar6/wg3/chapter/chapter-2/. Accessed April 25, 2024.

OEHHA (Office of Environmental Health Hazard Assessment, California Environmental Protection Agency). 2018. *Indicators of Climate Change in California*. May. https://oehha.ca.gov/media/downloads/climate-change/report/2018caindicatorsreportmay 2018.pdf. Accessed April 25, 2024.

5.9 Hazards and Hazardous Materials

City of Santa Clara. 2014. City of Santa Clara General Plan – Chapter 5: Goals and Policies. https://www.santaclaraca.gov/home/showpublisheddocument/13934/635729106120730000. Accessed April 2024.

OEM (Office of Emergency Management). 2022. County of Santa Clara Emergency Operations Plan. January 2022. https://emergencymanagement.sccgov.org/sites/g/files/exjcpb261/files/document/2022%20EOP_County%20of%20Santa%20Clara_01.20.2022%20Accessibility%20Check.pdf. Accessed June 2024.

DTSC (California Department of Toxic Substances Control). 2024a. EnviroStor Database. https://www.envirostor.dtsc.ca.gov/public/map/?myaddress=santa+clara. Accessed April 2024.

_____. 2024b. EnviroStor database. "Cortese List Data Resources." https://www.envirostor.dtsc.ca.gov/public/search?cmd=search&reporttype=CORTESE&site_type=CSITES,FUDS&status=ACT,BKLG,COM&reporttitle=HAZARDOUS+WASTE+AND+SUBSTANCES+SITE+LIST+%28CORTESE%29. Accessed April 2024.

OSFM (Office of the State Fire Marshal). 2024. Frequently Asked Questions About: 2023 Fire Hazard Severity Zones., Updated March 11, 2024. https://34c031f8-c9fd-4018-8c5a-4159cdff6b0d-cdn-endpoint.azureedge.net/-/media/osfm-website/what-we-do/community-wildfire-preparedness-and-mitigation/fire-hazard-severity-zones/fire-hazard-severity-zones-map/2023-fhsz-faqs-march-11-2024.pdf?rev=4652b9617dec4dceac0e6443b19cfe8f&hash=9C503ABC051104ECE7CC0E7ECCB5FDE0. Accessed April 2024.

_____. 2024b. Santa Clara County, Fire Hazard Severity Zone Viewer. https://experience.arcgis.com/experience/03beab8511814e79a0e4eabf0d3e7247/. Accessed April 2024.

SCCALUC (Santa Clara County Airport Land Use Commission). 2024. Airport Land Use Compatibility Plan, Santa Clara County, San Jose Mineta International Airport. https://stgenpln.blob.core.windows.net/document/ALUC_SJC_CLUP.pdf. Accessed April 2024.

SWRCB (State Water Resources Control Board). 2024. State Water Resources Control Board GeoTracker, https://geotracker.waterboards.ca.gov/map/?CMD=runreport&myaddress=santa+clara. Accessed April 2024.

5.10 Hydrology and Water Quality

City of Santa Clara. 2014. City of Santa Clara General Plan – Chapter 5: Goals and Policies. http://santaclaraca.gov/home/showdocument?id=13934. Accessed March 2024.

DWR (California Department of Water Resources). 2003. Bulletin 118 Update 2003 – Basin Report 2_009_02. https://data.cnra.ca.gov/dataset/bulletin-118-update-2003-basin-reports/resource/20296ca3-a155-4285-8786-b775b89b9033. Accessed March 2024.

_____. 2024. Bulletin 118 Groundwater Basin Boundaries Dataset. https://data.cnra.ca.gov/dataset/i08-b118-ca-groundwaterbasins. Accessed March 2024.

FEMA (Federal Emergency Management Agency). 2009. Online flood map 06085C0064H, effective 05/18/2009. https://msc.fema.gov/portal/search?AddressQuery=santa%20clara. Accessed March 2024.

SWRCB (State Water Resources Control Board). 2018. Final California 2018 Integrated Report (303(d) List/305(b) Report), Supporting Information Regional Board 2 – San Francisco Bay Region, Water Body Name: Saratoga Creek. https://www.waterboards.ca.gov/water_issues/programs/water_quality_assessment/2018_integrated_report.html. Accessed March 2024.

5.11 Land Use and Planning

City of Santa Clara. 2014. City of Santa Clara General Plan – Chapter 5: Goals and Policies. http://santaclaraca.gov/home/showdocument?id=13934. Accessed March 2024.

_____. 2023a. MAP Santa Clara, Zoning Map. Updated January 1, 2023. https://www.santaclaraca.gov/our-city/departments-a-f/community-development/planning-division/map-santa-clara. Accessed March 2024.

_____. 2023b. Title 18 - Zoning Code. December 2023. [Online]: https://www.santaclaraca.gov/home/showpublisheddocument/82067/638386835249500000

5.12 Mineral Resources

CDOC (California Department of Conservation). 1996. Update of Mineral Land Classification: Aggregate Materials in the South San Francisco Bay Production-Consumption Region. DMG Open-File Report 96-03. Downloaded from: https://maps.conservation.ca.gov/cgs/informationwarehouse/index.html?map=mlc. Accessed April 2024.

_____. 2024a. CGS Information Warehouse: Mineral Land Classification. https://maps.conservation.ca.gov/cgs/informationwarehouse/index.html?map=mlc. Accessed April 2024.

_____. 2024b. SMARA Statutes and Regulations. https://www.conservation.ca.gov/dmr/lawsandregulations. Accessed April 2024.

Google Earth. 2024. Identification of CEMEX Concrete Plant south of Montague Expressway. https://earth.google.com/web/search/CEMEX+Santa+Clara+Concrete+Plant,+Russell+Avenue,+Santa+Clara,+CA/@37.38681316,-121.95740583,6.58677683a,1891.91957173d,35y,359.99980199h,0t,0r/data=Cq0BGoIBEnwKJTB4ODA4ZmM5OWFlYWU0MzJiZDoweGQxZmJiZGZjMWQ3NjU4NGMZYnpnWZyxQkAhsyodBzl9XsAqQUNFTUVYIFNhbnRhIENsYXJhIENvbmNyZXRlIFBsYW50LCBSdXNzZ

WxsIEF2ZW51ZSwgU2FudGEgQ2xhcmEsIENBGAIgASImCiQJ-NQjAbUCQ0AR-1fmKccBQ0AZS7-1SBxAXsAhyiI8v61AXsA6AwoBMA. Accessed June 2024.

USGS (United States Geological Survey). 2024. Mineral Resources Data System. https://mrdata.usgs.gov/mrds/. Accessed April 2024

5.13 Noise

City of Santa Clara. 2014. City of Santa Clara 2010 2035 General Plan. City Council adopted on November 16, 2010. Updated December 9, 2014. https://www.santaclaraca.gov/our-city/departments-a-f/community-development/planning-division/general-plan. Accessed April 3, 2024.

FHWA (Federal Highway Administration). 2006. Roadway Construction Noise Model, User's Guide. January. http://www.fhwa.dot.gov/environment/noise/construction_noise/rcnm/rcnm.pdf. Accessed April 3, 2024.

OPR (Governor's Office of Planning and Research). 2017. General Plan Guidelines: 2017 Update. Updated September 2017. http://www.opr.ca.gov/planning/general-plan/guidelines.html. Accessed April 3, 2024.

U.S. EPA (U.S. Environmental Protection Agency). 1974. Information on Levels of Environmental Noise Requisite to Protect Public Health and Welfare with an Adequate Margin of Safety. No. 550/ 9 74 004, Washington, D.C.

5.14 Population and Housing

City of Santa Clara. 2014a. City of Santa Clara General Plan – Chapter 5: Goals and Policies. http://santaclaraca.gov/home/showdocument?id=13934. Accessed March 2024.

_____. 2014b. City of Santa Clara General Plan – Appendix 8.12 Housing Element. https://www.santaclaraca.gov/home/showpublisheddocument/13932/635713044859030000. Accessed March 2024.

_____. 2023. MAP Santa Clara, Zoning Map. Updated January 1, 2023. https://www.santaclaraca.gov/our-city/departments-a-f/community-development/planning-division/map-santa-clara. Accessed March 2024.

California Department of Finance (CA DOF). 2023. E-5 Population and Housing Estimates for Cities, Counties, and the State, January 2021-2023, with 2020 Benchmark. Updated May 2023. https://dof.ca.gov/forecasting/demographics/estimates/e-5-population-and-housing-estimates-for-cities-counties-and-the-state-2020-2023/. Accessed March 2024.

California Employment Development Department (CA EDD). 2023. Labor Force and Unemployment Rate for Cities and Census Designated Places – 2023 Annual Average. https://labormarketinfo.edd.ca.gov/data/labor-force-and-unemployment-for-cities-and-census-areas.html. Accessed March 2024.

5.15 Public Services

City of Santa Clara. 2011. City of Santa Clara Draft 2010-2035 General Plan – Integrated Final Environmental Impact Report, Volume I EIR Text. https://www.santaclaraca.gov/our-city/departments-a-f/community-development/planning-division/general-plan. Accessed March 2024.

_____. 2014a. City of Santa Clara General Plan – Chapter 5: Goals and Policies. http://santaclaraca.gov/home/showdocument?id=13934. Accessed March 2024.

_____. 2024a. Parks. https://www.santaclaraca.gov/our-city/departments-g-z/parks-recreation/parks-pools/parks. Accessed March 2024.

_____. 2024b. Agnews Historic Park. https://www.santaclaraca.gov/Home/Components/ServiceDirectory/ServiceDirectory/321/2654. Accessed March 2024.

_____. 2024c. City of Santa Clara: Public Safety; Fire Stations and Police Stations within Santa Clara. https://missioncity.maps.arcgis.com/apps/MapTour/index.html?appid=15779cefd9bc463d8bc6229b61d921d5. Accessed March 2024.

_____. 2024d. Santa Clara Police Department – Fact Sheet. Updated February 15, 2024. https://www.santaclaraca.gov/our-city/departments-g-z/police-department/about-us/fact-sheet. Accessed March 2024.

5.16 Recreation

City of Santa Clara. 2014a. City of Santa Clara General Plan – Chapter 5: Goals and Policies. http://santaclaraca.gov/home/showdocument?id=13934. Accessed March 2024.

_____. 2024a. Parks. https://www.santaclaraca.gov/our-city/departments-g-z/parks-recreation/parks-pools/parks. Accessed March 2024.

_____. 2024b. Agnews Historic Park. https://www.santaclaraca.gov/Home/Components/ServiceDirectory/ServiceDirectory/321/2654Accessed March 2024.

5.17 Transportation

Caltrans (California Department of Transportation). 2020. 2020 Traffic Volumes on California State Highways." https://dot.ca.gov/programs/traffic-operations/census. Accessed April 3, 2024.

City of Santa Clara. 2011. City of Santa Clara Draft 2010-2035 General Plan: Integrated Final Environmental Impact Report. January 2011. http://santaclaraca.gov/home/showdocument?id=12900.

_____. 2013. "2013 City of Santa Clara Bicycle Map". http://santaclaraca.gov/home/showdocument?id=1326. Accessed April 3, 2024.

_____. 2014. City of Santa Clara General Plan – Chapter 5: Goals and Policies. https://www.santaclaraca.gov/our-city/departments-a-f/community-development/planning-division/general-plan. Accessed April 3, 2024.

VTA (Valley Transit Authority). 2021. Valley Transit Authority Transit Map. October 11, 2021. https://www.vta.org/sites/default/files/2021-10/VTA_MainMap_101121.pdf. Accessed April 3, 2024.

5.18 Tribal Cultural Resources

City of San Jose. 2011. Envision San Jose 2040 General Plan. Adopted November 1, 2011.

Golla, V. 2011. California Indian Languages. University of California Press, Berkeley.

King, C.D. 1977. Matalan Ethnohistory. In Final Report of Archaeological Test Excavations of Freeway 04 SCl-101, Post Mile 17.2/29.4, Cochrane Road to Ford Road, edited by S.A. Dietz. MS on file, S 4395, CHRIS/NWIC, CSU Sonoma, Rohnert Park.

Levy, R. 1978. Costanoan. In California, edited by R.F. Heizer, Volume 8. Handbook of North American Indians, W.G. Sturtevant, general editor, pp. 485-497. Smithsonian Institution, Washington, D.C.

Margolin, M. 1978. The Ohlone Way: Indian Life in the San Francisco–Monterey Bay Area. Heyday Books, Berkeley.

OPR (Office of Planning and Research). 2017.Technical Advisory: AB 52 and Tribal Cultural Resources in CEQA. https://www.opr.ca.gov/docs/20200224-AB_52_Technical_Advisory_Feb_2020.pdf.

5.19 Utilities and Service Systems

CalRecycle 2024a. Facility/Site Summary Details: Newby Island Sanitary Landfill (43 AN 0003). https://www2.calrecycle.ca.gov/SolidWaste/SiteActivity/Details/1362?siteID=3388. Accessed March 2024.

_____. 2024b. Facility/Site Summary Details: Guadalupe Sanitary Landfill (43-AN-0015). https://www2.calrecycle.ca.gov/SolidWaste/Site/Summary/3399. Accessed March 2024.

_____. 2024c. Facility/Site Summary Details: Corinda Los Trancos Landfill (Ox Mtn) (41 AA 0002). https://www2.calrecycle.ca.gov/SolidWaste/Site/Summary/3223. Accessed March 2024.

City of Santa Clara. 2014. City of Santa Clara 2010 2035 General Plan. City Council adopted on November 16, 2010. Updated December 9, 2014. https://www.santaclaraca.gov/our-city/departments-a-f/community-development/planning-division/general-plan. Accessed March 2024.

City of San Jose. 2024. San Jose–Santa Clara Regional Wastewater Facility. https://www.sanjoseca.gov/your-government/departments-offices/environmental-services/water-utilities/regional-wastewater-facility. Accessed March 2024.

Silicon Valley Power. 2023. Utility Fact Sheet. Electric Utility: City of Santa Clara. January-December 2023. https://www.siliconvalleypower.com/svp-and-community/about-svp/utility-fact-sheet. Accessed March 2024.

5.20 Wildfire

CAL FIRE (California Department of Forestry and Fire Protection). 2007. Santa Clara County Fire Hazard Severity Zones in SRA. Adopted November 7, 2007. http://frap.fire.ca.gov/webdata/maps/santa_clara/fhszs_map.43.pdf. Accessed April 1, 2024.

5.21 Corona and Induced Current Effects

IEEE (Institute of Electrical and Electronic Engineers). 1971. Radio Noise Subcommittee Report – Working Group No. 3. Radio Noise Design Guide For High Voltage Transmission Lines. IEEE Transactions on Power Apparatus and Systems, Volume PAS 90, Number 2, p. 833.

_____. 1979. J.E. Bridges and M.J Frazier. The Effect of 60 Hertz Fields and Currents on Cardiac Pacemakers. Page 30.

7 Response to Comments

OPR. 2024. CEQA Guidelines. [Online]: https://opr.ca.gov/ceqa/guidelines/. Accessed September 2024.

PSCW (Public Service Commission of Wisconsin) 2017. EMF Electric and Magnetic Fields. [Online]: https://psc.wi.gov/Documents/Brochures/EMF.pdf. Accessed September 2024.

US EPA 2023. Human Health Risk Assessment. Updated December 6, 2023. [Online]: https://www.epa.gov/risk/human-health-risk-assessment. Accessed September 2024.

Appendix C

Air Quality and Greenhouse Gas Emissions

Attachment 1

AQ/GHG Emissions Summary

Maximum Daily Emissions by Phase (lbs/day)											
	TOG	**ROG**	**NOx**	**CO**	**SO_2**	**PM10E**	**PM10D**	**PM10T**	**PM2.5E**	**PM2.5D**	**PM2.5T**
Demolition	2.56	2.14	19.61	19.52	0.03	0.79	11.80	12.59	0.73	1.18	1.91
Site Preparation	2.00	1.55	15.91	18.96	0.05	0.51	13.18	13.69	0.47	1.46	1.93
Overhead Pole Installation	2.15	1.71	16.75	21.09	0.04	0.45	12.63	13.08	0.42	1.39	1.81
Underground Trenching	1.05	0.79	8.90	13.37	0.03	0.19	12.63	12.82	0.18	1.39	1.57
Underground Vault Instalation	2.15	1.71	16.75	21.09	0.04	0.45	12.63	13.08	0.42	1.39	1.81
Paving and Cleanup	1.55	5.95	11.67	16.21	0.03	0.39	0.85	1.25	0.36	0.22	0.58
Maximum Daily Emissions	**2.56**	**5.95**	**19.61**	**21.09**	**0.05**	**0.79**	**13.18**	**13.69**	**0.73**	**1.46**	**1.93**

GHG Emissions (MT/year)						
Annual	**$NBCO_2$**	**CO_2T**	**CH_4**	**N_2O**	**R**	**CO_2e**
2027	592.38	592.38	0.03	0.04	0.24	604.41
2028	35.32	35.32	0.00	0.00	0.02	36.15
Total	**627.70**	**627.70**	**0.03**	**0.04**	**0.26**	**640.56**

Attachment 2

AQ GHG Inputs

Phase	Equipment Count	Equipment Type	Duration	Employees	HHDT (one way trips/day)
Demolition	1	Concrete/Industrial Saws	**2 weeks**	**15**	**40**
	2	Rubber Tired Dozers			
	3	Tractors/Loaders/Backhoes			
Site Preparation	5	Pickup truck	**1 month**	**15**	**40**
	1	Aerial Lifts			
	1	Bore/Drill Rigs			
	2	Cement and Mortar Mixers			
	1	Cranes			
	1	Excavators			
	1	Graders			
	1	Plate Compactors			
	1	Pumps			
	1	Rollers			
	1	Skid Steer Loaders			
	1	Tractors/Loaders/Backhoes			
Overhead Pole Installation	2	Aerial Lifts	**4 months**	**25**	**30**
	1	Bore/Drill Rigs			
	1	Cement and Mortar Mixers			
	1	Cranes			
	1	Excavators			
	1	Forklifts			
	1	Generator Sets			
	1	Other General Industrial Equipment			
	1	Rollers			
	1	Skid Steer Loaders			
	1	Tractors/Loaders/Backhoes			
	2	Welders			
Underground Trenching	2	Excavators	**3 months**	**25**	**30**
	2	Skid Steer Loaders			
	1	Tractors/Loaders/Backhoes			
	1	Aerial Lifts			
	1	Bore/Drill Rigs			
	1	Pumps			
Underground Vault Instalation	2	Aerial Lifts	**4 months**	**25**	**30**
	1	Bore/Drill Rigs			
	1	Cement and Mortar Mixers			
	1	Cranes			
	1	Excavators			
	1	Forklifts			
	1	Generator Sets			
	1	Other General Industrial Equipment			
	1	Rollers			
	1	Skid Steer Loaders			
	1	Tractors/Loaders/Backhoes			
	2	Welders			
Paving and Cleanup	1	Cement and Mortar Mixers	**6 weeks**	**25**	**40**
	1	Pavers			
	1	Paving Equipment			
	1	Rollers			
	1	Tractors/Loaders/Backhoes			
	1	Air Compressors			

Attachment 3

CalEEMod Output

NRS-KRS Detailed Report

Table of Contents

1. Basic Project Information

1.1. Basic Project Information

1.2. Land Use Types

1.3. User-Selected Emission Reduction Measures by Emissions Sector

2. Emissions Summary

2.1. Construction Emissions Compared Against Thresholds

2.2. Construction Emissions by Year, Unmitigated

2.3. Construction Emissions by Year, Mitigated

2.4. Operations Emissions Compared Against Thresholds

2.5. Operations Emissions by Sector, Unmitigated

2.6. Operations Emissions by Sector, Mitigated

3. Construction Emissions Details

3.1. Demolition (2027) - Unmitigated

3.2. Demolition (2027) - Mitigated

3.3. Site Preparation (2027) - Unmitigated

3.4. Site Preparation (2027) - Mitigated

3.5. Overhead Pole Installation (2027) - Unmitigated

3.6. Overhead Pole Installation (2027) - Mitigated

3.7. Underground Vault Instalation (2027) - Unmitigated

3.8. Underground Vault Instalation (2027) - Mitigated

3.9. Paving and Cleanup (2027) - Unmitigated

3.10. Paving and Cleanup (2027) - Mitigated

3.11. Paving and Cleanup (2028) - Unmitigated

3.12. Paving and Cleanup (2028) - Mitigated

3.13. Underground Trenching (2027) - Unmitigated

3.14. Underground Trenching (2027) - Mitigated

4. Operations Emissions Details

4.1. Mobile Emissions by Land Use

4.1.1. Unmitigated

4.1.2. Mitigated

4.2. Energy

4.2.1. Electricity Emissions By Land Use - Unmitigated

4.2.2. Electricity Emissions By Land Use - Mitigated

4.2.3. Natural Gas Emissions By Land Use - Unmitigated

4.2.4. Natural Gas Emissions By Land Use - Mitigated

4.3. Area Emissions by Source

4.3.1. Unmitigated

4.3.2. Mitigated

4.4. Water Emissions by Land Use

4.4.1. Unmitigated

4.4.2. Mitigated

4.5. Waste Emissions by Land Use

4.5.1. Unmitigated

4.5.2. Mitigated

4.6. Refrigerant Emissions by Land Use

4.6.1. Unmitigated

4.6.2. Mitigated

4.7. Offroad Emissions By Equipment Type

4.7.1. Unmitigated

4.7.2. Mitigated

4.8. Stationary Emissions By Equipment Type

4.8.1. Unmitigated

4.8.2. Mitigated

4.9. User Defined Emissions By Equipment Type

4.9.1. Unmitigated

4.9.2. Mitigated

4.10. Soil Carbon Accumulation By Vegetation Type

4.10.1. Soil Carbon Accumulation By Vegetation Type - Unmitigated

4.10.2. Above and Belowground Carbon Accumulation by Land Use Type - Unmitigated

4.10.3. Avoided and Sequestered Emissions by Species - Unmitigated

4.10.4. Soil Carbon Accumulation By Vegetation Type - Mitigated

4.10.5. Above and Belowground Carbon Accumulation by Land Use Type - Mitigated

4.10.6. Avoided and Sequestered Emissions by Species - Mitigated

5. Activity Data

5.1. Construction Schedule

5.2. Off-Road Equipment

5.2.1. Unmitigated

5.2.2. Mitigated

5.3. Construction Vehicles

5.3.1. Unmitigated

5.3.2. Mitigated

5.4. Vehicles

5.4.1. Construction Vehicle Control Strategies

5.5. Architectural Coatings

5.6. Dust Mitigation

5.6.1. Construction Earthmoving Activities

5.6.2. Construction Earthmoving Control Strategies

5.7. Construction Paving

5.8. Construction Electricity Consumption and Emissions Factors

5.9. Operational Mobile Sources

5.9.1. Unmitigated

5.9.2. Mitigated

5.10. Operational Area Sources

5.10.1. Hearths

5.10.1.1. Unmitigated

5.10.1.2. Mitigated

5.10.2. Architectural Coatings

5.10.3. Landscape Equipment

5.10.4. Landscape Equipment - Mitigated

5.11. Operational Energy Consumption

5.11.1. Unmitigated

5.11.2. Mitigated

5.12. Operational Water and Wastewater Consumption

5.12.1. Unmitigated

5.12.2. Mitigated

5.13. Operational Waste Generation

5.13.1. Unmitigated

5.13.2. Mitigated

5.14. Operational Refrigeration and Air Conditioning Equipment

5.14.1. Unmitigated

5.14.2. Mitigated

5.15. Operational Off-Road Equipment

5.15.1. Unmitigated

5.15.2. Mitigated

5.16. Stationary Sources

5.16.1. Emergency Generators and Fire Pumps

5.16.2. Process Boilers

5.17. User Defined

5.18. Vegetation

5.18.1. Land Use Change

5.18.1.1. Unmitigated

5.18.1.2. Mitigated

5.18.1. Biomass Cover Type

5.18.1.1. Unmitigated

5.18.1.2. Mitigated

5.18.2. Sequestration

5.18.2.1. Unmitigated

5.18.2.2. Mitigated

6. Climate Risk Detailed Report

6.1. Climate Risk Summary

6.2. Initial Climate Risk Scores

6.3. Adjusted Climate Risk Scores

6.4. Climate Risk Reduction Measures

7. Health and Equity Details

7.1. CalEnviroScreen 4.0 Scores

7.2. Healthy Places Index Scores

7.3. Overall Health & Equity Scores

7.4. Health & Equity Measures

7.5. Evaluation Scorecard

7.6. Health & Equity Custom Measures

8. User Changes to Default Data

1. Basic Project Information

1.1. Basic Project Information

Data Field	Value
Project Name	NRS-KRS
Construction Start Date	1/1/2027
Operational Year	2028
Lead Agency	—
Land Use Scale	Project/site
Analysis Level for Defaults	County
Windspeed (m/s)	3.00
Precipitation (days)	32.8
Location	37.40266834949317, -121.96598603995236
County	Santa Clara
City	Santa Clara
Air District	Bay Area AQMD
Air Basin	San Francisco Bay Area
TAZ	6706
EDFZ	1
Electric Utility	Silicon Valley Power
Gas Utility	Pacific Gas & Electric
App Version	2022.1.1.22

1.2. Land Use Types

Land Use Subtype	Size	Unit	Lot Acreage	Building Area (sq ft)	Landscape Area (sq ft)	Special Landscape Area (sq ft)	Population	Description

General Heavy Industry	1,098	1000sqft	25.2	1,098,000	0.00	—	—	—

1.3. User-Selected Emission Reduction Measures by Emissions Sector

Sector	#	Measure Title
Construction	C-2*	Limit Heavy-Duty Diesel Vehicle Idling
Construction	C-10-A	Water Exposed Surfaces

* Qualitative or supporting measure. Emission reductions not included in the mitigated emissions results.

2. Emissions Summary

2.1. Construction Emissions Compared Against Thresholds

Criteria Pollutants (lb/day for daily, ton/yr for annual) and GHGs (lb/day for daily, MT/yr for annual)

Un/Mit.	TOG	ROG	NOx	CO	SO2	PM10E	PM10D	PM10T	PM2.5E	PM2.5D	PM2.5T	BCO2	NBCO2	CO2T	CH4	N2O	R	CO2e
Daily, Summer (Max)	—	—	—	—	—	—	—	—	—	—	—	—	—	—	—	—	—	—
Unmit.	2.16	1.72	16.6	21.3	0.04	0.45	12.6	13.1	0.42	1.39	1.81	—	5,416	5,416	0.27	0.30	4.70	5,518
Mit.	2.16	1.72	16.6	21.3	0.04	0.45	12.6	13.1	0.42	1.39	1.81	—	5,416	5,416	0.27	0.30	4.70	5,518
% Reduced	—	—	—	—	—	—	—	—	—	—	—	—	—	—	—	—	—	—
Daily, Winter (Max)	—	—	—	—	—	—	—	—	—	—	—	—	—	—	—	—	—	—
Unmit.	2.86	5.95	22.6	21.8	0.05	0.82	13.2	13.7	0.76	1.46	2.16	—	6,164	6,164	0.34	0.41	0.14	6,294
Mit.	2.86	5.95	22.6	21.8	0.05	0.82	12.9	13.5	0.76	1.43	2.16	—	6,164	6,164	0.34	0.41	0.14	6,294
% Reduced	—	—	—	—	—	—	2%	2%	—	2%	—	—	—	—	—	—	—	—

Average Daily (Max)	—	—	—	—	—	—	—	—	—	—	—	—	—	—	—	—	—	—
Unmit.	1.35	1.20	10.6	13.5	0.03	0.29	8.29	8.58	0.27	0.92	1.19	—	3,578	3,578	0.19	0.22	1.48	3,651
Mit.	1.35	1.20	10.6	13.5	0.03	0.29	8.27	8.56	0.27	0.92	1.19	—	3,578	3,578	0.19	0.22	1.48	3,651
% Reduced	—	—	—	—	—	—	< 0.5%	< 0.5%	—	< 0.5%	< 0.5%	—	—	—	—	—	—	—
Annual (Max)	—	—	—	—	—	—	—	—	—	—	—	—	—	—	—	—	—	—
Unmit.	0.25	0.22	1.94	2.46	0.01	0.05	1.51	1.57	0.05	0.17	0.22	—	592	592	0.03	0.04	0.24	604
Mit.	0.25	0.22	1.94	2.46	0.01	0.05	1.51	1.56	0.05	0.17	0.22	—	592	592	0.03	0.04	0.24	604
% Reduced	—	—	—	—	—	—	< 0.5%	< 0.5%	—	< 0.5%	< 0.5%	—	—	—	—	—	—	—

2.2. Construction Emissions by Year, Unmitigated

Criteria Pollutants (lb/day for daily, ton/yr for annual) and GHGs (lb/day for daily, MT/yr for annual)

Year	TOG	ROG	NOx	CO	SO2	PM10E	PM10D	PM10T	PM2.5E	PM2.5D	PM2.5T	BCO2	NBCO2	CO2T	CH4	N2O	R	CO2e
Daily - Summer (Max)	—	—	—	—	—	—	—	—	—	—	—	—	—	—	—	—	—	—
2027	2.16	1.72	16.6	21.3	0.04	0.45	12.6	13.1	0.42	1.39	1.81	—	5,416	5,416	0.27	0.30	4.70	5,518
Daily - Winter (Max)	—	—	—	—	—	—	—	—	—	—	—	—	—	—	—	—	—	—
2027	2.86	5.95	22.6	21.8	0.05	0.82	13.2	13.7	0.76	1.46	2.16	—	6,164	6,164	0.34	0.41	0.14	6,294
2028	1.47	5.88	11.3	16.1	0.03	0.34	12.6	13.0	0.31	1.39	1.71	—	4,035	4,035	0.21	0.29	0.11	4,127
Average Daily	—	—	—	—	—	—	—	—	—	—	—	—	—	—	—	—	—	—
2027	1.35	1.20	10.6	13.5	0.03	0.29	8.29	8.58	0.27	0.92	1.19	—	3,578	3,578	0.19	0.22	1.48	3,651
2028	0.08	0.31	0.59	0.85	< 0.005	0.02	0.61	0.63	0.02	0.07	0.08	—	213	213	0.01	0.02	0.10	218
Annual	—	—	—	—	—	—	—	—	—	—	—	—	—	—	—	—	—	—

2027	0.25	0.22	1.94	2.46	0.01	0.05	1.51	1.57	0.05	0.17	0.22	—	592	592	0.03	0.04	0.24	604
2028	0.01	0.06	0.11	0.15	< 0.005	< 0.005	0.11	0.11	< 0.005	0.01	0.02	—	35.3	35.3	< 0.005	< 0.005	0.02	36.1

2.3. Construction Emissions by Year, Mitigated

Criteria Pollutants (lb/day for daily, ton/yr for annual) and GHGs (lb/day for daily, MT/yr for annual)

Year	TOG	ROG	NOx	CO	SO2	PM10E	PM10D	PM10T	PM2.5E	PM2.5D	PM2.5T	BCO2	NBCO2	CO2T	CH4	N2O	R	CO2e
Daily - Summer (Max)	—	—	—	—	—	—	—	—	—	—	—	—	—	—	—	—	—	—
2027	2.16	1.72	16.6	21.3	0.04	0.45	12.6	13.1	0.42	1.39	1.81	—	5,416	5,416	0.27	0.30	4.70	5,518
Daily - Winter (Max)	—	—	—	—	—	—	—	—	—	—	—	—	—	—	—	—	—	—
2027	2.86	5.95	22.6	21.8	0.05	0.82	12.9	13.5	0.76	1.43	2.16	—	6,164	6,164	0.34	0.41	0.14	6,294
2028	1.47	5.88	11.3	16.1	0.03	0.34	12.6	13.0	0.31	1.39	1.71	—	4,035	4,035	0.21	0.29	0.11	4,127
Average Daily	—	—	—	—	—	—	—	—	—	—	—	—	—	—	—	—	—	—
2027	1.35	1.20	10.6	13.5	0.03	0.29	8.27	8.56	0.27	0.92	1.19	—	3,578	3,578	0.19	0.22	1.48	3,651
2028	0.08	0.31	0.59	0.85	< 0.005	0.02	0.61	0.63	0.02	0.07	0.08	—	213	213	0.01	0.02	0.10	218
Annual	—	—	—	—	—	—	—	—	—	—	—	—	—	—	—	—	—	—
2027	0.25	0.22	1.94	2.46	0.01	0.05	1.51	1.56	0.05	0.17	0.22	—	592	592	0.03	0.04	0.24	604
2028	0.01	0.06	0.11	0.15	< 0.005	< 0.005	0.11	0.11	< 0.005	0.01	0.02	—	35.3	35.3	< 0.005	< 0.005	0.02	36.1

2.4. Operations Emissions Compared Against Thresholds

Criteria Pollutants (lb/day for daily, ton/yr for annual) and GHGs (lb/day for daily, MT/yr for annual)

Un/Mit.	TOG	ROG	NOx	CO	SO2	PM10E	PM10D	PM10T	PM2.5E	PM2.5D	PM2.5T	BCO2	NBCO2	CO2T	CH4	N2O	R	CO2e
Daily, Summer (Max)	—	—	—	—	—	—	—	—	—	—	—	—	—	—	—	—	—	—

Unmit.	0.00	0.00	0.00	0.00	0.00	0.00	0.00	0.00	0.00	0.00	0.00	0.00	0.00	0.00	0.00	0.00	0.00	0.00
Daily, Winter (Max)	—	—	—	—	—	—	—	—	—	—	—	—	—	—	—	—	—	—
Unmit.	0.00	0.00	0.00	0.00	0.00	0.00	0.00	0.00	0.00	0.00	0.00	0.00	0.00	0.00	0.00	0.00	0.00	0.00
Average Daily (Max)	—	—	—	—	—	—	—	—	—	—	—	—	—	—	—	—	—	—
Unmit.	0.00	0.00	0.00	0.00	0.00	0.00	0.00	0.00	0.00	0.00	0.00	0.00	0.00	0.00	0.00	0.00	0.00	0.00
Annual (Max)	—	—	—	—	—	—	—	—	—	—	—	—	—	—	—	—	—	—
Unmit.	0.00	0.00	0.00	0.00	0.00	0.00	0.00	0.00	0.00	0.00	0.00	0.00	0.00	0.00	0.00	0.00	0.00	0.00

2.5. Operations Emissions by Sector, Unmitigated

Criteria Pollutants (lb/day for daily, ton/yr for annual) and GHGs (lb/day for daily, MT/yr for annual)

Sector	TOG	ROG	NOx	CO	SO2	PM10E	PM10D	PM10T	PM2.5E	PM2.5D	PM2.5T	BCO2	NBCO2	CO2T	CH4	N2O	R	CO2e
Daily, Summer (Max)	—	—	—	—	—	—	—	—	—	—	—	—	—	—	—	—	—	—
Mobile	0.00	0.00	0.00	0.00	0.00	0.00	0.00	0.00	0.00	0.00	0.00	—	0.00	0.00	0.00	0.00	0.00	0.00
Area	—	0.00	—	—	—	—	—	—	—	—	—	—	—	—	—	—	—	—
Energy	0.00	0.00	0.00	0.00	0.00	0.00	—	0.00	0.00	—	0.00	—	0.00	0.00	0.00	0.00	—	0.00
Water	—	—	—	—	—	—	—	—	—	—	—	0.00	0.00	0.00	0.00	0.00	—	0.00
Waste	—	—	—	—	—	—	—	—	—	—	—	0.00	0.00	0.00	0.00	0.00	—	0.00
Refrig.	—	—	—	—	—	—	—	—	—	—	—	—	—	—	—	—	0.00	0.00
Total	0.00	0.00	0.00	0.00	0.00	0.00	0.00	0.00	0.00	0.00	0.00	0.00	0.00	0.00	0.00	0.00	0.00	0.00
Daily, Winter (Max)	—	—	—	—	—	—	—	—	—	—	—	—	—	—	—	—	—	—
Mobile	0.00	0.00	0.00	0.00	0.00	0.00	0.00	0.00	0.00	0.00	0.00	—	0.00	0.00	0.00	0.00	0.00	0.00

Area	—	0.00	—	—	—	—	—	—	—	—	—	—	—	—	—	—	—	—
Energy	0.00	0.00	0.00	0.00	0.00	0.00	—	0.00	0.00	—	0.00	—	0.00	0.00	0.00	0.00	—	0.00
Water	—	—	—	—	—	—	—	—	—	—	—	0.00	0.00	0.00	0.00	0.00	—	0.00
Waste	—	—	—	—	—	—	—	—	—	—	—	0.00	0.00	0.00	0.00	0.00	—	0.00
Refrig.	—	—	—	—	—	—	—	—	—	—	—	—	—	—	—	—	0.00	0.00
Total	0.00	0.00	0.00	0.00	0.00	0.00	0.00	0.00	0.00	0.00	0.00	0.00	0.00	0.00	0.00	0.00	0.00	0.00
Average Daily	—	—	—	—	—	—	—	—	—	—	—	—	—	—	—	—	—	—
Mobile	0.00	0.00	0.00	0.00	0.00	0.00	0.00	0.00	0.00	0.00	0.00	—	0.00	0.00	0.00	0.00	0.00	0.00
Area	—	0.00	—	—	—	—	—	—	—	—	—	—	—	—	—	—	—	—
Energy	0.00	0.00	0.00	0.00	0.00	0.00	—	0.00	0.00	—	0.00	—	0.00	0.00	0.00	0.00	—	0.00
Water	—	—	—	—	—	—	—	—	—	—	—	0.00	0.00	0.00	0.00	0.00	—	0.00
Waste	—	—	—	—	—	—	—	—	—	—	—	0.00	0.00	0.00	0.00	0.00	—	0.00
Refrig.	—	—	—	—	—	—	—	—	—	—	—	—	—	—	—	—	0.00	0.00
Total	0.00	0.00	0.00	0.00	0.00	0.00	0.00	0.00	0.00	0.00	0.00	0.00	0.00	0.00	0.00	0.00	0.00	0.00
Annual	—	—	—	—	—	—	—	—	—	—	—	—	—	—	—	—	—	—
Mobile	0.00	0.00	0.00	0.00	0.00	0.00	0.00	0.00	0.00	0.00	0.00	—	0.00	0.00	0.00	0.00	0.00	0.00
Area	—	0.00	—	—	—	—	—	—	—	—	—	—	—	—	—	—	—	—
Energy	0.00	0.00	0.00	0.00	0.00	0.00	—	0.00	0.00	—	0.00	—	0.00	0.00	0.00	0.00	—	0.00
Water	—	—	—	—	—	—	—	—	—	—	—	0.00	0.00	0.00	0.00	0.00	—	0.00
Waste	—	—	—	—	—	—	—	—	—	—	—	0.00	0.00	0.00	0.00	0.00	—	0.00
Refrig.	—	—	—	—	—	—	—	—	—	—	—	—	—	—	—	—	0.00	0.00
Total	0.00	0.00	0.00	0.00	0.00	0.00	0.00	0.00	0.00	0.00	0.00	0.00	0.00	0.00	0.00	0.00	0.00	0.00

2.6. Operations Emissions by Sector, Mitigated

Criteria Pollutants (lb/day for daily, ton/yr for annual) and GHGs (lb/day for daily, MT/yr for annual)

Sector	TOG	ROG	NOx	CO	SO2	PM10E	PM10D	PM10T	PM2.5E	PM2.5D	PM2.5T	BCO2	NBCO2	CO2T	CH4	N2O	R	CO2e

Daily, Summer (Max)	—	—	—	—	—	—	—	—	—	—	—	—	—	—	—	—	—	—
Mobile	0.00	0.00	0.00	0.00	0.00	0.00	0.00	0.00	0.00	0.00	0.00	—	0.00	0.00	0.00	0.00	0.00	0.00
Area	—	0.00	—	—	—	—	—	—	—	—	—	—	—	—	—	—	—	—
Energy	0.00	0.00	0.00	0.00	0.00	0.00	—	0.00	0.00	—	0.00	—	0.00	0.00	0.00	0.00	—	0.00
Water	—	—	—	—	—	—	—	—	—	—	—	0.00	0.00	0.00	0.00	0.00	—	0.00
Waste	—	—	—	—	—	—	—	—	—	—	—	0.00	0.00	0.00	0.00	0.00	—	0.00
Refrig.	—	—	—	—	—	—	—	—	—	—	—	—	—	—	—	—	0.00	0.00
Total	0.00	0.00	0.00	0.00	0.00	0.00	0.00	0.00	0.00	0.00	0.00	0.00	0.00	0.00	0.00	0.00	0.00	0.00
Daily, Winter (Max)	—	—	—	—	—	—	—	—	—	—	—	—	—	—	—	—	—	—
Mobile	0.00	0.00	0.00	0.00	0.00	0.00	0.00	0.00	0.00	0.00	0.00	—	0.00	0.00	0.00	0.00	0.00	0.00
Area	—	0.00	—	—	—	—	—	—	—	—	—	—	—	—	—	—	—	—
Energy	0.00	0.00	0.00	0.00	0.00	0.00	—	0.00	0.00	—	0.00	—	0.00	0.00	0.00	0.00	—	0.00
Water	—	—	—	—	—	—	—	—	—	—	—	0.00	0.00	0.00	0.00	0.00	—	0.00
Waste	—	—	—	—	—	—	—	—	—	—	—	0.00	0.00	0.00	0.00	0.00	—	0.00
Refrig.	—	—	—	—	—	—	—	—	—	—	—	—	—	—	—	—	0.00	0.00
Total	0.00	0.00	0.00	0.00	0.00	0.00	0.00	0.00	0.00	0.00	0.00	0.00	0.00	0.00	0.00	0.00	0.00	0.00
Average Daily	—	—	—	—	—	—	—	—	—	—	—	—	—	—	—	—	—	—
Mobile	0.00	0.00	0.00	0.00	0.00	0.00	0.00	0.00	0.00	0.00	0.00	—	0.00	0.00	0.00	0.00	0.00	0.00
Area	—	0.00	—	—	—	—	—	—	—	—	—	—	—	—	—	—	—	—
Energy	0.00	0.00	0.00	0.00	0.00	0.00	—	0.00	0.00	—	0.00	—	0.00	0.00	0.00	0.00	—	0.00
Water	—	—	—	—	—	—	—	—	—	—	—	0.00	0.00	0.00	0.00	0.00	—	0.00
Waste	—	—	—	—	—	—	—	—	—	—	—	0.00	0.00	0.00	0.00	0.00	—	0.00
Refrig.	—	—	—	—	—	—	—	—	—	—	—	—	—	—	—	—	0.00	0.00
Total	0.00	0.00	0.00	0.00	0.00	0.00	0.00	0.00	0.00	0.00	0.00	0.00	0.00	0.00	0.00	0.00	0.00	0.00

Annual	—	—	—	—	—	—	—	—	—	—	—	—	—	—	—	—	—	—
Mobile	0.00	0.00	0.00	0.00	0.00	0.00	0.00	0.00	0.00	0.00	0.00	—	0.00	0.00	0.00	0.00	0.00	0.00
Area	—	0.00	—	—	—	—	—	—	—	—	—	—	—	—	—	—	—	—
Energy	0.00	0.00	0.00	0.00	0.00	0.00	—	0.00	0.00	—	0.00	—	0.00	0.00	0.00	0.00	—	0.00
Water	—	—	—	—	—	—	—	—	—	—	—	0.00	0.00	0.00	0.00	0.00	—	0.00
Waste	—	—	—	—	—	—	—	—	—	—	—	0.00	0.00	0.00	0.00	0.00	—	0.00
Refrig.	—	—	—	—	—	—	—	—	—	—	—	—	—	—	—	—	0.00	0.00
Total	0.00	0.00	0.00	0.00	0.00	0.00	0.00	0.00	0.00	0.00	0.00	0.00	0.00	0.00	0.00	0.00	0.00	0.00

3. Construction Emissions Details

3.1. Demolition (2027) - Unmitigated

Criteria Pollutants (lb/day for daily, ton/yr for annual) and GHGs (lb/day for daily, MT/yr for annual)

Location	TOG	ROG	NOx	CO	SO2	PM10E	PM10D	PM10T	PM2.5E	PM2.5D	PM2.5T	BCO2	NBCO2	CO2T	CH4	N2O	R	CO2e
Onsite	—	—	—	—	—	—	—	—	—	—	—	—	—	—	—	—	—	—
Daily, Summer (Max)	—	—	—	—	—	—	—	—	—	—	—	—	—	—	—	—	—	—
Daily, Winter (Max)	—	—	—	—	—	—	—	—	—	—	—	—	—	—	—	—	—	—
Off-Road Equipment	2.54	2.14	19.4	19.4	0.03	0.79	—	0.79	0.73	—	0.73	—	3,582	3,582	0.15	0.03	—	3,595
Demolition	—	—	—	—	—	—	0.00	0.00	—	0.00	0.00	—	—	—	—	—	—	—
Onsite truck	0.01	< 0.005	0.09	0.06	< 0.005	< 0.005	11.8	11.8	< 0.005	1.18	1.18	—	33.3	33.3	< 0.005	0.01	< 0.005	35.0
Average Daily	—	—	—	—	—	—	—	—	—	—	—	—	—	—	—	—	—	—

Off-Road Equipment	0.07	0.06	0.53	0.53	< 0.005	0.02	—	0.02	0.02	—	0.02	—	98.1	98.1	< 0.005	< 0.005	—	98.5
Demolition	—	—	—	—	—	—	0.00	0.00	—	0.00	0.00	—	—	—	—	—	—	—
Onsite truck	< 0.005	< 0.005	< 0.005	< 0.005	< 0.005	< 0.005	0.29	0.29	< 0.005	0.03	0.03	—	0.91	0.91	< 0.005	< 0.005	< 0.005	0.96
Annual	—	—	—	—	—	—	—	—	—	—	—	—	—	—	—	—	—	—
Off-Road Equipment	0.01	0.01	0.10	0.10	< 0.005	< 0.005	—	< 0.005	< 0.005	—	< 0.005	—	16.2	16.2	< 0.005	< 0.005	—	16.3
Demolition	—	—	—	—	—	—	0.00	0.00	—	0.00	0.00	—	—	—	—	—	—	—
Onsite truck	< 0.005	< 0.005	< 0.005	< 0.005	< 0.005	< 0.005	0.05	0.05	< 0.005	0.01	0.01	—	0.15	0.15	< 0.005	< 0.005	< 0.005	0.16
Offsite	—	—	—	—	—	—	—	—	—	—	—	—	—	—	—	—	—	—
Daily, Summer (Max)	—	—	—	—	—	—	—	—	—	—	—	—	—	—	—	—	—	—
Daily, Winter (Max)	—	—	—	—	—	—	—	—	—	—	—	—	—	—	—	—	—	—
Worker	0.09	0.08	0.07	0.91	0.00	0.00	0.25	0.25	0.00	0.06	0.06	—	229	229	0.01	0.01	0.02	232
Vendor	0.02	0.01	0.33	0.16	< 0.005	< 0.005	0.07	0.07	< 0.005	0.02	0.02	—	260	260	0.01	0.04	0.01	272
Hauling	0.20	0.04	2.63	1.26	0.01	0.03	0.56	0.58	0.03	0.15	0.18	—	2,059	2,059	0.17	0.33	0.10	2,160
Average Daily	—	—	—	—	—	—	—	—	—	—	—	—	—	—	—	—	—	—
Worker	< 0.005	< 0.005	< 0.005	0.02	0.00	0.00	0.01	0.01	0.00	< 0.005	< 0.005	—	6.35	6.35	< 0.005	< 0.005	0.01	6.45
Vendor	< 0.005	< 0.005	0.01	< 0.005	< 0.005	< 0.005	< 0.005	< 0.005	< 0.005	< 0.005	< 0.005	—	7.12	7.12	< 0.005	< 0.005	0.01	7.45
Hauling	0.01	< 0.005	0.07	0.03	< 0.005	< 0.005	0.01	0.02	< 0.005	< 0.005	< 0.005	—	56.4	56.4	< 0.005	0.01	0.05	59.2
Annual	—	—	—	—	—	—	—	—	—	—	—	—	—	—	—	—	—	—
Worker	< 0.005	< 0.005	< 0.005	< 0.005	0.00	0.00	< 0.005	< 0.005	0.00	< 0.005	< 0.005	—	1.05	1.05	< 0.005	< 0.005	< 0.005	1.07
Vendor	< 0.005	< 0.005	< 0.005	< 0.005	< 0.005	< 0.005	< 0.005	< 0.005	< 0.005	< 0.005	< 0.005	—	1.18	1.18	< 0.005	< 0.005	< 0.005	1.23
Hauling	< 0.005	< 0.005	0.01	0.01	< 0.005	< 0.005	< 0.005	< 0.005	< 0.005	< 0.005	< 0.005	—	9.34	9.34	< 0.005	< 0.005	0.01	9.80

3.2. Demolition (2027) - Mitigated

Criteria Pollutants (lb/day for daily, ton/yr for annual) and GHGs (lb/day for daily, MT/yr for annual)

Location	TOG	ROG	NOx	CO	SO2	PM10E	PM10D	PM10T	PM2.5E	PM2.5D	PM2.5T	BCO2	NBCO2	CO2T	CH4	N2O	R	CO2e
Onsite	—	—	—	—	—	—	—	—	—	—	—	—	—	—	—	—	—	—
Daily, Summer (Max)	—	—	—	—	—	—	—	—	—	—	—	—	—	—	—	—	—	—
Daily, Winter (Max)	—	—	—	—	—	—	—	—	—	—	—	—	—	—	—	—	—	—
Off-Road Equipment	2.54	2.14	19.4	19.4	0.03	0.79	—	0.79	0.73	—	0.73	—	3,582	3,582	0.15	0.03	—	3,595
Demolition	—	—	—	—	—	—	0.00	0.00	—	0.00	0.00	—	—	—	—	—	—	—
Onsite truck	0.01	< 0.005	0.09	0.06	< 0.005	< 0.005	11.8	11.8	< 0.005	1.18	1.18	—	33.3	33.3	< 0.005	0.01	< 0.005	35.0
Average Daily	—	—	—	—	—	—	—	—	—	—	—	—	—	—	—	—	—	—
Off-Road Equipment	0.07	0.06	0.53	0.53	< 0.005	0.02	—	0.02	0.02	—	0.02	—	98.1	98.1	< 0.005	< 0.005	—	98.5
Demolition	—	—	—	—	—	—	0.00	0.00	—	0.00	0.00	—	—	—	—	—	—	—
Onsite truck	< 0.005	< 0.005	< 0.005	< 0.005	< 0.005	< 0.005	0.29	0.29	< 0.005	0.03	0.03	—	0.91	0.91	< 0.005	< 0.005	< 0.005	0.96
Annual	—	—	—	—	—	—	—	—	—	—	—	—	—	—	—	—	—	—
Off-Road Equipment	0.01	0.01	0.10	0.10	< 0.005	< 0.005	—	< 0.005	< 0.005	—	< 0.005	—	16.2	16.2	< 0.005	< 0.005	—	16.3
Demolition	—	—	—	—	—	—	0.00	0.00	—	0.00	0.00	—	—	—	—	—	—	—
Onsite truck	< 0.005	< 0.005	< 0.005	< 0.005	< 0.005	< 0.005	0.05	0.05	< 0.005	0.01	0.01	—	0.15	0.15	< 0.005	< 0.005	< 0.005	0.16
Offsite	—	—	—	—	—	—	—	—	—	—	—	—	—	—	—	—	—	—

Daily, Summer (Max)	—	—	—	—	—	—	—	—	—	—	—	—	—	—	—	—	—	—
Daily, Winter (Max)	—	—	—	—	—	—	—	—	—	—	—	—	—	—	—	—	—	—
Worker	0.09	0.08	0.07	0.91	0.00	0.00	0.25	0.25	0.00	0.06	0.06	—	229	229	0.01	0.01	0.02	232
Vendor	0.02	0.01	0.33	0.16	< 0.005	< 0.005	0.07	0.07	< 0.005	0.02	0.02	—	260	260	0.01	0.04	0.01	272
Hauling	0.20	0.04	2.63	1.26	0.01	0.03	0.56	0.58	0.03	0.15	0.18	—	2,059	2,059	0.17	0.33	0.10	2,160
Average Daily	—	—	—	—	—	—	—	—	—	—	—	—	—	—	—	—	—	—
Worker	< 0.005	< 0.005	< 0.005	0.02	0.00	0.00	0.01	0.01	0.00	< 0.005	< 0.005	—	6.35	6.35	< 0.005	< 0.005	0.01	6.45
Vendor	< 0.005	< 0.005	0.01	< 0.005	< 0.005	< 0.005	< 0.005	< 0.005	< 0.005	< 0.005	< 0.005	—	7.12	7.12	< 0.005	< 0.005	0.01	7.45
Hauling	0.01	< 0.005	0.07	0.03	< 0.005	< 0.005	0.01	0.02	< 0.005	< 0.005	< 0.005	—	56.4	56.4	< 0.005	0.01	0.05	59.2
Annual	—	—	—	—	—	—	—	—	—	—	—	—	—	—	—	—	—	—
Worker	< 0.005	< 0.005	< 0.005	< 0.005	0.00	0.00	< 0.005	< 0.005	0.00	< 0.005	< 0.005	—	1.05	1.05	< 0.005	< 0.005	< 0.005	1.07
Vendor	< 0.005	< 0.005	< 0.005	< 0.005	< 0.005	< 0.005	< 0.005	< 0.005	< 0.005	< 0.005	< 0.005	—	1.18	1.18	< 0.005	< 0.005	< 0.005	1.23
Hauling	< 0.005	< 0.005	0.01	0.01	< 0.005	< 0.005	< 0.005	< 0.005	< 0.005	< 0.005	< 0.005	—	9.34	9.34	< 0.005	< 0.005	0.01	9.80

3.3. Site Preparation (2027) - Unmitigated

Criteria Pollutants (lb/day for daily, ton/yr for annual) and GHGs (lb/day for daily, MT/yr for annual)

Location	TOG	ROG	NOx	CO	SO2	PM10E	PM10D	PM10T	PM2.5E	PM2.5D	PM2.5T	BCO2	NBCO2	CO2T	CH4	N2O	R	CO2e
Onsite	—	—	—	—	—	—	—	—	—	—	—	—	—	—	—	—	—	—
Daily, Summer (Max)	—	—	—	—	—	—	—	—	—	—	—	—	—	—	—	—	—	—
Daily, Winter (Max)	—	—	—	—	—	—	—	—	—	—	—	—	—	—	—	—	—	—
Off-Road Equipment	1.69	1.41	12.8	16.6	0.03	0.48	—	0.48	0.44	—	0.44	—	3,137	3,137	0.13	0.03	—	3,148

Dust From Material Movement	—	—	—	—	—	—	0.53	0.53	—	0.06	0.06	—	—	—	—	—	—	—
Onsite truck	0.01	< 0.005	0.09	0.06	< 0.005	< 0.005	11.8	11.8	< 0.005	1.18	1.18	—	33.3	33.3	< 0.005	0.01	< 0.005	35.0
Average Daily	—	—	—	—	—	—	—	—	—	—	—	—	—	—	—	—	—	—
Off-Road Equipment	0.09	0.08	0.70	0.91	< 0.005	0.03	—	0.03	0.02	—	0.02	—	172	172	0.01	< 0.005	—	172
Dust From Material Movement	—	—	—	—	—	—	0.03	0.03	—	< 0.005	< 0.005	—	—	—	—	—	—	—
Onsite truck	< 0.005	< 0.005	< 0.005	< 0.005	< 0.005	< 0.005	0.59	0.59	< 0.005	0.06	0.06	—	1.82	1.82	< 0.005	< 0.005	< 0.005	1.92
Annual	—	—	—	—	—	—	—	—	—	—	—	—	—	—	—	—	—	—
Off-Road Equipment	0.02	0.01	0.13	0.17	< 0.005	< 0.005	—	< 0.005	< 0.005	—	< 0.005	—	28.5	28.5	< 0.005	< 0.005	—	28.6
Dust From Material Movement	—	—	—	—	—	—	0.01	0.01	—	< 0.005	< 0.005	—	—	—	—	—	—	—
Onsite truck	< 0.005	< 0.005	< 0.005	< 0.005	< 0.005	< 0.005	0.11	0.11	< 0.005	0.01	0.01	—	0.30	0.30	< 0.005	< 0.005	< 0.005	0.32
Offsite	—	—	—	—	—	—	—	—	—	—	—	—	—	—	—	—	—	—
Daily, Summer (Max)	—	—	—	—	—	—	—	—	—	—	—	—	—	—	—	—	—	—
Daily, Winter (Max)	—	—	—	—	—	—	—	—	—	—	—	—	—	—	—	—	—	—
Worker	0.09	0.08	0.07	0.91	0.00	0.00	0.25	0.25	0.00	0.06	0.06	—	229	229	0.01	0.01	0.02	232
Vendor	0.02	0.01	0.33	0.16	< 0.005	< 0.005	0.07	0.07	< 0.005	0.02	0.02	—	260	260	0.01	0.04	0.01	272
Hauling	0.20	0.04	2.63	1.26	0.01	0.03	0.56	0.58	0.03	0.15	0.18	—	2,059	2,059	0.17	0.33	0.10	2,160

Average Daily	—	—	—	—	—	—	—	—	—	—	—	—	—	—	—	—	—	—
Worker	< 0.005	< 0.005	< 0.005	0.05	0.00	0.00	0.01	0.01	0.00	< 0.005	< 0.005	—	12.7	12.7	< 0.005	< 0.005	0.02	12.9
Vendor	< 0.005	< 0.005	0.02	0.01	< 0.005	< 0.005	< 0.005	< 0.005	< 0.005	< 0.005	< 0.005	—	14.2	14.2	< 0.005	< 0.005	0.01	14.9
Hauling	0.01	< 0.005	0.14	0.07	< 0.005	< 0.005	0.03	0.03	< 0.005	0.01	0.01	—	113	113	0.01	0.02	0.10	118
Annual	—	—	—	—	—	—	—	—	—	—	—	—	—	—	—	—	—	—
Worker	< 0.005	< 0.005	< 0.005	0.01	0.00	0.00	< 0.005	< 0.005	0.00	< 0.005	< 0.005	—	2.10	2.10	< 0.005	< 0.005	< 0.005	2.13
Vendor	< 0.005	< 0.005	< 0.005	< 0.005	< 0.005	< 0.005	< 0.005	< 0.005	< 0.005	< 0.005	< 0.005	—	2.36	2.36	< 0.005	< 0.005	< 0.005	2.47
Hauling	< 0.005	< 0.005	0.03	0.01	< 0.005	< 0.005	0.01	0.01	< 0.005	< 0.005	< 0.005	—	18.7	18.7	< 0.005	< 0.005	0.02	19.6

3.4. Site Preparation (2027) - Mitigated

Criteria Pollutants (lb/day for daily, ton/yr for annual) and GHGs (lb/day for daily, MT/yr for annual)

Location	TOG	ROG	NOx	CO	SO2	PM10E	PM10D	PM10T	PM2.5E	PM2.5D	PM2.5T	BCO2	NBCO2	CO2T	CH4	N2O	R	CO2e
Onsite	—	—	—	—	—	—	—	—	—	—	—	—	—	—	—	—	—	—
Daily, Summer (Max)	—	—	—	—	—	—	—	—	—	—	—	—	—	—	—	—	—	—
Daily, Winter (Max)	—	—	—	—	—	—	—	—	—	—	—	—	—	—	—	—	—	—
Off-Road Equipment	1.69	1.41	12.8	16.6	0.03	0.48	—	0.48	0.44	—	0.44	—	3,137	3,137	0.13	0.03	—	3,148
Dust From Material Movement	—	—	—	—	—	—	0.21	0.21	—	0.02	0.02	—	—	—	—	—	—	—
Onsite truck	0.01	< 0.005	0.09	0.06	< 0.005	< 0.005	11.8	11.8	< 0.005	1.18	1.18	—	33.3	33.3	< 0.005	0.01	< 0.005	35.0
Average Daily	—	—	—	—	—	—	—	—	—	—	—	—	—	—	—	—	—	—
Off-Road Equipment	0.09	0.08	0.70	0.91	< 0.005	0.03	—	0.03	0.02	—	0.02	—	172	172	0.01	< 0.005	—	172

Dust From Material Movement	—	—	—	—	—	—	0.01	0.01	—	< 0.005	< 0.005	—	—	—	—	—	—	—
Onsite truck	< 0.005	< 0.005	< 0.005	< 0.005	< 0.005	< 0.005	0.59	0.59	< 0.005	0.06	0.06	—	1.82	1.82	< 0.005	< 0.005	< 0.005	1.92
Annual	—	—	—	—	—	—	—	—	—	—	—	—	—	—	—	—	—	—
Off-Road Equipment	0.02	0.01	0.13	0.17	< 0.005	< 0.005	—	< 0.005	< 0.005	—	< 0.005	—	28.5	28.5	< 0.005	< 0.005	—	28.6
Dust From Material Movement	—	—	—	—	—	—	< 0.005	< 0.005	—	< 0.005	< 0.005	—	—	—	—	—	—	—
Onsite truck	< 0.005	< 0.005	< 0.005	< 0.005	< 0.005	< 0.005	0.11	0.11	< 0.005	0.01	0.01	—	0.30	0.30	< 0.005	< 0.005	< 0.005	0.32
Offsite	—	—	—	—	—	—	—	—	—	—	—	—	—	—	—	—	—	—
Daily, Summer (Max)	—	—	—	—	—	—	—	—	—	—	—	—	—	—	—	—	—	—
Daily, Winter (Max)	—	—	—	—	—	—	—	—	—	—	—	—	—	—	—	—	—	—
Worker	0.09	0.08	0.07	0.91	0.00	0.00	0.25	0.25	0.00	0.06	0.06	—	229	229	0.01	0.01	0.02	232
Vendor	0.02	0.01	0.33	0.16	< 0.005	< 0.005	0.07	0.07	< 0.005	0.02	0.02	—	260	260	0.01	0.04	0.01	272
Hauling	0.20	0.04	2.63	1.26	0.01	0.03	0.56	0.58	0.03	0.15	0.18	—	2,059	2,059	0.17	0.33	0.10	2,160
Average Daily	—	—	—	—	—	—	—	—	—	—	—	—	—	—	—	—	—	—
Worker	< 0.005	< 0.005	< 0.005	0.05	0.00	0.00	0.01	0.01	0.00	< 0.005	< 0.005	—	12.7	12.7	< 0.005	< 0.005	0.02	12.9
Vendor	< 0.005	< 0.005	0.02	0.01	< 0.005	< 0.005	< 0.005	< 0.005	< 0.005	< 0.005	< 0.005	—	14.2	14.2	< 0.005	< 0.005	0.01	14.9
Hauling	0.01	< 0.005	0.14	0.07	< 0.005	< 0.005	0.03	0.03	< 0.005	0.01	0.01	—	113	113	0.01	0.02	0.10	118
Annual	—	—	—	—	—	—	—	—	—	—	—	—	—	—	—	—	—	—
Worker	< 0.005	< 0.005	< 0.005	0.01	0.00	0.00	< 0.005	< 0.005	0.00	< 0.005	< 0.005	—	2.10	2.10	< 0.005	< 0.005	< 0.005	2.13
Vendor	< 0.005	< 0.005	< 0.005	< 0.005	< 0.005	< 0.005	< 0.005	< 0.005	< 0.005	< 0.005	< 0.005	—	2.36	2.36	< 0.005	< 0.005	< 0.005	2.47

Hauling	< 0.005	< 0.005	0.03	0.01	< 0.005	< 0.005	0.01	0.01	< 0.005	< 0.005	< 0.005	—	18.7	18.7	< 0.005	< 0.005	0.02	19.6

3.5. Overhead Pole Installation (2027) - Unmitigated

Criteria Pollutants (lb/day for daily, ton/yr for annual) and GHGs (lb/day for daily, MT/yr for annual)

Location	TOG	ROG	NOx	CO	SO2	PM10E	PM10D	PM10T	PM2.5E	PM2.5D	PM2.5T	BCO2	NBCO2	CO2T	CH4	N2O	R	CO2e
Onsite	—	—	—	—	—	—	—	—	—	—	—	—	—	—	—	—	—	—
Daily, Summer (Max)	—	—	—	—	—	—	—	—	—	—	—	—	—	—	—	—	—	—
Off-Road Equipment	1.84	1.54	14.5	18.5	0.03	0.43	—	0.43	0.40	—	0.40	—	3,338	3,338	0.14	0.03	—	3,350
Onsite truck	0.01	< 0.005	0.08	0.05	< 0.005	< 0.005	11.8	11.8	< 0.005	1.18	1.18	—	33.2	33.2	< 0.005	0.01	0.05	35.0
Daily, Winter (Max)	—	—	—	—	—	—	—	—	—	—	—	—	—	—	—	—	—	—
Off-Road Equipment	1.84	1.54	14.5	18.5	0.03	0.43	—	0.43	0.40	—	0.40	—	3,338	3,338	0.14	0.03	—	3,350
Onsite truck	0.01	< 0.005	0.09	0.06	< 0.005	< 0.005	11.8	11.8	< 0.005	1.18	1.18	—	33.3	33.3	< 0.005	0.01	< 0.005	35.0
Average Daily	—	—	—	—	—	—	—	—	—	—	—	—	—	—	—	—	—	—
Off-Road Equipment	0.40	0.34	3.17	4.06	0.01	0.09	—	0.09	0.09	—	0.09	—	732	732	0.03	0.01	—	734
Onsite truck	< 0.005	< 0.005	0.02	0.01	< 0.005	< 0.005	2.35	2.35	< 0.005	0.23	0.23	—	7.29	7.29	< 0.005	< 0.005	0.01	7.67
Annual	—	—	—	—	—	—	—	—	—	—	—	—	—	—	—	—	—	—
Off-Road Equipment	0.07	0.06	0.58	0.74	< 0.005	0.02	—	0.02	0.02	—	0.02	—	121	121	< 0.005	< 0.005	—	122
Onsite truck	< 0.005	< 0.005	< 0.005	< 0.005	< 0.005	< 0.005	0.43	0.43	< 0.005	0.04	0.04	—	1.21	1.21	< 0.005	< 0.005	< 0.005	1.27
Offsite	—	—	—	—	—	—	—	—	—	—	—	—	—	—	—	—	—	—

Daily, Summer (Max)	—	—	—	—	—	—	—	—	—	—	—	—	—	—	—	—	—	—
Worker	0.15	0.14	0.10	1.78	0.00	0.00	0.41	0.41	0.00	0.10	0.10	—	413	413	0.01	0.02	1.39	419
Vendor	0.02	0.01	0.31	0.16	< 0.005	< 0.005	0.07	0.07	< 0.005	0.02	0.02	—	260	260	0.01	0.04	0.57	272
Hauling	0.13	0.03	1.66	0.83	0.01	0.02	0.37	0.39	0.02	0.10	0.12	—	1,372	1,372	0.11	0.22	2.69	1,442
Daily, Winter (Max)	—	—	—	—	—	—	—	—	—	—	—	—	—	—	—	—	—	—
Worker	0.15	0.13	0.12	1.52	0.00	0.00	0.41	0.41	0.00	0.10	0.10	—	382	382	0.01	0.02	0.04	387
Vendor	0.02	0.01	0.33	0.16	< 0.005	< 0.005	0.07	0.07	< 0.005	0.02	0.02	—	260	260	0.01	0.04	0.01	272
Hauling	0.13	0.03	1.76	0.84	0.01	0.02	0.37	0.39	0.02	0.10	0.12	—	1,372	1,372	0.11	0.22	0.07	1,440
Average Daily	—	—	—	—	—	—	—	—	—	—	—	—	—	—	—	—	—	—
Worker	0.03	0.03	0.03	0.33	0.00	0.00	0.09	0.09	0.00	0.02	0.02	—	84.7	84.7	< 0.005	< 0.005	0.13	86.0
Vendor	0.01	< 0.005	0.07	0.03	< 0.005	< 0.005	0.02	0.02	< 0.005	< 0.005	0.01	—	56.9	56.9	< 0.005	0.01	0.05	59.6
Hauling	0.03	0.01	0.38	0.18	< 0.005	< 0.005	0.08	0.08	< 0.005	0.02	0.03	—	301	301	0.02	0.05	0.25	316
Annual	—	—	—	—	—	—	—	—	—	—	—	—	—	—	—	—	—	—
Worker	0.01	0.01	< 0.005	0.06	0.00	0.00	0.02	0.02	0.00	< 0.005	< 0.005	—	14.0	14.0	< 0.005	< 0.005	0.02	14.2
Vendor	< 0.005	< 0.005	0.01	0.01	< 0.005	< 0.005	< 0.005	< 0.005	< 0.005	< 0.005	< 0.005	—	9.43	9.43	< 0.005	< 0.005	0.01	9.87
Hauling	0.01	< 0.005	0.07	0.03	< 0.005	< 0.005	0.01	0.02	< 0.005	< 0.005	< 0.005	—	49.8	49.8	< 0.005	0.01	0.04	52.3

3.6. Overhead Pole Installation (2027) - Mitigated

Criteria Pollutants (lb/day for daily, ton/yr for annual) and GHGs (lb/day for daily, MT/yr for annual)

Location	TOG	ROG	NOx	CO	SO2	PM10E	PM10D	PM10T	PM2.5E	PM2.5D	PM2.5T	BCO2	NBCO2	CO2T	CH4	N2O	R	CO2e
Onsite	—	—	—	—	—	—	—	—	—	—	—	—	—	—	—	—	—	—
Daily, Summer (Max)	—	—	—	—	—	—	—	—	—	—	—	—	—	—	—	—	—	—

Off-Road Equipment	1.84	1.54	14.5	18.5	0.03	0.43	—	0.43	0.40	—	0.40	—	3,338	3,338	0.14	0.03	—	3,350
Onsite truck	0.01	< 0.005	0.08	0.05	< 0.005	< 0.005	11.8	11.8	< 0.005	1.18	1.18	—	33.2	33.2	< 0.005	0.01	0.05	35.0
Daily, Winter (Max)	—	—	—	—	—	—	—	—	—	—	—	—	—	—	—	—	—	—
Off-Road Equipment	1.84	1.54	14.5	18.5	0.03	0.43	—	0.43	0.40	—	0.40	—	3,338	3,338	0.14	0.03	—	3,350
Onsite truck	0.01	< 0.005	0.09	0.06	< 0.005	< 0.005	11.8	11.8	< 0.005	1.18	1.18	—	33.3	33.3	< 0.005	0.01	< 0.005	35.0
Average Daily	—	—	—	—	—	—	—	—	—	—	—	—	—	—	—	—	—	—
Off-Road Equipment	0.40	0.34	3.17	4.06	0.01	0.09	—	0.09	0.09	—	0.09	—	732	732	0.03	0.01	—	734
Onsite truck	< 0.005	< 0.005	0.02	0.01	< 0.005	< 0.005	2.35	2.35	< 0.005	0.23	0.23	—	7.29	7.29	< 0.005	< 0.005	0.01	7.67
Annual	—	—	—	—	—	—	—	—	—	—	—	—	—	—	—	—	—	—
Off-Road Equipment	0.07	0.06	0.58	0.74	< 0.005	0.02	—	0.02	0.02	—	0.02	—	121	121	< 0.005	< 0.005	—	122
Onsite truck	< 0.005	< 0.005	< 0.005	< 0.005	< 0.005	< 0.005	0.43	0.43	< 0.005	0.04	0.04	—	1.21	1.21	< 0.005	< 0.005	< 0.005	1.27
Offsite	—	—	—	—	—	—	—	—	—	—	—	—	—	—	—	—	—	—
Daily, Summer (Max)	—	—	—	—	—	—	—	—	—	—	—	—	—	—	—	—	—	—
Worker	0.15	0.14	0.10	1.78	0.00	0.00	0.41	0.41	0.00	0.10	0.10	—	413	413	0.01	0.02	1.39	419
Vendor	0.02	0.01	0.31	0.16	< 0.005	< 0.005	0.07	0.07	< 0.005	0.02	0.02	—	260	260	0.01	0.04	0.57	272
Hauling	0.13	0.03	1.66	0.83	0.01	0.02	0.37	0.39	0.02	0.10	0.12	—	1,372	1,372	0.11	0.22	2.69	1,442
Daily, Winter (Max)	—	—	—	—	—	—	—	—	—	—	—	—	—	—	—	—	—	—
Worker	0.15	0.13	0.12	1.52	0.00	0.00	0.41	0.41	0.00	0.10	0.10	—	382	382	0.01	0.02	0.04	387

Vendor	0.02	0.01	0.33	0.16	< 0.005	< 0.005	0.07	0.07	< 0.005	0.02	0.02	—	260	260	0.01	0.04	0.01	272
Hauling	0.13	0.03	1.76	0.84	0.01	0.02	0.37	0.39	0.02	0.10	0.12	—	1,372	1,372	0.11	0.22	0.07	1,440
Average Daily	—	—	—	—	—	—	—	—	—	—	—	—	—	—	—	—	—	—
Worker	0.03	0.03	0.03	0.33	0.00	0.00	0.09	0.09	0.00	0.02	0.02	—	84.7	84.7	< 0.005	< 0.005	0.13	86.0
Vendor	0.01	< 0.005	0.07	0.03	< 0.005	< 0.005	0.02	0.02	< 0.005	< 0.005	0.01	—	56.9	56.9	< 0.005	0.01	0.05	59.6
Hauling	0.03	0.01	0.38	0.18	< 0.005	< 0.005	0.08	0.08	< 0.005	0.02	0.03	—	301	301	0.02	0.05	0.25	316
Annual	—	—	—	—	—	—	—	—	—	—	—	—	—	—	—	—	—	—
Worker	0.01	0.01	< 0.005	0.06	0.00	0.00	0.02	0.02	0.00	< 0.005	< 0.005	—	14.0	14.0	< 0.005	< 0.005	0.02	14.2
Vendor	< 0.005	< 0.005	0.01	0.01	< 0.005	< 0.005	< 0.005	< 0.005	< 0.005	< 0.005	< 0.005	—	9.43	9.43	< 0.005	< 0.005	0.01	9.87
Hauling	0.01	< 0.005	0.07	0.03	< 0.005	< 0.005	0.01	0.02	< 0.005	< 0.005	< 0.005	—	49.8	49.8	< 0.005	0.01	0.04	52.3

3.7. Underground Vault Instalation (2027) - Unmitigated

Criteria Pollutants (lb/day for daily, ton/yr for annual) and GHGs (lb/day for daily, MT/yr for annual)

Location	TOG	ROG	NOx	CO	SO2	PM10E	PM10D	PM10T	PM2.5E	PM2.5D	PM2.5T	BCO2	NBCO2	CO2T	CH4	N2O	R	CO2e
Onsite	—	—	—	—	—	—	—	—	—	—	—	—	—	—	—	—	—	—
Daily, Summer (Max)	—	—	—	—	—	—	—	—	—	—	—	—	—	—	—	—	—	—
Off-Road Equipment	1.84	1.54	14.5	18.5	0.03	0.43	—	0.43	0.40	—	0.40	—	3,338	3,338	0.14	0.03	—	3,350
Onsite truck	0.01	< 0.005	0.08	0.05	< 0.005	< 0.005	11.8	11.8	< 0.005	1.18	1.18	—	33.2	33.2	< 0.005	0.01	0.05	35.0
Daily, Winter (Max)	—	—	—	—	—	—	—	—	—	—	—	—	—	—	—	—	—	—
Off-Road Equipment	1.84	1.54	14.5	18.5	0.03	0.43	—	0.43	0.40	—	0.40	—	3,338	3,338	0.14	0.03	—	3,350
Onsite truck	0.01	< 0.005	0.09	0.06	< 0.005	< 0.005	11.8	11.8	< 0.005	1.18	1.18	—	33.3	33.3	< 0.005	0.01	< 0.005	35.0

Average Daily	—	—	—	—	—	—	—	—	—	—	—	—	—	—	—	—	—	—
Off-Road Equipment	0.40	0.34	3.17	4.06	0.01	0.09	—	0.09	0.09	—	0.09	—	732	732	0.03	0.01	—	734
Onsite truck	< 0.005	< 0.005	0.02	0.01	< 0.005	< 0.005	2.35	2.35	< 0.005	0.23	0.23	—	7.29	7.29	< 0.005	< 0.005	0.01	7.67
Annual	—	—	—	—	—	—	—	—	—	—	—	—	—	—	—	—	—	—
Off-Road Equipment	0.07	0.06	0.58	0.74	< 0.005	0.02	—	0.02	0.02	—	0.02	—	121	121	< 0.005	< 0.005	—	122
Onsite truck	< 0.005	< 0.005	< 0.005	< 0.005	< 0.005	< 0.005	0.43	0.43	< 0.005	0.04	0.04	—	1.21	1.21	< 0.005	< 0.005	< 0.005	1.27
Offsite	—	—	—	—	—	—	—	—	—	—	—	—	—	—	—	—	—	—
Daily, Summer (Max)	—	—	—	—	—	—	—	—	—	—	—	—	—	—	—	—	—	—
Worker	0.15	0.14	0.10	1.78	0.00	0.00	0.41	0.41	0.00	0.10	0.10	—	413	413	0.01	0.02	1.39	419
Vendor	0.02	0.01	0.31	0.16	< 0.005	< 0.005	0.07	0.07	< 0.005	0.02	0.02	—	260	260	0.01	0.04	0.57	272
Hauling	0.13	0.03	1.66	0.83	0.01	0.02	0.37	0.39	0.02	0.10	0.12	—	1,372	1,372	0.11	0.22	2.69	1,442
Daily, Winter (Max)	—	—	—	—	—	—	—	—	—	—	—	—	—	—	—	—	—	—
Worker	0.15	0.13	0.12	1.52	0.00	0.00	0.41	0.41	0.00	0.10	0.10	—	382	382	0.01	0.02	0.04	387
Vendor	0.02	0.01	0.33	0.16	< 0.005	< 0.005	0.07	0.07	< 0.005	0.02	0.02	—	260	260	0.01	0.04	0.01	272
Hauling	0.13	0.03	1.76	0.84	0.01	0.02	0.37	0.39	0.02	0.10	0.12	—	1,372	1,372	0.11	0.22	0.07	1,440
Average Daily	—	—	—	—	—	—	—	—	—	—	—	—	—	—	—	—	—	—
Worker	0.03	0.03	0.03	0.33	0.00	0.00	0.09	0.09	0.00	0.02	0.02	—	84.7	84.7	< 0.005	< 0.005	0.13	86.0
Vendor	0.01	< 0.005	0.07	0.03	< 0.005	< 0.005	0.02	0.02	< 0.005	< 0.005	0.01	—	56.9	56.9	< 0.005	0.01	0.05	59.6
Hauling	0.03	0.01	0.38	0.18	< 0.005	< 0.005	0.08	0.08	< 0.005	0.02	0.03	—	301	301	0.02	0.05	0.25	316
Annual	—	—	—	—	—	—	—	—	—	—	—	—	—	—	—	—	—	—
Worker	0.01	0.01	< 0.005	0.06	0.00	0.00	0.02	0.02	0.00	< 0.005	< 0.005	—	14.0	14.0	< 0.005	< 0.005	0.02	14.2

Vendor	< 0.005	< 0.005	0.01	0.01	< 0.005	< 0.005	< 0.005	< 0.005	< 0.005	< 0.005	< 0.005	—	9.43	9.43	< 0.005	< 0.005	0.01	9.87
Hauling	0.01	< 0.005	0.07	0.03	< 0.005	< 0.005	0.01	0.02	< 0.005	< 0.005	< 0.005	—	49.8	49.8	< 0.005	0.01	0.04	52.3

3.8. Underground Vault Instalation (2027) - Mitigated

Criteria Pollutants (lb/day for daily, ton/yr for annual) and GHGs (lb/day for daily, MT/yr for annual)

Location	TOG	ROG	NOx	CO	SO2	PM10E	PM10D	PM10T	PM2.5E	PM2.5D	PM2.5T	BCO2	NBCO2	CO2T	CH4	N2O	R	CO2e
Onsite	—	—	—	—	—	—	—	—	—	—	—	—	—	—	—	—	—	—
Daily, Summer (Max)	—	—	—	—	—	—	—	—	—	—	—	—	—	—	—	—	—	—
Off-Road Equipment	1.84	1.54	14.5	18.5	0.03	0.43	—	0.43	0.40	—	0.40	—	3,338	3,338	0.14	0.03	—	3,350
Onsite truck	0.01	< 0.005	0.08	0.05	< 0.005	< 0.005	11.8	11.8	< 0.005	1.18	1.18	—	33.2	33.2	< 0.005	0.01	0.05	35.0
Daily, Winter (Max)	—	—	—	—	—	—	—	—	—	—	—	—	—	—	—	—	—	—
Off-Road Equipment	1.84	1.54	14.5	18.5	0.03	0.43	—	0.43	0.40	—	0.40	—	3,338	3,338	0.14	0.03	—	3,350
Onsite truck	0.01	< 0.005	0.09	0.06	< 0.005	< 0.005	11.8	11.8	< 0.005	1.18	1.18	—	33.3	33.3	< 0.005	0.01	< 0.005	35.0
Average Daily	—	—	—	—	—	—	—	—	—	—	—	—	—	—	—	—	—	—
Off-Road Equipment	0.40	0.34	3.17	4.06	0.01	0.09	—	0.09	0.09	—	0.09	—	732	732	0.03	0.01	—	734
Onsite truck	< 0.005	< 0.005	0.02	0.01	< 0.005	< 0.005	2.35	2.35	< 0.005	0.23	0.23	—	7.29	7.29	< 0.005	< 0.005	0.01	7.67
Annual	—	—	—	—	—	—	—	—	—	—	—	—	—	—	—	—	—	—
Off-Road Equipment	0.07	0.06	0.58	0.74	< 0.005	0.02	—	0.02	0.02	—	0.02	—	121	121	< 0.005	< 0.005	—	122
Onsite truck	< 0.005	< 0.005	< 0.005	< 0.005	< 0.005	< 0.005	0.43	0.43	< 0.005	0.04	0.04	—	1.21	1.21	< 0.005	< 0.005	< 0.005	1.27

Offsite	—	—	—	—	—	—	—	—	—	—	—	—	—	—	—	—	—	—
Daily, Summer (Max)	—	—	—	—	—	—	—	—	—	—	—	—	—	—	—	—	—	—
Worker	0.15	0.14	0.10	1.78	0.00	0.00	0.41	0.41	0.00	0.10	0.10	—	413	413	0.01	0.02	1.39	419
Vendor	0.02	0.01	0.31	0.16	< 0.005	< 0.005	0.07	0.07	< 0.005	0.02	0.02	—	260	260	0.01	0.04	0.57	272
Hauling	0.13	0.03	1.66	0.83	0.01	0.02	0.37	0.39	0.02	0.10	0.12	—	1,372	1,372	0.11	0.22	2.69	1,442
Daily, Winter (Max)	—	—	—	—	—	—	—	—	—	—	—	—	—	—	—	—	—	—
Worker	0.15	0.13	0.12	1.52	0.00	0.00	0.41	0.41	0.00	0.10	0.10	—	382	382	0.01	0.02	0.04	387
Vendor	0.02	0.01	0.33	0.16	< 0.005	< 0.005	0.07	0.07	< 0.005	0.02	0.02	—	260	260	0.01	0.04	0.01	272
Hauling	0.13	0.03	1.76	0.84	0.01	0.02	0.37	0.39	0.02	0.10	0.12	—	1,372	1,372	0.11	0.22	0.07	1,440
Average Daily	—	—	—	—	—	—	—	—	—	—	—	—	—	—	—	—	—	—
Worker	0.03	0.03	0.03	0.33	0.00	0.00	0.09	0.09	0.00	0.02	0.02	—	84.7	84.7	< 0.005	< 0.005	0.13	86.0
Vendor	0.01	< 0.005	0.07	0.03	< 0.005	< 0.005	0.02	0.02	< 0.005	< 0.005	0.01	—	56.9	56.9	< 0.005	0.01	0.05	59.6
Hauling	0.03	0.01	0.38	0.18	< 0.005	< 0.005	0.08	0.08	< 0.005	0.02	0.03	—	301	301	0.02	0.05	0.25	316
Annual	—	—	—	—	—	—	—	—	—	—	—	—	—	—	—	—	—	—
Worker	0.01	0.01	< 0.005	0.06	0.00	0.00	0.02	0.02	0.00	< 0.005	< 0.005	—	14.0	14.0	< 0.005	< 0.005	0.02	14.2
Vendor	< 0.005	< 0.005	0.01	0.01	< 0.005	< 0.005	< 0.005	< 0.005	< 0.005	< 0.005	< 0.005	—	9.43	9.43	< 0.005	< 0.005	0.01	9.87
Hauling	0.01	< 0.005	0.07	0.03	< 0.005	< 0.005	0.01	0.02	< 0.005	< 0.005	< 0.005	—	49.8	49.8	< 0.005	0.01	0.04	52.3

3.9. Paving and Cleanup (2027) - Unmitigated

Criteria Pollutants (lb/day for daily, ton/yr for annual) and GHGs (lb/day for daily, MT/yr for annual)

Location	TOG	ROG	NOx	CO	SO2	PM10E	PM10D	PM10T	PM2.5E	PM2.5D	PM2.5T	BCO2	NBCO2	CO2T	CH4	N2O	R	CO2e
Onsite	—	—	—	—	—	—	—	—	—	—	—	—	—	—	—	—	—	—
Daily, Summer (Max)	—	—	—	—	—	—	—	—	—	—	—	—	—	—	—	—	—	—

Daily, Winter (Max)	—	—	—	—	—	—	—	—	—	—	—	—	—	—	—	—	—	—
Off-Road Equipment	1.24	1.04	9.46	13.7	0.02	0.37	—	0.37	0.34	—	0.34	—	2,036	2,036	0.08	0.02	—	2,043
Architectural Coatings	—	4.04	—	—	—	—	—	—	—	—	—	—	—	—	—	—	—	—
Paving	—	0.70	—	—	—	—	—	—	—	—	—	—	—	—	—	—	—	—
Onsite truck	0.01	< 0.005	0.09	0.06	< 0.005	< 0.005	11.8	11.8	< 0.005	1.18	1.18	—	33.3	33.3	< 0.005	0.01	< 0.005	35.0
Average Daily	—	—	—	—	—	—	—	—	—	—	—	—	—	—	—	—	—	—
Off-Road Equipment	0.04	0.03	0.28	0.40	< 0.005	0.01	—	0.01	0.01	—	0.01	—	59.8	59.8	< 0.005	< 0.005	—	60.0
Architectural Coatings	—	0.12	—	—	—	—	—	—	—	—	—	—	—	—	—	—	—	—
Paving	—	0.02	—	—	—	—	—	—	—	—	—	—	—	—	—	—	—	—
Onsite truck	< 0.005	< 0.005	< 0.005	< 0.005	< 0.005	< 0.005	0.31	0.31	< 0.005	0.03	0.03	—	0.98	0.98	< 0.005	< 0.005	< 0.005	1.03
Annual	—	—	—	—	—	—	—	—	—	—	—	—	—	—	—	—	—	—
Off-Road Equipment	0.01	0.01	0.05	0.07	< 0.005	< 0.005	—	< 0.005	< 0.005	—	< 0.005	—	9.89	9.89	< 0.005	< 0.005	—	9.93
Architectural Coatings	—	0.02	—	—	—	—	—	—	—	—	—	—	—	—	—	—	—	—
Paving	—	< 0.005	—	—	—	—	—	—	—	—	—	—	—	—	—	—	—	—
Onsite truck	< 0.005	< 0.005	< 0.005	< 0.005	< 0.005	< 0.005	0.06	0.06	< 0.005	0.01	0.01	—	0.16	0.16	< 0.005	< 0.005	< 0.005	0.17
Offsite	—	—	—	—	—	—	—	—	—	—	—	—	—	—	—	—	—	—
Daily, Summer (Max)	—	—	—	—	—	—	—	—	—	—	—	—	—	—	—	—	—	—

Daily, Winter (Max)	—	—	—	—	—	—	—	—	—	—	—	—	—	—	—	—	—	—
Worker	0.15	0.13	0.12	1.52	0.00	0.00	0.41	0.41	0.00	0.10	0.10	—	382	382	0.01	0.02	0.04	387
Vendor	0.02	0.01	0.33	0.16	< 0.005	< 0.005	0.07	0.07	< 0.005	0.02	0.02	—	260	260	0.01	0.04	0.01	272
Hauling	0.13	0.03	1.76	0.84	0.01	0.02	0.37	0.39	0.02	0.10	0.12	—	1,372	1,372	0.11	0.22	0.07	1,440
Average Daily	—	—	—	—	—	—	—	—	—	—	—	—	—	—	—	—	—	—
Worker	< 0.005	< 0.005	< 0.005	0.04	0.00	0.00	0.01	0.01	0.00	< 0.005	< 0.005	—	11.3	11.3	< 0.005	< 0.005	0.02	11.5
Vendor	< 0.005	< 0.005	0.01	< 0.005	< 0.005	< 0.005	< 0.005	< 0.005	< 0.005	< 0.005	< 0.005	—	7.63	7.63	< 0.005	< 0.005	0.01	7.98
Hauling	< 0.005	< 0.005	0.05	0.02	< 0.005	< 0.005	0.01	0.01	< 0.005	< 0.005	< 0.005	—	40.3	40.3	< 0.005	0.01	0.03	42.3
Annual	—	—	—	—	—	—	—	—	—	—	—	—	—	—	—	—	—	—
Worker	< 0.005	< 0.005	< 0.005	0.01	0.00	0.00	< 0.005	< 0.005	0.00	< 0.005	< 0.005	—	1.88	1.88	< 0.005	< 0.005	< 0.005	1.91
Vendor	< 0.005	< 0.005	< 0.005	< 0.005	< 0.005	< 0.005	< 0.005	< 0.005	< 0.005	< 0.005	< 0.005	—	1.26	1.26	< 0.005	< 0.005	< 0.005	1.32
Hauling	< 0.005	< 0.005	0.01	< 0.005	< 0.005	< 0.005	< 0.005	< 0.005	< 0.005	< 0.005	< 0.005	—	6.67	6.67	< 0.005	< 0.005	0.01	7.00

3.10. Paving and Cleanup (2027) - Mitigated

Criteria Pollutants (lb/day for daily, ton/yr for annual) and GHGs (lb/day for daily, MT/yr for annual)

Location	TOG	ROG	NOx	CO	SO2	PM10E	PM10D	PM10T	PM2.5E	PM2.5D	PM2.5T	BCO2	NBCO2	CO2T	CH4	N2O	R	CO2e
Onsite	—	—	—	—	—	—	—	—	—	—	—	—	—	—	—	—	—	—
Daily, Summer (Max)	—	—	—	—	—	—	—	—	—	—	—	—	—	—	—	—	—	—
Daily, Winter (Max)	—	—	—	—	—	—	—	—	—	—	—	—	—	—	—	—	—	—
Off-Road Equipment	1.24	1.04	9.46	13.7	0.02	0.37	—	0.37	0.34	—	0.34	—	2,036	2,036	0.08	0.02	—	2,043
Architectural Coatings	—	4.04	—	—	—	—	—	—	—	—	—	—	—	—	—	—	—	—

Paving	—	0.70	—	—	—	—	—	—	—	—	—	—	—	—	—	—	—	—
Onsite truck	0.01	< 0.005	0.09	0.06	< 0.005	< 0.005	11.8	11.8	< 0.005	1.18	1.18	—	33.3	33.3	< 0.005	0.01	< 0.005	35.0
Average Daily	—	—	—	—	—	—	—	—	—	—	—	—	—	—	—	—	—	—
Off-Road Equipment	0.04	0.03	0.28	0.40	< 0.005	0.01	—	0.01	0.01	—	0.01	—	59.8	59.8	< 0.005	< 0.005	—	60.0
Architectural Coatings	—	0.12	—	—	—	—	—	—	—	—	—	—	—	—	—	—	—	—
Paving	—	0.02	—	—	—	—	—	—	—	—	—	—	—	—	—	—	—	—
Onsite truck	< 0.005	< 0.005	< 0.005	< 0.005	< 0.005	< 0.005	0.31	0.31	< 0.005	0.03	0.03	—	0.98	0.98	< 0.005	< 0.005	< 0.005	1.03
Annual	—	—	—	—	—	—	—	—	—	—	—	—	—	—	—	—	—	—
Off-Road Equipment	0.01	0.01	0.05	0.07	< 0.005	< 0.005	—	< 0.005	< 0.005	—	< 0.005	—	9.89	9.89	< 0.005	< 0.005	—	9.93
Architectural Coatings	—	0.02	—	—	—	—	—	—	—	—	—	—	—	—	—	—	—	—
Paving	—	< 0.005	—	—	—	—	—	—	—	—	—	—	—	—	—	—	—	—
Onsite truck	< 0.005	< 0.005	< 0.005	< 0.005	< 0.005	< 0.005	0.06	0.06	< 0.005	0.01	0.01	—	0.16	0.16	< 0.005	< 0.005	< 0.005	0.17
Offsite	—	—	—	—	—	—	—	—	—	—	—	—	—	—	—	—	—	—
Daily, Summer (Max)	—	—	—	—	—	—	—	—	—	—	—	—	—	—	—	—	—	—
Daily, Winter (Max)	—	—	—	—	—	—	—	—	—	—	—	—	—	—	—	—	—	—
Worker	0.15	0.13	0.12	1.52	0.00	0.00	0.41	0.41	0.00	0.10	0.10	—	382	382	0.01	0.02	0.04	387
Vendor	0.02	0.01	0.33	0.16	< 0.005	< 0.005	0.07	0.07	< 0.005	0.02	0.02	—	260	260	0.01	0.04	0.01	272
Hauling	0.13	0.03	1.76	0.84	0.01	0.02	0.37	0.39	0.02	0.10	0.12	—	1,372	1,372	0.11	0.22	0.07	1,440

Average Daily	—	—	—	—	—	—	—	—	—	—	—	—	—	—	—	—	—	—
Worker	< 0.005	< 0.005	< 0.005	0.04	0.00	0.00	0.01	0.01	0.00	< 0.005	< 0.005	—	11.3	11.3	< 0.005	< 0.005	0.02	11.5
Vendor	< 0.005	< 0.005	0.01	< 0.005	< 0.005	< 0.005	< 0.005	< 0.005	< 0.005	< 0.005	< 0.005	—	7.63	7.63	< 0.005	< 0.005	0.01	7.98
Hauling	< 0.005	< 0.005	0.05	0.02	< 0.005	< 0.005	0.01	0.01	< 0.005	< 0.005	< 0.005	—	40.3	40.3	< 0.005	0.01	0.03	42.3
Annual	—	—	—	—	—	—	—	—	—	—	—	—	—	—	—	—	—	—
Worker	< 0.005	< 0.005	< 0.005	0.01	0.00	0.00	< 0.005	< 0.005	0.00	< 0.005	< 0.005	—	1.88	1.88	< 0.005	< 0.005	< 0.005	1.91
Vendor	< 0.005	< 0.005	< 0.005	< 0.005	< 0.005	< 0.005	< 0.005	< 0.005	< 0.005	< 0.005	< 0.005	—	1.26	1.26	< 0.005	< 0.005	< 0.005	1.32
Hauling	< 0.005	< 0.005	0.01	< 0.005	< 0.005	< 0.005	< 0.005	< 0.005	< 0.005	< 0.005	< 0.005	—	6.67	6.67	< 0.005	< 0.005	0.01	7.00

3.11. Paving and Cleanup (2028) - Unmitigated

Criteria Pollutants (lb/day for daily, ton/yr for annual) and GHGs (lb/day for daily, MT/yr for annual)

Location	TOG	ROG	NOx	CO	SO2	PM10E	PM10D	PM10T	PM2.5E	PM2.5D	PM2.5T	BCO2	NBCO2	CO2T	CH4	N2O	R	CO2e
Onsite	—	—	—	—	—	—	—	—	—	—	—	—	—	—	—	—	—	—
Daily, Summer (Max)	—	—	—	—	—	—	—	—	—	—	—	—	—	—	—	—	—	—
Daily, Winter (Max)	—	—	—	—	—	—	—	—	—	—	—	—	—	—	—	—	—	—
Off-Road Equipment	1.17	0.98	9.08	13.6	0.02	0.32	—	0.32	0.29	—	0.29	—	2,036	2,036	0.08	0.02	—	2,043
Architectural Coatings	—	4.04	—	—	—	—	—	—	—	—	—	—	—	—	—	—	—	—
Paving	—	0.70	—	—	—	—	—	—	—	—	—	—	—	—	—	—	—	—
Onsite truck	0.01	< 0.005	0.09	0.05	< 0.005	< 0.005	11.8	11.8	< 0.005	1.18	1.18	—	32.5	32.5	< 0.005	0.01	< 0.005	34.2
Average Daily	—	—	—	—	—	—	—	—	—	—	—	—	—	—	—	—	—	—

Off-Road Equipment	0.06	0.05	0.48	0.72	< 0.005	0.02	—	0.02	0.02	—	0.02	—	108	108	< 0.005	< 0.005	—	108
Architectural Coatings	—	0.21	—	—	—	—	—	—	—	—	—	—	—	—	—	—	—	—
Paving	—	0.04	—	—	—	—	—	—	—	—	—	—	—	—	—	—	—	—
Onsite truck	< 0.005	< 0.005	< 0.005	< 0.005	< 0.005	< 0.005	0.57	0.57	< 0.005	0.06	0.06	—	1.72	1.72	< 0.005	< 0.005	< 0.005	1.81
Annual	—	—	—	—	—	—	—	—	—	—	—	—	—	—	—	—	—	—
Off-Road Equipment	0.01	0.01	0.09	0.13	< 0.005	< 0.005	—	< 0.005	< 0.005	—	< 0.005	—	17.8	17.8	< 0.005	< 0.005	—	17.9
Architectural Coatings	—	0.04	—	—	—	—	—	—	—	—	—	—	—	—	—	—	—	—
Paving	—	0.01	—	—	—	—	—	—	—	—	—	—	—	—	—	—	—	—
Onsite truck	< 0.005	< 0.005	< 0.005	< 0.005	< 0.005	< 0.005	0.10	0.10	< 0.005	0.01	0.01	—	0.28	0.28	< 0.005	< 0.005	< 0.005	0.30
Offsite	—	—	—	—	—	—	—	—	—	—	—	—	—	—	—	—	—	—
Daily, Summer (Max)	—	—	—	—	—	—	—	—	—	—	—	—	—	—	—	—	—	—
Daily, Winter (Max)	—	—	—	—	—	—	—	—	—	—	—	—	—	—	—	—	—	—
Worker	0.14	0.13	0.12	1.43	0.00	0.00	0.41	0.41	0.00	0.10	0.10	—	376	376	0.01	0.02	0.03	381
Vendor	0.02	0.01	0.32	0.15	< 0.005	< 0.005	0.07	0.07	< 0.005	0.02	0.02	—	254	254	0.01	0.04	0.01	265
Hauling	0.13	0.03	1.69	0.81	0.01	0.02	0.37	0.39	0.02	0.10	0.12	—	1,337	1,337	0.10	0.22	0.06	1,404
Average Daily	—	—	—	—	—	—	—	—	—	—	—	—	—	—	—	—	—	—
Worker	0.01	0.01	0.01	0.07	0.00	0.00	0.02	0.02	0.00	0.01	0.01	—	20.1	20.1	< 0.005	< 0.005	0.03	20.4
Vendor	< 0.005	< 0.005	0.02	0.01	< 0.005	< 0.005	< 0.005	< 0.005	< 0.005	< 0.005	< 0.005	—	13.4	13.4	< 0.005	< 0.005	0.01	14.0
Hauling	0.01	< 0.005	0.09	0.04	< 0.005	< 0.005	0.02	0.02	< 0.005	0.01	0.01	—	70.6	70.6	0.01	0.01	0.06	74.2

Annual	—	—	—	—	—	—	—	—	—	—	—	—	—	—	—	—	—	—
Worker	< 0.005	< 0.005	< 0.005	0.01	0.00	0.00	< 0.005	< 0.005	0.00	< 0.005	< 0.005	—	3.32	3.32	< 0.005	< 0.005	< 0.005	3.37
Vendor	< 0.005	< 0.005	< 0.005	< 0.005	< 0.005	< 0.005	< 0.005	< 0.005	< 0.005	< 0.005	< 0.005	—	2.22	2.22	< 0.005	< 0.005	< 0.005	2.32
Hauling	< 0.005	< 0.005	0.02	0.01	< 0.005	< 0.005	< 0.005	< 0.005	< 0.005	< 0.005	< 0.005	—	11.7	11.7	< 0.005	< 0.005	0.01	12.3

3.12. Paving and Cleanup (2028) - Mitigated

Criteria Pollutants (lb/day for daily, ton/yr for annual) and GHGs (lb/day for daily, MT/yr for annual)

Location	TOG	ROG	NOx	CO	SO2	PM10E	PM10D	PM10T	PM2.5E	PM2.5D	PM2.5T	BCO2	NBCO2	CO2T	CH4	N2O	R	CO2e
Onsite	—	—	—	—	—	—	—	—	—	—	—	—	—	—	—	—	—	—
Daily, Summer (Max)	—	—	—	—	—	—	—	—	—	—	—	—	—	—	—	—	—	—
Daily, Winter (Max)	—	—	—	—	—	—	—	—	—	—	—	—	—	—	—	—	—	—
Off-Road Equipment	1.17	0.98	9.08	13.6	0.02	0.32	—	0.32	0.29	—	0.29	—	2,036	2,036	0.08	0.02	—	2,043
Architectural Coatings	—	4.04	—	—	—	—	—	—	—	—	—	—	—	—	—	—	—	—
Paving	—	0.70	—	—	—	—	—	—	—	—	—	—	—	—	—	—	—	—
Onsite truck	0.01	< 0.005	0.09	0.05	< 0.005	< 0.005	11.8	11.8	< 0.005	1.18	1.18	—	32.5	32.5	< 0.005	0.01	< 0.005	34.2
Average Daily	—	—	—	—	—	—	—	—	—	—	—	—	—	—	—	—	—	—
Off-Road Equipment	0.06	0.05	0.48	0.72	< 0.005	0.02	—	0.02	0.02	—	0.02	—	108	108	< 0.005	< 0.005	—	108
Architectural Coatings	—	0.21	—	—	—	—	—	—	—	—	—	—	—	—	—	—	—	—
Paving	—	0.04	—	—	—	—	—	—	—	—	—	—	—	—	—	—	—	—

Onsite truck	< 0.005	< 0.005	< 0.005	< 0.005	< 0.005	< 0.005	0.57	0.57	< 0.005	0.06	0.06	—	1.72	1.72	< 0.005	< 0.005	< 0.005	1.81
Annual	—	—	—	—	—	—	—	—	—	—	—	—	—	—	—	—	—	—
Off-Road Equipment	0.01	0.01	0.09	0.13	< 0.005	< 0.005	—	< 0.005	< 0.005	—	< 0.005	—	17.8	17.8	< 0.005	< 0.005	—	17.9
Architectural Coatings	—	0.04	—	—	—	—	—	—	—	—	—	—	—	—	—	—	—	—
Paving	—	0.01	—	—	—	—	—	—	—	—	—	—	—	—	—	—	—	—
Onsite truck	< 0.005	< 0.005	< 0.005	< 0.005	< 0.005	< 0.005	0.10	0.10	< 0.005	0.01	0.01	—	0.28	0.28	< 0.005	< 0.005	< 0.005	0.30
Offsite	—	—	—	—	—	—	—	—	—	—	—	—	—	—	—	—	—	—
Daily, Summer (Max)	—	—	—	—	—	—	—	—	—	—	—	—	—	—	—	—	—	—
Daily, Winter (Max)	—	—	—	—	—	—	—	—	—	—	—	—	—	—	—	—	—	—
Worker	0.14	0.13	0.12	1.43	0.00	0.00	0.41	0.41	0.00	0.10	0.10	—	376	376	0.01	0.02	0.03	381
Vendor	0.02	0.01	0.32	0.15	< 0.005	< 0.005	0.07	0.07	< 0.005	0.02	0.02	—	254	254	0.01	0.04	0.01	265
Hauling	0.13	0.03	1.69	0.81	0.01	0.02	0.37	0.39	0.02	0.10	0.12	—	1,337	1,337	0.10	0.22	0.06	1,404
Average Daily	—	—	—	—	—	—	—	—	—	—	—	—	—	—	—	—	—	—
Worker	0.01	0.01	0.01	0.07	0.00	0.00	0.02	0.02	0.00	0.01	0.01	—	20.1	20.1	< 0.005	< 0.005	0.03	20.4
Vendor	< 0.005	< 0.005	0.02	0.01	< 0.005	< 0.005	< 0.005	< 0.005	< 0.005	< 0.005	< 0.005	—	13.4	13.4	< 0.005	< 0.005	0.01	14.0
Hauling	0.01	< 0.005	0.09	0.04	< 0.005	< 0.005	0.02	0.02	< 0.005	0.01	0.01	—	70.6	70.6	0.01	0.01	0.06	74.2
Annual	—	—	—	—	—	—	—	—	—	—	—	—	—	—	—	—	—	—
Worker	< 0.005	< 0.005	< 0.005	0.01	0.00	0.00	< 0.005	< 0.005	0.00	< 0.005	< 0.005	—	3.32	3.32	< 0.005	< 0.005	< 0.005	3.37
Vendor	< 0.005	< 0.005	< 0.005	< 0.005	< 0.005	< 0.005	< 0.005	< 0.005	< 0.005	< 0.005	< 0.005	—	2.22	2.22	< 0.005	< 0.005	< 0.005	2.32
Hauling	< 0.005	< 0.005	0.02	0.01	< 0.005	< 0.005	< 0.005	< 0.005	< 0.005	< 0.005	< 0.005	—	11.7	11.7	< 0.005	< 0.005	0.01	12.3

3.13. Underground Trenching (2027) - Unmitigated

Criteria Pollutants (lb/day for daily, ton/yr for annual) and GHGs (lb/day for daily, MT/yr for annual)

Location	TOG	ROG	NOx	CO	SO2	PM10E	PM10D	PM10T	PM2.5E	PM2.5D	PM2.5T	BCO2	NBCO2	CO2T	CH4	N2O	R	CO2e
Onsite	—	—	—	—	—	—	—	—	—	—	—	—	—	—	—	—	—	—
Daily, Summer (Max)	—	—	—	—	—	—	—	—	—	—	—	—	—	—	—	—	—	—
Off-Road Equipment	0.73	0.61	6.74	10.5	0.02	0.17	—	0.17	0.16	—	0.16	—	1,676	1,676	0.07	0.01	—	1,682
Onsite truck	0.01	< 0.005	0.08	0.05	< 0.005	< 0.005	11.8	11.8	< 0.005	1.18	1.18	—	33.2	33.2	< 0.005	0.01	0.05	35.0
Daily, Winter (Max)	—	—	—	—	—	—	—	—	—	—	—	—	—	—	—	—	—	—
Average Daily	—	—	—	—	—	—	—	—	—	—	—	—	—	—	—	—	—	—
Off-Road Equipment	0.12	0.10	1.11	1.73	< 0.005	0.03	—	0.03	0.03	—	0.03	—	276	276	0.01	< 0.005	—	277
Onsite truck	< 0.005	< 0.005	0.01	0.01	< 0.005	< 0.005	1.76	1.76	< 0.005	0.18	0.18	—	5.47	5.47	< 0.005	< 0.005	< 0.005	5.75
Annual	—	—	—	—	—	—	—	—	—	—	—	—	—	—	—	—	—	—
Off-Road Equipment	0.02	0.02	0.20	0.32	< 0.005	0.01	—	0.01	< 0.005	—	< 0.005	—	45.6	45.6	< 0.005	< 0.005	—	45.8
Onsite truck	< 0.005	< 0.005	< 0.005	< 0.005	< 0.005	< 0.005	0.32	0.32	< 0.005	0.03	0.03	—	0.91	0.91	< 0.005	< 0.005	< 0.005	0.95
Offsite	—	—	—	—	—	—	—	—	—	—	—	—	—	—	—	—	—	—
Daily, Summer (Max)	—	—	—	—	—	—	—	—	—	—	—	—	—	—	—	—	—	—
Worker	0.15	0.14	0.10	1.78	0.00	0.00	0.41	0.41	0.00	0.10	0.10	—	413	413	0.01	0.02	1.39	419
Vendor	0.02	0.01	0.31	0.16	< 0.005	< 0.005	0.07	0.07	< 0.005	0.02	0.02	—	260	260	0.01	0.04	0.57	272
Hauling	0.13	0.03	1.66	0.83	0.01	0.02	0.37	0.39	0.02	0.10	0.12	—	1,372	1,372	0.11	0.22	2.69	1,442

Daily, Winter (Max)	—	—	—	—	—	—	—	—	—	—	—	—	—	—	—	—	—	—
Average Daily	—	—	—	—	—	—	—	—	—	—	—	—	—	—	—	—	—	—
Worker	0.02	0.02	0.02	0.25	0.00	0.00	0.07	0.07	0.00	0.02	0.02	—	63.5	63.5	< 0.005	< 0.005	0.10	64.5
Vendor	< 0.005	< 0.005	0.05	0.03	< 0.005	< 0.005	0.01	0.01	< 0.005	< 0.005	< 0.005	—	42.7	42.7	< 0.005	0.01	0.04	44.7
Hauling	0.02	< 0.005	0.28	0.14	< 0.005	< 0.005	0.06	0.06	< 0.005	0.02	0.02	—	226	226	0.02	0.04	0.19	237
Annual	—	—	—	—	—	—	—	—	—	—	—	—	—	—	—	—	—	—
Worker	< 0.005	< 0.005	< 0.005	0.05	0.00	0.00	0.01	0.01	0.00	< 0.005	< 0.005	—	10.5	10.5	< 0.005	< 0.005	0.02	10.7
Vendor	< 0.005	< 0.005	0.01	< 0.005	< 0.005	< 0.005	< 0.005	< 0.005	< 0.005	< 0.005	< 0.005	—	7.07	7.07	< 0.005	< 0.005	0.01	7.40
Hauling	< 0.005	< 0.005	0.05	0.03	< 0.005	< 0.005	0.01	0.01	< 0.005	< 0.005	< 0.005	—	37.3	37.3	< 0.005	0.01	0.03	39.2

3.14. Underground Trenching (2027) - Mitigated

Criteria Pollutants (lb/day for daily, ton/yr for annual) and GHGs (lb/day for daily, MT/yr for annual)

Location	TOG	ROG	NOx	CO	SO2	PM10E	PM10D	PM10T	PM2.5E	PM2.5D	PM2.5T	BCO2	NBCO2	CO2T	CH4	N2O	R	CO2e
Onsite	—	—	—	—	—	—	—	—	—	—	—	—	—	—	—	—	—	—
Daily, Summer (Max)	—	—	—	—	—	—	—	—	—	—	—	—	—	—	—	—	—	—
Off-Road Equipment	0.73	0.61	6.74	10.5	0.02	0.17	—	0.17	0.16	—	0.16	—	1,676	1,676	0.07	0.01	—	1,682
Onsite truck	0.01	< 0.005	0.08	0.05	< 0.005	< 0.005	11.8	11.8	< 0.005	1.18	1.18	—	33.2	33.2	< 0.005	0.01	0.05	35.0
Daily, Winter (Max)	—	—	—	—	—	—	—	—	—	—	—	—	—	—	—	—	—	—
Average Daily	—	—	—	—	—	—	—	—	—	—	—	—	—	—	—	—	—	—
Off-Road Equipment	0.12	0.10	1.11	1.73	< 0.005	0.03	—	0.03	0.03	—	0.03	—	276	276	0.01	< 0.005	—	277

Onsite truck	< 0.005	< 0.005	0.01	0.01	< 0.005	< 0.005	1.76	1.76	< 0.005	0.18	0.18	—	5.47	5.47	< 0.005	< 0.005	< 0.005	5.75
Annual	—	—	—	—	—	—	—	—	—	—	—	—	—	—	—	—	—	—
Off-Road Equipment	0.02	0.02	0.20	0.32	< 0.005	0.01	—	0.01	< 0.005	—	< 0.005	—	45.6	45.6	< 0.005	< 0.005	—	45.8
Onsite truck	< 0.005	< 0.005	< 0.005	< 0.005	< 0.005	< 0.005	0.32	0.32	< 0.005	0.03	0.03	—	0.91	0.91	< 0.005	< 0.005	< 0.005	0.95
Offsite	—	—	—	—	—	—	—	—	—	—	—	—	—	—	—	—	—	—
Daily, Summer (Max)	—	—	—	—	—	—	—	—	—	—	—	—	—	—	—	—	—	—
Worker	0.15	0.14	0.10	1.78	0.00	0.00	0.41	0.41	0.00	0.10	0.10	—	413	413	0.01	0.02	1.39	419
Vendor	0.02	0.01	0.31	0.16	< 0.005	< 0.005	0.07	0.07	< 0.005	0.02	0.02	—	260	260	0.01	0.04	0.57	272
Hauling	0.13	0.03	1.66	0.83	0.01	0.02	0.37	0.39	0.02	0.10	0.12	—	1,372	1,372	0.11	0.22	2.69	1,442
Daily, Winter (Max)	—	—	—	—	—	—	—	—	—	—	—	—	—	—	—	—	—	—
Average Daily	—	—	—	—	—	—	—	—	—	—	—	—	—	—	—	—	—	—
Worker	0.02	0.02	0.02	0.25	0.00	0.00	0.07	0.07	0.00	0.02	0.02	—	63.5	63.5	< 0.005	< 0.005	0.10	64.5
Vendor	< 0.005	< 0.005	0.05	0.03	< 0.005	< 0.005	0.01	0.01	< 0.005	< 0.005	< 0.005	—	42.7	42.7	< 0.005	0.01	0.04	44.7
Hauling	0.02	< 0.005	0.28	0.14	< 0.005	< 0.005	0.06	0.06	< 0.005	0.02	0.02	—	226	226	0.02	0.04	0.19	237
Annual	—	—	—	—	—	—	—	—	—	—	—	—	—	—	—	—	—	—
Worker	< 0.005	< 0.005	< 0.005	0.05	0.00	0.00	0.01	0.01	0.00	< 0.005	< 0.005	—	10.5	10.5	< 0.005	< 0.005	0.02	10.7
Vendor	< 0.005	< 0.005	0.01	< 0.005	< 0.005	< 0.005	< 0.005	< 0.005	< 0.005	< 0.005	< 0.005	—	7.07	7.07	< 0.005	< 0.005	0.01	7.40
Hauling	< 0.005	< 0.005	0.05	0.03	< 0.005	< 0.005	0.01	0.01	< 0.005	< 0.005	< 0.005	—	37.3	37.3	< 0.005	0.01	0.03	39.2

4. Operations Emissions Details

4.1. Mobile Emissions by Land Use

4.1.1. Unmitigated

Criteria Pollutants (lb/day for daily, ton/yr for annual) and GHGs (lb/day for daily, MT/yr for annual)

Land Use	TOG	ROG	NOx	CO	SO2	PM10E	PM10D	PM10T	PM2.5E	PM2.5D	PM2.5T	BCO2	NBCO2	CO2T	CH4	N2O	R	CO2e
Daily, Summer (Max)	—	—	—	—	—	—	—	—	—	—	—	—	—	—	—	—	—	—
General Heavy Industry	0.00	0.00	0.00	0.00	0.00	0.00	0.00	0.00	0.00	0.00	0.00	—	0.00	0.00	0.00	0.00	0.00	0.00
Total	0.00	0.00	0.00	0.00	0.00	0.00	0.00	0.00	0.00	0.00	0.00	—	0.00	0.00	0.00	0.00	0.00	0.00
Daily, Winter (Max)	—	—	—	—	—	—	—	—	—	—	—	—	—	—	—	—	—	—
General Heavy Industry	0.00	0.00	0.00	0.00	0.00	0.00	0.00	0.00	0.00	0.00	0.00	—	0.00	0.00	0.00	0.00	0.00	0.00
Total	0.00	0.00	0.00	0.00	0.00	0.00	0.00	0.00	0.00	0.00	0.00	—	0.00	0.00	0.00	0.00	0.00	0.00
Annual	—	—	—	—	—	—	—	—	—	—	—	—	—	—	—	—	—	—
General Heavy Industry	0.00	0.00	0.00	0.00	0.00	0.00	0.00	0.00	0.00	0.00	0.00	—	0.00	0.00	0.00	0.00	0.00	0.00
Total	0.00	0.00	0.00	0.00	0.00	0.00	0.00	0.00	0.00	0.00	0.00	—	0.00	0.00	0.00	0.00	0.00	0.00

4.1.2. Mitigated

Criteria Pollutants (lb/day for daily, ton/yr for annual) and GHGs (lb/day for daily, MT/yr for annual)

Land Use	TOG	ROG	NOx	CO	SO2	PM10E	PM10D	PM10T	PM2.5E	PM2.5D	PM2.5T	BCO2	NBCO2	CO2T	CH4	N2O	R	CO2e
Daily, Summer (Max)	—	—	—	—	—	—	—	—	—	—	—	—	—	—	—	—	—	—

General Heavy Industry	0.00	0.00	0.00	0.00	0.00	0.00	0.00	0.00	0.00	0.00	0.00	—	0.00	0.00	0.00	0.00	0.00	0.00
Total	0.00	0.00	0.00	0.00	0.00	0.00	0.00	0.00	0.00	0.00	0.00	—	0.00	0.00	0.00	0.00	0.00	0.00
Daily, Winter (Max)	—	—	—	—	—	—	—	—	—	—	—	—	—	—	—	—	—	—
General Heavy Industry	0.00	0.00	0.00	0.00	0.00	0.00	0.00	0.00	0.00	0.00	0.00	—	0.00	0.00	0.00	0.00	0.00	0.00
Total	0.00	0.00	0.00	0.00	0.00	0.00	0.00	0.00	0.00	0.00	0.00	—	0.00	0.00	0.00	0.00	0.00	0.00
Annual	—	—	—	—	—	—	—	—	—	—	—	—	—	—	—	—	—	—
General Heavy Industry	0.00	0.00	0.00	0.00	0.00	0.00	0.00	0.00	0.00	0.00	0.00	—	0.00	0.00	0.00	0.00	0.00	0.00
Total	0.00	0.00	0.00	0.00	0.00	0.00	0.00	0.00	0.00	0.00	0.00	—	0.00	0.00	0.00	0.00	0.00	0.00

4.2. Energy

4.2.1. Electricity Emissions By Land Use - Unmitigated

Criteria Pollutants (lb/day for daily, ton/yr for annual) and GHGs (lb/day for daily, MT/yr for annual)

Land Use	TOG	ROG	NOx	CO	SO2	PM10E	PM10D	PM10T	PM2.5E	PM2.5D	PM2.5T	BCO2	NBCO2	CO2T	CH4	N2O	R	CO2e
Daily, Summer (Max)	—	—	—	—	—	—	—	—	—	—	—	—	—	—	—	—	—	—
General Heavy Industry	—	—	—	—	—	—	—	—	—	—	—	—	0.00	0.00	0.00	0.00	—	0.00
Total	—	—	—	—	—	—	—	—	—	—	—	—	0.00	0.00	0.00	0.00	—	0.00
Daily, Winter (Max)	—	—	—	—	—	—	—	—	—	—	—	—	—	—	—	—	—	—

General Heavy Industry	—	—	—	—	—	—	—	—	—	—	—	—	0.00	0.00	0.00	0.00	—	0.00
Total	—	—	—	—	—	—	—	—	—	—	—	—	0.00	0.00	0.00	0.00	—	0.00
Annual	—	—	—	—	—	—	—	—	—	—	—	—	—	—	—	—	—	—
General Heavy Industry	—	—	—	—	—	—	—	—	—	—	—	—	0.00	0.00	0.00	0.00	—	0.00
Total	—	—	—	—	—	—	—	—	—	—	—	—	0.00	0.00	0.00	0.00	—	0.00

4.2.2. Electricity Emissions By Land Use - Mitigated

Criteria Pollutants (lb/day for daily, ton/yr for annual) and GHGs (lb/day for daily, MT/yr for annual)

Land Use	TOG	ROG	NOx	CO	SO2	PM10E	PM10D	PM10T	PM2.5E	PM2.5D	PM2.5T	BCO2	NBCO2	CO2T	CH4	N2O	R	CO2e
Daily, Summer (Max)	—	—	—	—	—	—	—	—	—	—	—	—	—	—	—	—	—	—
General Heavy Industry	—	—	—	—	—	—	—	—	—	—	—	—	0.00	0.00	0.00	0.00	—	0.00
Total	—	—	—	—	—	—	—	—	—	—	—	—	0.00	0.00	0.00	0.00	—	0.00
Daily, Winter (Max)	—	—	—	—	—	—	—	—	—	—	—	—	—	—	—	—	—	—
General Heavy Industry	—	—	—	—	—	—	—	—	—	—	—	—	0.00	0.00	0.00	0.00	—	0.00
Total	—	—	—	—	—	—	—	—	—	—	—	—	0.00	0.00	0.00	0.00	—	0.00
Annual	—	—	—	—	—	—	—	—	—	—	—	—	—	—	—	—	—	—
General Heavy Industry	—	—	—	—	—	—	—	—	—	—	—	—	0.00	0.00	0.00	0.00	—	0.00
Total	—	—	—	—	—	—	—	—	—	—	—	—	0.00	0.00	0.00	0.00	—	0.00

4.2.3. Natural Gas Emissions By Land Use - Unmitigated

Criteria Pollutants (lb/day for daily, ton/yr for annual) and GHGs (lb/day for daily, MT/yr for annual)

Land Use	TOG	ROG	NOx	CO	SO2	PM10E	PM10D	PM10T	PM2.5E	PM2.5D	PM2.5T	BCO2	NBCO2	CO2T	CH4	N2O	R	CO2e
Daily, Summer (Max)	—	—	—	—	—	—	—	—	—	—	—	—	—	—	—	—	—	—
General Heavy Industry	0.00	0.00	0.00	0.00	0.00	0.00	—	0.00	0.00	—	0.00	—	0.00	0.00	0.00	0.00	—	0.00
Total	0.00	0.00	0.00	0.00	0.00	0.00	—	0.00	0.00	—	0.00	—	0.00	0.00	0.00	0.00	—	0.00
Daily, Winter (Max)	—	—	—	—	—	—	—	—	—	—	—	—	—	—	—	—	—	—
General Heavy Industry	0.00	0.00	0.00	0.00	0.00	0.00	—	0.00	0.00	—	0.00	—	0.00	0.00	0.00	0.00	—	0.00
Total	0.00	0.00	0.00	0.00	0.00	0.00	—	0.00	0.00	—	0.00	—	0.00	0.00	0.00	0.00	—	0.00
Annual	—	—	—	—	—	—	—	—	—	—	—	—	—	—	—	—	—	—
General Heavy Industry	0.00	0.00	0.00	0.00	0.00	0.00	—	0.00	0.00	—	0.00	—	0.00	0.00	0.00	0.00	—	0.00
Total	0.00	0.00	0.00	0.00	0.00	0.00	—	0.00	0.00	—	0.00	—	0.00	0.00	0.00	0.00	—	0.00

4.2.4. Natural Gas Emissions By Land Use - Mitigated

Criteria Pollutants (lb/day for daily, ton/yr for annual) and GHGs (lb/day for daily, MT/yr for annual)

Land Use	TOG	ROG	NOx	CO	SO2	PM10E	PM10D	PM10T	PM2.5E	PM2.5D	PM2.5T	BCO2	NBCO2	CO2T	CH4	N2O	R	CO2e
Daily, Summer (Max)	—	—	—	—	—	—	—	—	—	—	—	—	—	—	—	—	—	—

General Heavy Industry	0.00	0.00	0.00	0.00	0.00	0.00	—	0.00	0.00	—	0.00	—	0.00	0.00	0.00	0.00	—	0.00
Total	0.00	0.00	0.00	0.00	0.00	0.00	—	0.00	0.00	—	0.00	—	0.00	0.00	0.00	0.00	—	0.00
Daily, Winter (Max)	—	—	—	—	—	—	—	—	—	—	—	—	—	—	—	—	—	—
General Heavy Industry	0.00	0.00	0.00	0.00	0.00	0.00	—	0.00	0.00	—	0.00	—	0.00	0.00	0.00	0.00	—	0.00
Total	0.00	0.00	0.00	0.00	0.00	0.00	—	0.00	0.00	—	0.00	—	0.00	0.00	0.00	0.00	—	0.00
Annual	—	—	—	—	—	—	—	—	—	—	—	—	—	—	—	—	—	—
General Heavy Industry	0.00	0.00	0.00	0.00	0.00	0.00	—	0.00	0.00	—	0.00	—	0.00	0.00	0.00	0.00	—	0.00
Total	0.00	0.00	0.00	0.00	0.00	0.00	—	0.00	0.00	—	0.00	—	0.00	0.00	0.00	0.00	—	0.00

4.3. Area Emissions by Source

4.3.1. Unmitigated

Criteria Pollutants (lb/day for daily, ton/yr for annual) and GHGs (lb/day for daily, MT/yr for annual)

Source	TOG	ROG	NOx	CO	SO2	PM10E	PM10D	PM10T	PM2.5E	PM2.5D	PM2.5T	BCO2	NBCO2	CO2T	CH4	N2O	R	CO2e
Daily, Summer (Max)	—	—	—	—	—	—	—	—	—	—	—	—	—	—	—	—	—	—
Consumer Products	—	0.00	—	—	—	—	—	—	—	—	—	—	—	—	—	—	—	—
Architectural Coatings	—	0.00	—	—	—	—	—	—	—	—	—	—	—	—	—	—	—	—
Total	—	0.00	—	—	—	—	—	—	—	—	—	—	—	—	—	—	—	—

Daily, Winter (Max)	—	—	—	—	—	—	—	—	—	—	—	—	—	—	—	—	—	—
Consumer Products	—	0.00	—	—	—	—	—	—	—	—	—	—	—	—	—	—	—	—
Architectural Coatings	—	0.00	—	—	—	—	—	—	—	—	—	—	—	—	—	—	—	—
Total	—	0.00	—	—	—	—	—	—	—	—	—	—	—	—	—	—	—	—
Annual	—	—	—	—	—	—	—	—	—	—	—	—	—	—	—	—	—	—
Consumer Products	—	0.00	—	—	—	—	—	—	—	—	—	—	—	—	—	—	—	—
Architectural Coatings	—	0.00	—	—	—	—	—	—	—	—	—	—	—	—	—	—	—	—
Total	—	0.00	—	—	—	—	—	—	—	—	—	—	—	—	—	—	—	—

4.3.2. Mitigated

Criteria Pollutants (lb/day for daily, ton/yr for annual) and GHGs (lb/day for daily, MT/yr for annual)

Source	TOG	ROG	NOx	CO	SO2	PM10E	PM10D	PM10T	PM2.5E	PM2.5D	PM2.5T	BCO2	NBCO2	CO2T	CH4	N2O	R	CO2e
Daily, Summer (Max)	—	—	—	—	—	—	—	—	—	—	—	—	—	—	—	—	—	—
Consumer Products	—	0.00	—	—	—	—	—	—	—	—	—	—	—	—	—	—	—	—
Architectural Coatings	—	0.00	—	—	—	—	—	—	—	—	—	—	—	—	—	—	—	—
Total	—	0.00	—	—	—	—	—	—	—	—	—	—	—	—	—	—	—	—

Daily, Winter (Max)	—	—	—	—	—	—	—	—	—	—	—	—	—	—	—	—	—	—
Consumer Products	—	0.00	—	—	—	—	—	—	—	—	—	—	—	—	—	—	—	—
Architectural Coatings	—	0.00	—	—	—	—	—	—	—	—	—	—	—	—	—	—	—	—
Total	—	0.00	—	—	—	—	—	—	—	—	—	—	—	—	—	—	—	—
Annual	—	—	—	—	—	—	—	—	—	—	—	—	—	—	—	—	—	—
Consumer Products	—	0.00	—	—	—	—	—	—	—	—	—	—	—	—	—	—	—	—
Architectural Coatings	—	0.00	—	—	—	—	—	—	—	—	—	—	—	—	—	—	—	—
Total	—	0.00	—	—	—	—	—	—	—	—	—	—	—	—	—	—	—	—

4.4. Water Emissions by Land Use

4.4.1. Unmitigated

Criteria Pollutants (lb/day for daily, ton/yr for annual) and GHGs (lb/day for daily, MT/yr for annual)

Land Use	TOG	ROG	NOx	CO	SO2	PM10E	PM10D	PM10T	PM2.5E	PM2.5D	PM2.5T	BCO2	NBCO2	CO2T	CH4	N2O	R	CO2e
Daily, Summer (Max)	—	—	—	—	—	—	—	—	—	—	—	—	—	—	—	—	—	—
General Heavy Industry	—	—	—	—	—	—	—	—	—	—	—	0.00	0.00	0.00	0.00	0.00	—	0.00
Total	—	—	—	—	—	—	—	—	—	—	—	0.00	0.00	0.00	0.00	0.00	—	0.00

Daily, Winter (Max)	—	—	—	—	—	—	—	—	—	—	—	—	—	—	—	—	—	—
General Heavy Industry	—	—	—	—	—	—	—	—	—	—	—	0.00	0.00	0.00	0.00	0.00	—	0.00
Total	—	—	—	—	—	—	—	—	—	—	—	0.00	0.00	0.00	0.00	0.00	—	0.00
Annual	—	—	—	—	—	—	—	—	—	—	—	—	—	—	—	—	—	—
General Heavy Industry	—	—	—	—	—	—	—	—	—	—	—	0.00	0.00	0.00	0.00	0.00	—	0.00
Total	—	—	—	—	—	—	—	—	—	—	—	0.00	0.00	0.00	0.00	0.00	—	0.00

4.4.2. Mitigated

Criteria Pollutants (lb/day for daily, ton/yr for annual) and GHGs (lb/day for daily, MT/yr for annual)

Land Use	TOG	ROG	NOx	CO	SO2	PM10E	PM10D	PM10T	PM2.5E	PM2.5D	PM2.5T	BCO2	NBCO2	CO2T	CH4	N2O	R	CO2e
Daily, Summer (Max)	—	—	—	—	—	—	—	—	—	—	—	—	—	—	—	—	—	—
General Heavy Industry	—	—	—	—	—	—	—	—	—	—	—	0.00	0.00	0.00	0.00	0.00	—	0.00
Total	—	—	—	—	—	—	—	—	—	—	—	0.00	0.00	0.00	0.00	0.00	—	0.00
Daily, Winter (Max)	—	—	—	—	—	—	—	—	—	—	—	—	—	—	—	—	—	—
General Heavy Industry	—	—	—	—	—	—	—	—	—	—	—	0.00	0.00	0.00	0.00	0.00	—	0.00
Total	—	—	—	—	—	—	—	—	—	—	—	0.00	0.00	0.00	0.00	0.00	—	0.00
Annual	—	—	—	—	—	—	—	—	—	—	—	—	—	—	—	—	—	—

General Heavy Industry	—	—	—	—	—	—	—	—	—	—	—	0.00	0.00	0.00	0.00	0.00	—	0.00
Total	—	—	—	—	—	—	—	—	—	—	—	0.00	0.00	0.00	0.00	0.00	—	0.00

4.5. Waste Emissions by Land Use

4.5.1. Unmitigated

Criteria Pollutants (lb/day for daily, ton/yr for annual) and GHGs (lb/day for daily, MT/yr for annual)

Land Use	TOG	ROG	NOx	CO	SO2	PM10E	PM10D	PM10T	PM2.5E	PM2.5D	PM2.5T	BCO2	NBCO2	CO2T	CH4	N2O	R	CO2e
Daily, Summer (Max)	—	—	—	—	—	—	—	—	—	—	—	—	—	—	—	—	—	—
General Heavy Industry	—	—	—	—	—	—	—	—	—	—	—	0.00	0.00	0.00	0.00	0.00	—	0.00
Total	—	—	—	—	—	—	—	—	—	—	—	0.00	0.00	0.00	0.00	0.00	—	0.00
Daily, Winter (Max)	—	—	—	—	—	—	—	—	—	—	—	—	—	—	—	—	—	—
General Heavy Industry	—	—	—	—	—	—	—	—	—	—	—	0.00	0.00	0.00	0.00	0.00	—	0.00
Total	—	—	—	—	—	—	—	—	—	—	—	0.00	0.00	0.00	0.00	0.00	—	0.00
Annual	—	—	—	—	—	—	—	—	—	—	—	—	—	—	—	—	—	—
General Heavy Industry	—	—	—	—	—	—	—	—	—	—	—	0.00	0.00	0.00	0.00	0.00	—	0.00
Total	—	—	—	—	—	—	—	—	—	—	—	0.00	0.00	0.00	0.00	0.00	—	0.00

4.5.2. Mitigated

Criteria Pollutants (lb/day for daily, ton/yr for annual) and GHGs (lb/day for daily, MT/yr for annual)

Land Use	TOG	ROG	NOx	CO	SO2	PM10E	PM10D	PM10T	PM2.5E	PM2.5D	PM2.5T	BCO2	NBCO2	CO2T	CH4	N2O	R	CO2e
Daily, Summer (Max)	—	—	—	—	—	—	—	—	—	—	—	—	—	—	—	—	—	—
General Heavy Industry	—	—	—	—	—	—	—	—	—	—	—	0.00	0.00	0.00	0.00	0.00	—	0.00
Total	—	—	—	—	—	—	—	—	—	—	—	0.00	0.00	0.00	0.00	0.00	—	0.00
Daily, Winter (Max)	—	—	—	—	—	—	—	—	—	—	—	—	—	—	—	—	—	—
General Heavy Industry	—	—	—	—	—	—	—	—	—	—	—	0.00	0.00	0.00	0.00	0.00	—	0.00
Total	—	—	—	—	—	—	—	—	—	—	—	0.00	0.00	0.00	0.00	0.00	—	0.00
Annual	—	—	—	—	—	—	—	—	—	—	—	—	—	—	—	—	—	—
General Heavy Industry	—	—	—	—	—	—	—	—	—	—	—	0.00	0.00	0.00	0.00	0.00	—	0.00
Total	—	—	—	—	—	—	—	—	—	—	—	0.00	0.00	0.00	0.00	0.00	—	0.00

4.6. Refrigerant Emissions by Land Use

4.6.1. Unmitigated

Criteria Pollutants (lb/day for daily, ton/yr for annual) and GHGs (lb/day for daily, MT/yr for annual)

Land Use	TOG	ROG	NOx	CO	SO2	PM10E	PM10D	PM10T	PM2.5E	PM2.5D	PM2.5T	BCO2	NBCO2	CO2T	CH4	N2O	R	CO2e
Daily, Summer (Max)	—	—	—	—	—	—	—	—	—	—	—	—	—	—	—	—	—	—

General Heavy Industry	—	—	—	—	—	—	—	—	—	—	—	—	—	—	—	—	0.00	0.00
Total	—	—	—	—	—	—	—	—	—	—	—	—	—	—	—	—	0.00	0.00
Daily, Winter (Max)	—	—	—	—	—	—	—	—	—	—	—	—	—	—	—	—	—	—
General Heavy Industry	—	—	—	—	—	—	—	—	—	—	—	—	—	—	—	—	0.00	0.00
Total	—	—	—	—	—	—	—	—	—	—	—	—	—	—	—	—	0.00	0.00
Annual	—	—	—	—	—	—	—	—	—	—	—	—	—	—	—	—	—	—
General Heavy Industry	—	—	—	—	—	—	—	—	—	—	—	—	—	—	—	—	0.00	0.00
Total	—	—	—	—	—	—	—	—	—	—	—	—	—	—	—	—	0.00	0.00

4.6.2. Mitigated

Criteria Pollutants (lb/day for daily, ton/yr for annual) and GHGs (lb/day for daily, MT/yr for annual)

Land Use	TOG	ROG	NOx	CO	SO2	PM10E	PM10D	PM10T	PM2.5E	PM2.5D	PM2.5T	BCO2	NBCO2	CO2T	CH4	N2O	R	CO2e
Daily, Summer (Max)	—	—	—	—	—	—	—	—	—	—	—	—	—	—	—	—	—	—
General Heavy Industry	—	—	—	—	—	—	—	—	—	—	—	—	—	—	—	—	0.00	0.00
Total	—	—	—	—	—	—	—	—	—	—	—	—	—	—	—	—	0.00	0.00
Daily, Winter (Max)	—	—	—	—	—	—	—	—	—	—	—	—	—	—	—	—	—	—
General Heavy Industry	—	—	—	—	—	—	—	—	—	—	—	—	—	—	—	—	0.00	0.00

Total	—	—	—	—	—	—	—	—	—	—	—	—	—	—	—	—	0.00	0.00
Annual	—	—	—	—	—	—	—	—	—	—	—	—	—	—	—	—	—	—
General Heavy Industry	—	—	—	—	—	—	—	—	—	—	—	—	—	—	—	—	0.00	0.00
Total	—	—	—	—	—	—	—	—	—	—	—	—	—	—	—	—	0.00	0.00

4.7. Offroad Emissions By Equipment Type

4.7.1. Unmitigated

Criteria Pollutants (lb/day for daily, ton/yr for annual) and GHGs (lb/day for daily, MT/yr for annual)

Equipment Type	TOG	ROG	NOx	CO	SO2	PM10E	PM10D	PM10T	PM2.5E	PM2.5D	PM2.5T	BCO2	NBCO2	CO2T	CH4	N2O	R	CO2e
Daily, Summer (Max)	—	—	—	—	—	—	—	—	—	—	—	—	—	—	—	—	—	—
Total	—	—	—	—	—	—	—	—	—	—	—	—	—	—	—	—	—	—
Daily, Winter (Max)	—	—	—	—	—	—	—	—	—	—	—	—	—	—	—	—	—	—
Total	—	—	—	—	—	—	—	—	—	—	—	—	—	—	—	—	—	—
Annual	—	—	—	—	—	—	—	—	—	—	—	—	—	—	—	—	—	—
Total	—	—	—	—	—	—	—	—	—	—	—	—	—	—	—	—	—	—

4.7.2. Mitigated

Criteria Pollutants (lb/day for daily, ton/yr for annual) and GHGs (lb/day for daily, MT/yr for annual)

Equipment Type	TOG	ROG	NOx	CO	SO2	PM10E	PM10D	PM10T	PM2.5E	PM2.5D	PM2.5T	BCO2	NBCO2	CO2T	CH4	N2O	R	CO2e

Daily, Summer (Max)	—	—	—	—	—	—	—	—	—	—	—	—	—	—	—	—	—	—
Total	—	—	—	—	—	—	—	—	—	—	—	—	—	—	—	—	—	—
Daily, Winter (Max)	—	—	—	—	—	—	—	—	—	—	—	—	—	—	—	—	—	—
Total	—	—	—	—	—	—	—	—	—	—	—	—	—	—	—	—	—	—
Annual	—	—	—	—	—	—	—	—	—	—	—	—	—	—	—	—	—	—
Total	—	—	—	—	—	—	—	—	—	—	—	—	—	—	—	—	—	—

4.8. Stationary Emissions By Equipment Type

4.8.1. Unmitigated

Criteria Pollutants (lb/day for daily, ton/yr for annual) and GHGs (lb/day for daily, MT/yr for annual)

Equipment Type	TOG	ROG	NOx	CO	SO2	PM10E	PM10D	PM10T	PM2.5E	PM2.5D	PM2.5T	BCO2	NBCO2	CO2T	CH4	N2O	R	CO2e
Daily, Summer (Max)	—	—	—	—	—	—	—	—	—	—	—	—	—	—	—	—	—	—
Total	—	—	—	—	—	—	—	—	—	—	—	—	—	—	—	—	—	—
Daily, Winter (Max)	—	—	—	—	—	—	—	—	—	—	—	—	—	—	—	—	—	—
Total	—	—	—	—	—	—	—	—	—	—	—	—	—	—	—	—	—	—
Annual	—	—	—	—	—	—	—	—	—	—	—	—	—	—	—	—	—	—
Total	—	—	—	—	—	—	—	—	—	—	—	—	—	—	—	—	—	—

4.8.2. Mitigated

Criteria Pollutants (lb/day for daily, ton/yr for annual) and GHGs (lb/day for daily, MT/yr for annual)

Equipme Type	TOG	ROG	NOx	CO	SO2	PM10E	PM10D	PM10T	PM2.5E	PM2.5D	PM2.5T	BCO2	NBCO2	CO2T	CH4	N2O	R	CO2e
Daily, Summer (Max)	—	—	—	—	—	—	—	—	—	—	—	—	—	—	—	—	—	—
Total	—	—	—	—	—	—	—	—	—	—	—	—	—	—	—	—	—	—
Daily, Winter (Max)	—	—	—	—	—	—	—	—	—	—	—	—	—	—	—	—	—	—
Total	—	—	—	—	—	—	—	—	—	—	—	—	—	—	—	—	—	—
Annual	—	—	—	—	—	—	—	—	—	—	—	—	—	—	—	—	—	—
Total	—	—	—	—	—	—	—	—	—	—	—	—	—	—	—	—	—	—

4.9. User Defined Emissions By Equipment Type

4.9.1. Unmitigated

Criteria Pollutants (lb/day for daily, ton/yr for annual) and GHGs (lb/day for daily, MT/yr for annual)

Equipment Type	TOG	ROG	NOx	CO	SO2	PM10E	PM10D	PM10T	PM2.5E	PM2.5D	PM2.5T	BCO2	NBCO2	CO2T	CH4	N2O	R	CO2e
Daily, Summer (Max)	—	—	—	—	—	—	—	—	—	—	—	—	—	—	—	—	—	—
Total	—	—	—	—	—	—	—	—	—	—	—	—	—	—	—	—	—	—
Daily, Winter (Max)	—	—	—	—	—	—	—	—	—	—	—	—	—	—	—	—	—	—
Total	—	—	—	—	—	—	—	—	—	—	—	—	—	—	—	—	—	—
Annual	—	—	—	—	—	—	—	—	—	—	—	—	—	—	—	—	—	—
Total	—	—	—	—	—	—	—	—	—	—	—	—	—	—	—	—	—	—

4.9.2. Mitigated

Criteria Pollutants (lb/day for daily, ton/yr for annual) and GHGs (lb/day for daily, MT/yr for annual)

Equipment Type	TOG	ROG	NOx	CO	SO2	PM10E	PM10D	PM10T	PM2.5E	PM2.5D	PM2.5T	BCO2	NBCO2	CO2T	CH4	N2O	R	CO2e
Daily, Summer (Max)	—	—	—	—	—	—	—	—	—	—	—	—	—	—	—	—	—	—
Total	—	—	—	—	—	—	—	—	—	—	—	—	—	—	—	—	—	—
Daily, Winter (Max)	—	—	—	—	—	—	—	—	—	—	—	—	—	—	—	—	—	—
Total	—	—	—	—	—	—	—	—	—	—	—	—	—	—	—	—	—	—
Annual	—	—	—	—	—	—	—	—	—	—	—	—	—	—	—	—	—	—
Total	—	—	—	—	—	—	—	—	—	—	—	—	—	—	—	—	—	—

4.10. Soil Carbon Accumulation By Vegetation Type

4.10.1. Soil Carbon Accumulation By Vegetation Type - Unmitigated

Criteria Pollutants (lb/day for daily, ton/yr for annual) and GHGs (lb/day for daily, MT/yr for annual)

Vegetation	TOG	ROG	NOx	CO	SO2	PM10E	PM10D	PM10T	PM2.5E	PM2.5D	PM2.5T	BCO2	NBCO2	CO2T	CH4	N2O	R	CO2e
Daily, Summer (Max)	—	—	—	—	—	—	—	—	—	—	—	—	—	—	—	—	—	—
Total	—	—	—	—	—	—	—	—	—	—	—	—	—	—	—	—	—	—
Daily, Winter (Max)	—	—	—	—	—	—	—	—	—	—	—	—	—	—	—	—	—	—
Total	—	—	—	—	—	—	—	—	—	—	—	—	—	—	—	—	—	—
Annual	—	—	—	—	—	—	—	—	—	—	—	—	—	—	—	—	—	—

Total	—	—	—	—	—	—	—	—	—	—	—	—	—	—	—	—	—	—

4.10.2. Above and Belowground Carbon Accumulation by Land Use Type - Unmitigated

Criteria Pollutants (lb/day for daily, ton/yr for annual) and GHGs (lb/day for daily, MT/yr for annual)

Land Use	TOG	ROG	NOx	CO	SO2	PM10E	PM10D	PM10T	PM2.5E	PM2.5D	PM2.5T	BCO2	NBCO2	CO2T	CH4	N2O	R	CO2e
Daily, Summer (Max)	—	—	—	—	—	—	—	—	—	—	—	—	—	—	—	—	—	—
Total	—	—	—	—	—	—	—	—	—	—	—	—	—	—	—	—	—	—
Daily, Winter (Max)	—	—	—	—	—	—	—	—	—	—	—	—	—	—	—	—	—	—
Total	—	—	—	—	—	—	—	—	—	—	—	—	—	—	—	—	—	—
Annual	—	—	—	—	—	—	—	—	—	—	—	—	—	—	—	—	—	—
Total	—	—	—	—	—	—	—	—	—	—	—	—	—	—	—	—	—	—

4.10.3. Avoided and Sequestered Emissions by Species - Unmitigated

Criteria Pollutants (lb/day for daily, ton/yr for annual) and GHGs (lb/day for daily, MT/yr for annual)

Species	TOG	ROG	NOx	CO	SO2	PM10E	PM10D	PM10T	PM2.5E	PM2.5D	PM2.5T	BCO2	NBCO2	CO2T	CH4	N2O	R	CO2e
Daily, Summer (Max)	—	—	—	—	—	—	—	—	—	—	—	—	—	—	—	—	—	—
Avoided	—	—	—	—	—	—	—	—	—	—	—	—	—	—	—	—	—	—
Subtotal	—	—	—	—	—	—	—	—	—	—	—	—	—	—	—	—	—	—
Sequestered	—	—	—	—	—	—	—	—	—	—	—	—	—	—	—	—	—	—
Subtotal	—	—	—	—	—	—	—	—	—	—	—	—	—	—	—	—	—	—
Removed	—	—	—	—	—	—	—	—	—	—	—	—	—	—	—	—	—	—

Subtotal	—	—	—	—	—	—	—	—	—	—	—	—	—	—	—	—	—	—
—	—	—	—	—	—	—	—	—	—	—	—	—	—	—	—	—	—	—
Daily, Winter (Max)	—	—	—	—	—	—	—	—	—	—	—	—	—	—	—	—	—	—
Avoided	—	—	—	—	—	—	—	—	—	—	—	—	—	—	—	—	—	—
Subtotal	—	—	—	—	—	—	—	—	—	—	—	—	—	—	—	—	—	—
Sequestered	—	—	—	—	—	—	—	—	—	—	—	—	—	—	—	—	—	—
Subtotal	—	—	—	—	—	—	—	—	—	—	—	—	—	—	—	—	—	—
Removed	—	—	—	—	—	—	—	—	—	—	—	—	—	—	—	—	—	—
Subtotal	—	—	—	—	—	—	—	—	—	—	—	—	—	—	—	—	—	—
—	—	—	—	—	—	—	—	—	—	—	—	—	—	—	—	—	—	—
Annual	—	—	—	—	—	—	—	—	—	—	—	—	—	—	—	—	—	—
Avoided	—	—	—	—	—	—	—	—	—	—	—	—	—	—	—	—	—	—
Subtotal	—	—	—	—	—	—	—	—	—	—	—	—	—	—	—	—	—	—
Sequestered	—	—	—	—	—	—	—	—	—	—	—	—	—	—	—	—	—	—
Subtotal	—	—	—	—	—	—	—	—	—	—	—	—	—	—	—	—	—	—
Removed	—	—	—	—	—	—	—	—	—	—	—	—	—	—	—	—	—	—
Subtotal	—	—	—	—	—	—	—	—	—	—	—	—	—	—	—	—	—	—
—	—	—	—	—	—	—	—	—	—	—	—	—	—	—	—	—	—	—

4.10.4. Soil Carbon Accumulation By Vegetation Type - Mitigated

Criteria Pollutants (lb/day for daily, ton/yr for annual) and GHGs (lb/day for daily, MT/yr for annual)

Vegetation	TOG	ROG	NOx	CO	SO2	PM10E	PM10D	PM10T	PM2.5E	PM2.5D	PM2.5T	BCO2	NBCO2	CO2T	CH4	N2O	R	CO2e

Daily, Summer (Max)	—	—	—	—	—	—	—	—	—	—	—	—	—	—	—	—	—	—
Total	—	—	—	—	—	—	—	—	—	—	—	—	—	—	—	—	—	—
Daily, Winter (Max)	—	—	—	—	—	—	—	—	—	—	—	—	—	—	—	—	—	—
Total	—	—	—	—	—	—	—	—	—	—	—	—	—	—	—	—	—	—
Annual	—	—	—	—	—	—	—	—	—	—	—	—	—	—	—	—	—	—
Total	—	—	—	—	—	—	—	—	—	—	—	—	—	—	—	—	—	—

4.10.5. Above and Belowground Carbon Accumulation by Land Use Type - Mitigated

Criteria Pollutants (lb/day for daily, ton/yr for annual) and GHGs (lb/day for daily, MT/yr for annual)

Land Use	TOG	ROG	NOx	CO	SO2	PM10E	PM10D	PM10T	PM2.5E	PM2.5D	PM2.5T	BCO2	NBCO2	CO2T	CH4	N2O	R	CO2e
Daily, Summer (Max)	—	—	—	—	—	—	—	—	—	—	—	—	—	—	—	—	—	—
Total	—	—	—	—	—	—	—	—	—	—	—	—	—	—	—	—	—	—
Daily, Winter (Max)	—	—	—	—	—	—	—	—	—	—	—	—	—	—	—	—	—	—
Total	—	—	—	—	—	—	—	—	—	—	—	—	—	—	—	—	—	—
Annual	—	—	—	—	—	—	—	—	—	—	—	—	—	—	—	—	—	—
Total	—	—	—	—	—	—	—	—	—	—	—	—	—	—	—	—	—	—

4.10.6. Avoided and Sequestered Emissions by Species - Mitigated

Criteria Pollutants (lb/day for daily, ton/yr for annual) and GHGs (lb/day for daily, MT/yr for annual)

Species	TOG	ROG	NOx	CO	SO2	PM10E	PM10D	PM10T	PM2.5E	PM2.5D	PM2.5T	BCO2	NBCO2	CO2T	CH4	N2O	R	CO2e

Daily, Summer (Max)	—	—	—	—	—	—	—	—	—	—	—	—	—	—	—	—	—	—
Avoided	—	—	—	—	—	—	—	—	—	—	—	—	—	—	—	—	—	—
Subtotal	—	—	—	—	—	—	—	—	—	—	—	—	—	—	—	—	—	—
Sequestered	—	—	—	—	—	—	—	—	—	—	—	—	—	—	—	—	—	—
Subtotal	—	—	—	—	—	—	—	—	—	—	—	—	—	—	—	—	—	—
Removed	—	—	—	—	—	—	—	—	—	—	—	—	—	—	—	—	—	—
Subtotal	—	—	—	—	—	—	—	—	—	—	—	—	—	—	—	—	—	—
—	—	—	—	—	—	—	—	—	—	—	—	—	—	—	—	—	—	—
Daily, Winter (Max)	—	—	—	—	—	—	—	—	—	—	—	—	—	—	—	—	—	—
Avoided	—	—	—	—	—	—	—	—	—	—	—	—	—	—	—	—	—	—
Subtotal	—	—	—	—	—	—	—	—	—	—	—	—	—	—	—	—	—	—
Sequestered	—	—	—	—	—	—	—	—	—	—	—	—	—	—	—	—	—	—
Subtotal	—	—	—	—	—	—	—	—	—	—	—	—	—	—	—	—	—	—
Removed	—	—	—	—	—	—	—	—	—	—	—	—	—	—	—	—	—	—
Subtotal	—	—	—	—	—	—	—	—	—	—	—	—	—	—	—	—	—	—
—	—	—	—	—	—	—	—	—	—	—	—	—	—	—	—	—	—	—
Annual	—	—	—	—	—	—	—	—	—	—	—	—	—	—	—	—	—	—
Avoided	—	—	—	—	—	—	—	—	—	—	—	—	—	—	—	—	—	—
Subtotal	—	—	—	—	—	—	—	—	—	—	—	—	—	—	—	—	—	—
Sequestered	—	—	—	—	—	—	—	—	—	—	—	—	—	—	—	—	—	—
Subtotal	—	—	—	—	—	—	—	—	—	—	—	—	—	—	—	—	—	—

Removed	—	—	—	—	—	—	—	—	—	—	—	—	—	—	—	—	—	—	—
Subtotal	—	—	—	—	—	—	—	—	—	—	—	—	—	—	—	—	—	—	—
—	—	—	—	—	—	—	—	—	—	—	—	—	—	—	—	—	—	—	—

5. Activity Data

5.1. Construction Schedule

Phase Name	Phase Type	Start Date	End Date	Days Per Week	Work Days per Phase	Phase Description
Demolition	Demolition	1/1/2027	1/14/2027	5.00	10.0	—
Site Preparation	Site Preparation	1/15/2027	2/11/2027	5.00	20.0	—
Overhead Pole Installation	Building Construction	2/12/2027	6/3/2027	5.00	80.0	—
Underground Vault Instalation	Building Construction	8/27/2027	12/16/2027	5.00	80.0	—
Paving and Cleanup	Paving	12/17/2027	1/27/2028	5.00	30.0	—
Underground Trenching	Trenching	6/4/2027	8/26/2027	5.00	60.0	—

5.2. Off-Road Equipment

5.2.1. Unmitigated

Phase Name	Equipment Type	Fuel Type	Engine Tier	Number per Day	Hours Per Day	Horsepower	Load Factor
Demolition	Concrete/Industrial Saws	Diesel	Average	1.00	8.00	33.0	0.73
Demolition	Rubber Tired Dozers	Diesel	Average	2.00	8.00	367	0.40
Demolition	Tractors/Loaders/Backhoes	Diesel	Average	2.00	8.00	84.0	0.37
Site Preparation	Aerial Lifts	Diesel	Average	1.00	8.00	46.0	0.31
Site Preparation	Bore/Drill Rigs	Diesel	Average	1.00	8.00	83.0	0.50

Site Preparation	Cement and Mortar Mixers	Diesel	Average	2.00	8.00	10.0	0.56
Site Preparation	Cranes	Diesel	Average	1.00	8.00	367	0.29
Site Preparation	Excavators	Diesel	Average	1.00	8.00	36.0	0.38
Site Preparation	Graders	Diesel	Average	1.00	8.00	148	0.41
Site Preparation	Plate Compactors	Diesel	Average	1.00	8.00	8.00	0.43
Site Preparation	Pumps	Diesel	Average	1.00	8.00	11.0	0.74
Site Preparation	Rollers	Diesel	Average	1.00	8.00	36.0	0.38
Site Preparation	Skid Steer Loaders	Diesel	Average	1.00	8.00	71.0	0.37
Site Preparation	Tractors/Loaders/Backhoes	Diesel	Average	1.00	8.00	84.0	0.37
Overhead Pole Installation	Aerial Lifts	Diesel	Average	2.00	8.00	46.0	0.31
Overhead Pole Installation	Bore/Drill Rigs	Diesel	Average	1.00	8.00	83.0	0.50
Overhead Pole Installation	Cement and Mortar Mixers	Diesel	Average	1.00	8.00	10.0	0.56
Overhead Pole Installation	Cranes	Diesel	Average	1.00	8.00	367	0.29
Overhead Pole Installation	Excavators	Diesel	Average	1.00	8.00	36.0	0.38
Overhead Pole Installation	Forklifts	Diesel	Average	1.00	8.00	82.0	0.20
Overhead Pole Installation	Generator Sets	Diesel	Average	1.00	8.00	14.0	0.74
Overhead Pole Installation	Other General Industrial Equipment	Diesel	Average	1.00	8.00	35.0	0.34
Overhead Pole Installation	Rollers	Diesel	Average	1.00	8.00	36.0	0.38
Overhead Pole Installation	Skid Steer Loaders	Diesel	Average	1.00	8.00	71.0	0.37

Overhead Pole Installation	Tractors/Loaders/Backhoes	Diesel	Average	1.00	8.00	84.0	0.37
Overhead Pole Installation	Welders	Diesel	Average	2.00	8.00	46.0	0.45
Underground Vault Instalation	Aerial Lifts	Diesel	Average	2.00	8.00	46.0	0.31
Underground Vault Instalation	Bore/Drill Rigs	Diesel	Average	1.00	8.00	83.0	0.50
Underground Vault Instalation	Cement and Mortar Mixers	Diesel	Average	1.00	8.00	10.0	0.56
Underground Vault Instalation	Cranes	Diesel	Average	1.00	8.00	367	0.29
Underground Vault Instalation	Excavators	Diesel	Average	1.00	8.00	36.0	0.38
Underground Vault Instalation	Forklifts	Diesel	Average	1.00	8.00	82.0	0.20
Underground Vault Instalation	Generator Sets	Diesel	Average	1.00	8.00	14.0	0.74
Underground Vault Instalation	Other General Industrial Equipment	Diesel	Average	1.00	8.00	35.0	0.34
Underground Vault Instalation	Rollers	Diesel	Average	1.00	8.00	36.0	0.38
Underground Vault Instalation	Skid Steer Loaders	Diesel	Average	1.00	8.00	71.0	0.37
Underground Vault Instalation	Tractors/Loaders/Backhoes	Diesel	Average	1.00	8.00	84.0	0.37
Underground Vault Instalation	Welders	Diesel	Average	2.00	8.00	46.0	0.45
Paving and Cleanup	Pavers	Diesel	Average	2.00	8.00	81.0	0.42
Paving and Cleanup	Paving Equipment	Diesel	Average	2.00	8.00	89.0	0.36
Paving and Cleanup	Rollers	Diesel	Average	2.00	8.00	36.0	0.38
Paving and Cleanup	Cement and Mortar Mixers	Diesel	Average	1.00	8.00	10.0	0.56

Paving and Cleanup	Tractors/Loaders/Backh	Diesel	Average	1.00	8.00	84.0	0.37
Paving and Cleanup	Air Compressors	Diesel	Average	1.00	8.00	37.0	0.48
Underground Trenching	Excavators	Diesel	Average	2.00	8.00	36.0	0.38
Underground Trenching	Skid Steer Loaders	Diesel	Average	2.00	8.00	71.0	0.37
Underground Trenching	Tractors/Loaders/Backh oes	Diesel	Average	1.00	8.00	84.0	0.37
Underground Trenching	Aerial Lifts	Diesel	Average	1.00	8.00	46.0	0.31
Underground Trenching	Bore/Drill Rigs	Diesel	Average	1.00	8.00	83.0	0.50
Underground Trenching	Pumps	Diesel	Average	1.00	8.00	11.0	0.74

5.2.2. Mitigated

Phase Name	Equipment Type	Fuel Type	Engine Tier	Number per Day	Hours Per Day	Horsepower	Load Factor
Demolition	Concrete/Industrial Saws	Diesel	Average	1.00	8.00	33.0	0.73
Demolition	Rubber Tired Dozers	Diesel	Average	2.00	8.00	367	0.40
Demolition	Tractors/Loaders/Backh oes	Diesel	Average	2.00	8.00	84.0	0.37
Site Preparation	Aerial Lifts	Diesel	Average	1.00	8.00	46.0	0.31
Site Preparation	Bore/Drill Rigs	Diesel	Average	1.00	8.00	83.0	0.50
Site Preparation	Cement and Mortar Mixers	Diesel	Average	2.00	8.00	10.0	0.56
Site Preparation	Cranes	Diesel	Average	1.00	8.00	367	0.29
Site Preparation	Excavators	Diesel	Average	1.00	8.00	36.0	0.38
Site Preparation	Graders	Diesel	Average	1.00	8.00	148	0.41
Site Preparation	Plate Compactors	Diesel	Average	1.00	8.00	8.00	0.43
Site Preparation	Pumps	Diesel	Average	1.00	8.00	11.0	0.74
Site Preparation	Rollers	Diesel	Average	1.00	8.00	36.0	0.38
Site Preparation	Skid Steer Loaders	Diesel	Average	1.00	8.00	71.0	0.37

Site Preparation	Tractors/Loaders/Backhoes	Diesel	Average	1.00	8.00	84.0	0.37
Overhead Pole Installation	Aerial Lifts	Diesel	Average	2.00	8.00	46.0	0.31
Overhead Pole Installation	Bore/Drill Rigs	Diesel	Average	1.00	8.00	83.0	0.50
Overhead Pole Installation	Cement and Mortar Mixers	Diesel	Average	1.00	8.00	10.0	0.56
Overhead Pole Installation	Cranes	Diesel	Average	1.00	8.00	367	0.29
Overhead Pole Installation	Excavators	Diesel	Average	1.00	8.00	36.0	0.38
Overhead Pole Installation	Forklifts	Diesel	Average	1.00	8.00	82.0	0.20
Overhead Pole Installation	Generator Sets	Diesel	Average	1.00	8.00	14.0	0.74
Overhead Pole Installation	Other General Industrial Equipment	Diesel	Average	1.00	8.00	35.0	0.34
Overhead Pole Installation	Rollers	Diesel	Average	1.00	8.00	36.0	0.38
Overhead Pole Installation	Skid Steer Loaders	Diesel	Average	1.00	8.00	71.0	0.37
Overhead Pole Installation	Tractors/Loaders/Backhoes	Diesel	Average	1.00	8.00	84.0	0.37
Overhead Pole Installation	Welders	Diesel	Average	2.00	8.00	46.0	0.45
Underground Vault Instalation	Aerial Lifts	Diesel	Average	2.00	8.00	46.0	0.31
Underground Vault Instalation	Bore/Drill Rigs	Diesel	Average	1.00	8.00	83.0	0.50
Underground Vault Instalation	Cement and Mortar Mixers	Diesel	Average	1.00	8.00	10.0	0.56
Underground Vault Instalation	Cranes	Diesel	Average	1.00	8.00	367	0.29

Underground Vault Instalation	Excavators	Diesel	Average	1.00	8.00	36.0	0.38
Underground Vault Instalation	Forklifts	Diesel	Average	1.00	8.00	82.0	0.20
Underground Vault Instalation	Generator Sets	Diesel	Average	1.00	8.00	14.0	0.74
Underground Vault Instalation	Other General Industrial Equipment	Diesel	Average	1.00	8.00	35.0	0.34
Underground Vault Instalation	Rollers	Diesel	Average	1.00	8.00	36.0	0.38
Underground Vault Instalation	Skid Steer Loaders	Diesel	Average	1.00	8.00	71.0	0.37
Underground Vault Instalation	Tractors/Loaders/Backhoes	Diesel	Average	1.00	8.00	84.0	0.37
Underground Vault Instalation	Welders	Diesel	Average	2.00	8.00	46.0	0.45
Paving and Cleanup	Pavers	Diesel	Average	2.00	8.00	81.0	0.42
Paving and Cleanup	Paving Equipment	Diesel	Average	2.00	8.00	89.0	0.36
Paving and Cleanup	Rollers	Diesel	Average	2.00	8.00	36.0	0.38
Paving and Cleanup	Cement and Mortar Mixers	Diesel	Average	1.00	8.00	10.0	0.56
Paving and Cleanup	Tractors/Loaders/Backhoes	Diesel	Average	1.00	8.00	84.0	0.37
Paving and Cleanup	Air Compressors	Diesel	Average	1.00	8.00	37.0	0.48
Underground Trenching	Excavators	Diesel	Average	2.00	8.00	36.0	0.38
Underground Trenching	Skid Steer Loaders	Diesel	Average	2.00	8.00	71.0	0.37
Underground Trenching	Tractors/Loaders/Backhoes	Diesel	Average	1.00	8.00	84.0	0.37
Underground Trenching	Aerial Lifts	Diesel	Average	1.00	8.00	46.0	0.31
Underground Trenching	Bore/Drill Rigs	Diesel	Average	1.00	8.00	83.0	0.50
Underground Trenching	Pumps	Diesel	Average	1.00	8.00	11.0	0.74

5.3. Construction Vehicles

5.3.1. Unmitigated

Phase Name	Trip Type	One-Way Trips per Day	Miles per Trip	Vehicle Mix
Demolition	—	—	—	—
Demolition	Worker	30.0	11.7	LDA,LDT1,LDT2
Demolition	Vendor	10.0	8.40	HHDT,MHDT
Demolition	Hauling	30.0	20.0	HHDT
Demolition	Onsite truck	4.00	2.00	HHDT
Site Preparation	—	—	—	—
Site Preparation	Worker	30.0	11.7	LDA,LDT1,LDT2
Site Preparation	Vendor	10.0	8.40	HHDT,MHDT
Site Preparation	Hauling	30.0	20.0	HHDT
Site Preparation	Onsite truck	4.00	2.00	HHDT
Overhead Pole Installation	—	—	—	—
Overhead Pole Installation	Worker	50.0	11.7	LDA,LDT1,LDT2
Overhead Pole Installation	Vendor	10.0	8.40	HHDT,MHDT
Overhead Pole Installation	Hauling	20.0	20.0	HHDT
Overhead Pole Installation	Onsite truck	4.00	2.00	HHDT
Underground Trenching	—	—	—	—
Underground Trenching	Worker	50.0	11.7	LDA,LDT1,LDT2
Underground Trenching	Vendor	10.0	8.40	HHDT,MHDT
Underground Trenching	Hauling	20.0	20.0	HHDT
Underground Trenching	Onsite truck	4.00	2.00	HHDT
Underground Vault Instalation	—	—	—	—
Underground Vault Instalation	Worker	50.0	11.7	LDA,LDT1,LDT2
Underground Vault Instalation	Vendor	10.0	8.40	HHDT,MHDT

Underground Vault Instalation	Hauling	20.0	20.0	HHDT
Underground Vault Instalation	Onsite truck	4.00	2.00	HHDT
Paving and Cleanup	—	—	—	—
Paving and Cleanup	Worker	50.0	11.7	LDA,LDT1,LDT2
Paving and Cleanup	Vendor	10.0	8.40	HHDT,MHDT
Paving and Cleanup	Hauling	20.0	20.0	HHDT
Paving and Cleanup	Onsite truck	4.00	2.00	HHDT

5.3.2. Mitigated

Phase Name	Trip Type	One-Way Trips per Day	Miles per Trip	Vehicle Mix
Demolition	—	—	—	—
Demolition	Worker	30.0	11.7	LDA,LDT1,LDT2
Demolition	Vendor	10.0	8.40	HHDT,MHDT
Demolition	Hauling	30.0	20.0	HHDT
Demolition	Onsite truck	4.00	2.00	HHDT
Site Preparation	—	—	—	—
Site Preparation	Worker	30.0	11.7	LDA,LDT1,LDT2
Site Preparation	Vendor	10.0	8.40	HHDT,MHDT
Site Preparation	Hauling	30.0	20.0	HHDT
Site Preparation	Onsite truck	4.00	2.00	HHDT
Overhead Pole Installation	—	—	—	—
Overhead Pole Installation	Worker	50.0	11.7	LDA,LDT1,LDT2
Overhead Pole Installation	Vendor	10.0	8.40	HHDT,MHDT
Overhead Pole Installation	Hauling	20.0	20.0	HHDT
Overhead Pole Installation	Onsite truck	4.00	2.00	HHDT
Underground Trenching	—	—	—	—
Underground Trenching	Worker	50.0	11.7	LDA,LDT1,LDT2

Underground Trenching	Vendor	10.0	8.40	HHDT,MHDT
Underground Trenching	Hauling	20.0	20.0	HHDT
Underground Trenching	Onsite truck	4.00	2.00	HHDT
Underground Vault Instalation	—	—	—	—
Underground Vault Instalation	Worker	50.0	11.7	LDA,LDT1,LDT2
Underground Vault Instalation	Vendor	10.0	8.40	HHDT,MHDT
Underground Vault Instalation	Hauling	20.0	20.0	HHDT
Underground Vault Instalation	Onsite truck	4.00	2.00	HHDT
Paving and Cleanup	—	—	—	—
Paving and Cleanup	Worker	50.0	11.7	LDA,LDT1,LDT2
Paving and Cleanup	Vendor	10.0	8.40	HHDT,MHDT
Paving and Cleanup	Hauling	20.0	20.0	HHDT
Paving and Cleanup	Onsite truck	4.00	2.00	HHDT

5.4. Vehicles

5.4.1. Construction Vehicle Control Strategies

Non-applicable. No control strategies activated by user.

5.5. Architectural Coatings

Phase Name	Residential Interior Area Coated (sq ft)	Residential Exterior Area Coated (sq ft)	Non-Residential Interior Area Coated (sq ft)	Non-Residential Exterior Area Coated (sq ft)	Parking Area Coated (sq ft)
Paving and Cleanup	0.00	0.00	0.00	0.00	26,136

5.6. Dust Mitigation

5.6.1. Construction Earthmoving Activities

Phase Name	Material Imported (cy)	Material Exported (cy)	Acres Graded (acres)	Material Demolished (sq. ft.)	Acres Paved (acres)

Demolition	0.00	0.00	0.00	—	—
Site Preparation	—	—	10.0	0.00	—
Paving and Cleanup	0.00	0.00	0.00	0.00	10.0

5.6.2. Construction Earthmoving Control Strategies

Non-applicable. No control strategies activated by user.

5.7. Construction Paving

Land Use	Area Paved (acres)	% Asphalt
General Heavy Industry	10.0	80%

5.8. Construction Electricity Consumption and Emissions Factors

kWh per Year and Emission Factor (lb/MWh)

Year	kWh per Year	CO2	CH4	N2O
2027	0.00	387	0.03	< 0.005
2028	0.00	387	0.03	< 0.005

5.9. Operational Mobile Sources

5.9.1. Unmitigated

Land Use Type	Trips/Weekday	Trips/Saturday	Trips/Sunday	Trips/Year	VMT/Weekday	VMT/Saturday	VMT/Sunday	VMT/Year
General Heavy Industry	0.00	0.00	0.00	0.00	0.00	0.00	0.00	0.00

5.9.2. Mitigated

Land Use Type	Trips/Weekday	Trips/Saturday	Trips/Sunday	Trips/Year	VMT/Weekday	VMT/Saturday	VMT/Sunday	VMT/Year
General Heavy Industry	0.00	0.00	0.00	0.00	0.00	0.00	0.00	0.00

5.10. Operational Area Sources

5.10.1. Hearths

5.10.1.1. Unmitigated

5.10.1.2. Mitigated

5.10.2. Architectural Coatings

Residential Interior Area Coated (sq ft)	Residential Exterior Area Coated (sq ft)	Non-Residential Interior Area Coated (sq ft)	Non-Residential Exterior Area Coated (sq ft)	Parking Area Coated (sq ft)
0	0.00	0.00	0.00	—

5.10.3. Landscape Equipment

Equipment Type	Fuel Type	Number Per Day	Hours per Day	Hours per Year	Horsepower	Load Factor

5.10.4. Landscape Equipment - Mitigated

Equipment Type	Fuel Type	Number Per Day	Hours per Day	Hours per Year	Horsepower	Load Factor

5.11. Operational Energy Consumption

5.11.1. Unmitigated

Electricity (kWh/yr) and CO2 and CH4 and N2O and Natural Gas (kBTU/yr)

Land Use	Electricity (kWh/yr)	CO2	CH4	N2O	Natural Gas (kBTU/yr)
General Heavy Industry	0.00	387	0.0330	0.0040	0.00

5.11.2. Mitigated

Electricity (kWh/yr) and CO2 and CH4 and N2O and Natural Gas (kBTU/yr)

Land Use	Electricity (kWh/yr)	CO2	CH4	N2O	Natural Gas (kBTU/yr)
General Heavy Industry	0.00	387	0.0330	0.0040	0.00

5.12. Operational Water and Wastewater Consumption

5.12.1. Unmitigated

Land Use	Indoor Water (gal/year)	Outdoor Water (gal/year)
General Heavy Industry	0.00	0.00

5.12.2. Mitigated

Land Use	Indoor Water (gal/year)	Outdoor Water (gal/year)
General Heavy Industry	0.00	0.00

5.13. Operational Waste Generation

5.13.1. Unmitigated

Land Use	Waste (ton/year)	Cogeneration (kWh/year)
General Heavy Industry	0.00	—

5.13.2. Mitigated

Land Use	Waste (ton/year)	Cogeneration (kWh/year)
General Heavy Industry	0.00	—

5.14. Operational Refrigeration and Air Conditioning Equipment

5.14.1. Unmitigated

Land Use Type	Equipment Type	Refrigerant	GWP	Quantity (kg)	Operations Leak Rate	Service Leak Rate	Times Serviced
General Heavy Industry	Other commercial A/C and heat pumps	R-410A	2,088	0.00	4.00	4.00	18.0

5.14.2. Mitigated

Land Use Type	Equipment Type	Refrigerant	GWP	Quantity (kg)	Operations Leak Rate	Service Leak Rate	Times Serviced
General Heavy Industry	Other commercial A/C and heat pumps	R-410A	2,088	0.00	4.00	4.00	18.0

5.15. Operational Off-Road Equipment

5.15.1. Unmitigated

Equipment Type	Fuel Type	Engine Tier	Number per Day	Hours Per Day	Horsepower	Load Factor

5.15.2. Mitigated

Equipment Type	Fuel Type	Engine Tier	Number per Day	Hours Per Day	Horsepower	Load Factor

5.16. Stationary Sources

5.16.1. Emergency Generators and Fire Pumps

Equipment Type	Fuel Type	Number per Day	Hours per Day	Hours per Year	Horsepower	Load Factor

5.16.2. Process Boilers

Equipment Type	Fuel Type	Number	Boiler Rating (MMBtu/hr)	Daily Heat Input (MMBtu/day)	Annual Heat Input (MMBtu/yr)

5.17. User Defined

Equipment Type	Fuel Type

5.18. Vegetation

5.18.1. Land Use Change

5.18.1.1. Unmitigated

Vegetation Land Use Type	Vegetation Soil Type	Initial Acres	Final Acres

5.18.1.2. Mitigated

Vegetation Land Use Type	Vegetation Soil Type	Initial Acres	Final Acres

5.18.1. Biomass Cover Type

5.18.1.1. Unmitigated

Biomass Cover Type	Initial Acres	Final Acres

5.18.1.2. Mitigated

Biomass Cover Type	Initial Acres	Final Acres

5.18.2. Sequestration

5.18.2.1. Unmitigated

Tree Type	Number	Electricity Saved (kWh/year)	Natural Gas Saved (btu/year)

5.18.2.2. Mitigated

Tree Type	Number	Electricity Saved (kWh/year)	Natural Gas Saved (btu/year)

6. Climate Risk Detailed Report

6.1. Climate Risk Summary

Cal-Adapt midcentury 2040–2059 average projections for four hazards are reported below for your project location. These are under Representation Concentration Pathway (RCP) 8.5 which assumes GHG emissions will continue to rise strongly through 2050 and then plateau around 2100.

Climate Hazard	Result for Project Location	Unit
Temperature and Extreme Heat	12.2	annual days of extreme heat
Extreme Precipitation	2.50	annual days with precipitation above 20 mm
Sea Level Rise	—	meters of inundation depth
Wildfire	10.5	annual hectares burned

Temperature and Extreme Heat data are for grid cell in which your project are located. The projection is based on the 98th historical percentile of daily maximum/minimum temperatures from observed historical data (32 climate model ensemble from Cal-Adapt, 2040–2059 average under RCP 8.5). Each grid cell is 6 kilometers (km) by 6 km, or 3.7 miles (mi) by 3.7 mi.
Extreme Precipitation data are for the grid cell in which your project are located. The threshold of 20 mm is equivalent to about ¾ an inch of rain, which would be light to moderate rainfall if received over a full day or heavy rain if received over a period of 2 to 4 hours. Each grid cell is 6 kilometers (km) by 6 km, or 3.7 miles (mi) by 3.7 mi.
Sea Level Rise data are for the grid cell in which your project are located. The projections are from Radke et al. (2017), as reported in Cal-Adapt (Radke et al., 2017, CEC-500-2017-008), and consider inundation location and depth for the San Francisco Bay, the Sacramento-San Joaquin River Delta and California coast resulting different increments of sea level rise coupled with extreme storm events. Users may select from four scenarios to view the range in potential inundation depth for the grid cell. The four scenarios are: No rise, 0.5 meter, 1.0 meter, 1.41 meters
Wildfire data are for the grid cell in which your project are located. The projections are from UC Davis, as reported in Cal-Adapt (2040–2059 average under RCP 8.5), and consider historical data of climate, vegetation, population density, and large (> 400 ha) fire history. Users may select from four model simulations to view the range in potential wildfire probabilities for the grid cell. The four simulations make different assumptions about expected rainfall and temperature are: Warmer/drier (HadGEM2-ES), Cooler/wetter (CNRM-CM5), Average conditions (CanESM2), Range of different rainfall and temperature possibilities (MIROC5). Each grid cell is 6 kilometers (km) by 6 km, or 3.7 miles (mi) by 3.7 mi.

6.2. Initial Climate Risk Scores

Climate Hazard	Exposure Score	Sensitivity Score	Adaptive Capacity Score	Vulnerability Score
Temperature and Extreme Heat	N/A	N/A	N/A	N/A
Extreme Precipitation	1	0	0	N/A
Sea Level Rise	1	0	0	N/A
Wildfire	1	0	0	N/A
Flooding	N/A	N/A	N/A	N/A

Drought	N/A	N/A	N/A	N/A
Snowpack Reduction	N/A	N/A	N/A	N/A
Air Quality Degradation	0	0	0	N/A

The sensitivity score reflects the extent to which a project would be adversely affected by exposure to a climate hazard. Exposure is rated on a scale of 1 to 5, with a score of 5 representing the greatest exposure.
The adaptive capacity of a project refers to its ability to manage and reduce vulnerabilities from projected climate hazards. Adaptive capacity is rated on a scale of 1 to 5, with a score of 5 representing the greatest ability to adapt.
The overall vulnerability scores are calculated based on the potential impacts and adaptive capacity assessments for each hazard. Scores do not include implementation of climate risk reduction measures.

6.3. Adjusted Climate Risk Scores

Climate Hazard	Exposure Score	Sensitivity Score	Adaptive Capacity Score	Vulnerability Score
Temperature and Extreme Heat	N/A	N/A	N/A	N/A
Extreme Precipitation	1	1	1	2
Sea Level Rise	1	1	1	2
Wildfire	1	1	1	2
Flooding	N/A	N/A	N/A	N/A
Drought	N/A	N/A	N/A	N/A
Snowpack Reduction	N/A	N/A	N/A	N/A
Air Quality Degradation	1	1	1	2

The sensitivity score reflects the extent to which a project would be adversely affected by exposure to a climate hazard. Exposure is rated on a scale of 1 to 5, with a score of 5 representing the greatest exposure.
The adaptive capacity of a project refers to its ability to manage and reduce vulnerabilities from projected climate hazards. Adaptive capacity is rated on a scale of 1 to 5, with a score of 5 representing the greatest ability to adapt.
The overall vulnerability scores are calculated based on the potential impacts and adaptive capacity assessments for each hazard. Scores include implementation of climate risk reduction measures.

6.4. Climate Risk Reduction Measures

7. Health and Equity Details

7.1. CalEnviroScreen 4.0 Scores

The maximum CalEnviroScreen score is 100. A high score (i.e., greater than 50) reflects a higher pollution burden compared to other census tracts in the state.

Indicator	Result for Project Census Tract
Exposure Indicators	—
AQ-Ozone	16.8
AQ-PM	19.6
AQ-DPM	73.9
Drinking Water	50.2
Lead Risk Housing	12.0
Pesticides	0.00
Toxic Releases	38.1
Traffic	88.8
Effect Indicators	—
CleanUp Sites	99.3
Groundwater	93.5
Haz Waste Facilities/Generators	96.1
Impaired Water Bodies	43.8
Solid Waste	75.7
Sensitive Population	—
Asthma	17.8
Cardio-vascular	31.2
Low Birth Weights	62.9
Socioeconomic Factor Indicators	—
Education	26.9
Housing	25.3
Linguistic	48.7
Poverty	14.7
Unemployment	45.8

7.2. Healthy Places Index Scores

The maximum Health Places Index score is 100. A high score (i.e., greater than 50) reflects healthier community conditions compared to other census tracts in the state.

Indicator	Result for Project Census Tract
Economic	—
Above Poverty	68.7925061
Employed	79.36609778
Median HI	89.15693571
Education	—
Bachelor's or higher	88.31002181
High school enrollment	100
Preschool enrollment	64.42961632
Transportation	—
Auto Access	56.16578981
Active commuting	48.06877967
Social	—
2-parent households	36.23764917
Voting	66.09778006
Neighborhood	—
Alcohol availability	46.61876043
Park access	62.01719492
Retail density	89.61888875
Supermarket access	23.44411651
Tree canopy	61.86321057
Housing	—
Homeownership	33.00397793
Housing habitability	71.61555242
Low-inc homeowner severe housing cost burden	73.55318876

Low-inc renter severe housing cost burden	86.48787373
Uncrowded housing	43.11561658
Health Outcomes	—
Insured adults	78.54484794
Arthritis	97.3
Asthma ER Admissions	87.5
High Blood Pressure	94.2
Cancer (excluding skin)	87.6
Asthma	98.2
Coronary Heart Disease	97.8
Chronic Obstructive Pulmonary Disease	98.8
Diagnosed Diabetes	93.4
Life Expectancy at Birth	91.5
Cognitively Disabled	94.6
Physically Disabled	87.9
Heart Attack ER Admissions	63.3
Mental Health Not Good	95.0
Chronic Kidney Disease	97.1
Obesity	97.1
Pedestrian Injuries	39.7
Physical Health Not Good	97.7
Stroke	97.8
Health Risk Behaviors	—
Binge Drinking	73.8
Current Smoker	92.2
No Leisure Time for Physical Activity	82.1
Climate Change Exposures	—

Wildfire Risk	0.0
SLR Inundation Area	13.7
Children	14.8
Elderly	73.9
English Speaking	66.5
Foreign-born	91.6
Outdoor Workers	78.1
Climate Change Adaptive Capacity	—
Impervious Surface Cover	26.4
Traffic Density	75.6
Traffic Access	56.3
Other Indices	—
Hardship	22.1
Other Decision Support	—
2016 Voting	71.9

7.3. Overall Health & Equity Scores

Metric	Result for Project Census Tract
CalEnviroScreen 4.0 Score for Project Location (a)	44.0
Healthy Places Index Score for Project Location (b)	81.0
Project Located in a Designated Disadvantaged Community (Senate Bill 535)	No
Project Located in a Low-Income Community (Assembly Bill 1550)	No
Project Located in a Community Air Protection Program Community (Assembly Bill 617)	No

a: The maximum CalEnviroScreen score is 100. A high score (i.e., greater than 50) reflects a higher pollution burden compared to other census tracts in the state.
b: The maximum Health Places Index score is 100. A high score (i.e., greater than 50) reflects healthier community conditions compared to other census tracts in the state.

7.4. Health & Equity Measures

No Health & Equity Measures selected.

7.5. Evaluation Scorecard

Health & Equity Evaluation Scorecard not completed.

7.6. Health & Equity Custom Measures

No Health & Equity Custom Measures created.

8. User Changes to Default Data

Screen	Justification
Construction: Construction Phases	See Construction Schedule
Construction: Off-Road Equipment	Construction Schedule
Construction: Architectural Coatings	Up to 10 acres paved - 6 percent 26136 sqft
Construction: Paving	Up to 10 acres repaved if undergrounding
Operations: Vehicle Data	Operation phase to remain unchanged
Operations: Architectural Coatings	No operational changes
Operations: Energy Use	No Operational changes
Operations: Water and Waste Water	No operational changes
Operations: Solid Waste	No Operational changes
Construction: Trips and VMT	Equipment Schedule
Operations: Consumer Products	no operational changes
Operations: Refrigerants	no operational changes

Appendix D

Final Arborist Report

Arborist Report

for

Silicon Valley Power – 115 kV T-line NRS-KRS Project

Santa Clara, California

Prepared for:

Aspen Environmental Group

235 Montgomery Street, Suite 935

San Francisco, CA 94104

Prepared by:

Kramer Botanical

PO Box 1582

El Granada, CA 94018

September 20, 2024

Arborist Report -

Silicon Valley Power – NRS to KRS 115 kV Transmission Line Project

Table of Contents

Arborist Report 0

Project Overview 1

Scope of Report 1

City of Santa Clara Tree Policies 1

Figure 1. Project Overview Map 2

Survey Methods 3

Survey Results 4

Tree Health/Condition 4

Protected Trees 4

Assessment of Project Impacts on Trees 5

Tree Protection for Retained Trees. 7

Appendix A: Tree Survey Results – March 2024 Survey 9

Appendix B: Tree Location Maps 10

Appendix C: Tree Protection "City of Santa Clara Arborist Notes" 11

This page intentionally left blank

Project Overview

Silicon Valley Power (SVP) is proposing to construct approximately 2.24 miles of a new 115 kV transmission line (Project) within the City of Santa Clara (City) limits in Santa Clara County, California. Based on a Project Description provided by Aspen Environmental Group (AEG) on April 5, 2024, the proposed transmission line will begin at the SVP Northern Receiving Station (NRS), approximately 0.2 miles southeast of Levi's Stadium, and would travel south down Lafayette Street, Bassett Street and Duane Avenue to end at the SVP Kifer Receiving Station (KRS), approximately 0.1 miles northwest of the intersection of Lafayette Street and Central Expressway.

Two different Options have been proposed for the Project. Under Option 1, the entire Project would be overhead, with transmission lines on new poles. Under Option 2, the Project would be underground from the median of Lafayette Street near NRS to approximately 300 feet south of the intersection of Lafayette Street and Agnew Road, then overhead south of Agnew Road to KRS.

Figure 1 provides an overview of the proposed SVP – NRS-KRS 115kV Transmission-line (T-line) Project route and shows proposed alignments for both Option 1 and Option 2.

Scope of Report

This arborist report provides the following:

- An inventory of trees within and immediately adjacent to proposed SVP – 115 kV T-Line NRS-KRS Project boundaries. Project boundaries extend 25 feet on either side of the Project centerline. Boundaries are shown on tree location Maps 1-9, provided with this report as Appendix B.
- A general assessment of health/condition for each tree surveyed.
- An assessment of likely project impacts to trees within the Project area.
- A Tree Protection Plan for trees to be retained.

City of Santa Clara Tree Policies

City of Santa Clara General Plan policies which may apply to trees documented by this report for the SVP NRS-KRS 115kV T-line Project include the following:

5.10.1-P4 Protect all cedars, redwoods, oaks, olives, bay laurel and pepper trees of any size, and all other trees over 36 inches in circumference (approximately 11.5 inches in diameter) measured at 48 inches above-grade on private and public property as well as in the public right-of-way.

5.10.1-P3 Require preservation of all City-designated heritage trees listed in the Heritage Tree Appendix 8.10 of the General Plan

Figure 1. Project Overview Map.

Survey Methods

An initial tree survey for the SVP NRS-KRS 115 kV T-line Project was conducted by Kramer Botanical certified arborist Neal Kramer in March 2024, with Project site visits on March 7, 13, 14, 16 and 20. All trees within Project boundaries, or immediately adjacent with canopy overhanging a Project boundary, having at least one woody trunk with a diameter of 3 inches or greater at 48 inches above the ground were surveyed for this report. Newly planted trees with trunk diameters of less than 3 inches were also included in the survey.

On September 13, 2024, the entire Project alignment was revisited to update information for this report to reflect Project revisions that have occurred since the initial March survey. During the September revisit, the current condition of each tree within Project boundaries was reverified.

Each surveyed tree has been marked with a round aluminum tag, tags numbered 101 – 177 and tags numbered 189 – 266. Tag numbers are generally sequential along the alignment, with tag number 101 starting at the north end of the project alignment. Tree tags 263-266 represent tree additions following alignment revisions made after the initial March 2024 tree survey. As a result, these tree numbers are out of sequence along the alignment. Tree 263 is located at the north end of the Lafayette St section of the alignment, and trees 264-266 are located at the north end of the Basset St section of the alignment. Tree tags 178 – 188 were trees that were a part of the original March 2024 tree survey but are no longer within the currently proposed alignment. Therefore, they have been removed for this report.

GPS coordinates for each tree were documented using ArcGIS Field Maps paired with a Bad Elf Flex, Mini GNSS Receiver to enhance accuracy. Information regarding the tree species, trunk diameter at 48 inches above the ground, and the approximate canopy spread, and height was collected for each tree.

Health and structure were evaluated for each tree using a basic ground-based inspection, and a general condition rating was assigned using the categories shown below. Individual tree ratings consider a variety of factors, including overall tree vigor, evidence of decay, insects or diseases, and/or any other structural defects observed.

Good: 80-100% healthy foliage and no significant defects.

Fair: 50-79% healthy foliage and/or minor defects.

Poor: 5-49% healthy foliage and/or other significant defects.

Based on maps provided by AEG on September 12, 2024, which show the proposed transmission alignments and transmission pole positions for both overhead alignment Option 1, and underground alignment Option 2, and considering a 25-foot buffer on either side of the transmission centerline, an assessment of project impacts to trees was made. Each tree was assigned a project impact code using one of the following three categories:

(R) Tree may need to be removed for underground trenching, overhead pole placement, or for transmission line clearance.

(CP) Clearance pruning <u>may</u> be required, but trees can likely be retained.

(-) No impact expected.

Survey Results

A total of 155 trees along the Project Alignments were documented for this report. A summary of all 155 trees is provided with this report as Appendix A. Appendix A lists each surveyed tree sequentially by tag number, and includes information regarding the common and scientific name, trunk diameter at 48 inches above the ground, approximate canopy spread and height, City protected status, and a general tree condition rating at the time of the September 2024 survey. Assessed Project impacts for each tree are indicated in Appendix A for both Project Option 1 (overhead) and Project Option 2 (underground and overhead). Specific notes regarding individual trees are included where relevant.

Approximate tree locations along the transmission alignment are shown on aerial maps 1-9 in Appendix B.

Trees documented for this report include 29 different species. Table 1 below lists each species by common and scientific name in descending order of abundance and includes the total number of each species documented.

Tree Health/Condition

Of the 155 trees documented for this report, 83 trees (54%) are rated in *good* condition, 61 trees (39%) are in *fair* condition and 11 trees (7%) are in *poor* condition. Specific condition ratings for individual trees are included in Appendix A.

Unless expressed otherwise, tree condition assessments for this report were limited to visual examination of accessible tree parts without dissection, excavation, probing, or coring. There is no warranty or guarantee, expressed or implied, that problems or deficiencies regarding the trees discussed in this report may not arise in the future.

Protected Trees

The City of Santa Clara General Plan (5.10.1-P4) defines "protected trees" as "all healthy cedars, redwoods, oaks, olives, bay laurel and pepper trees of any size and all other trees over 36 inches in circumference (approximately 11.5 inches in diameter) measured at 48 inches above-grade".

Eighty-one (81) of the 155 trees surveyed for this report qualify as "protected trees" under the City of Santa Clara General Plan. Each protected tree is indicated as such in Appendix A under the "Santa Clara Protected Tree" column.

No "Heritage trees" are present within or immediately adjacent to the proposed SVP NRS-KRS 115 kV T-line Project boundaries.

Table 1: Tree species documented along the Project alignments, by descending order of abundance (September 2024)

Common Name	Scientific Name	Trees Documented	Native/ Non-native
Olive	*Olea europea*	28	Non-
Shamel ash	*Fraxanus uhdei*	17	Non-
Chinese Elm	*Ulmus parvifolia*	16	Non-
Glossy privet	*Ligustrum lucidum*	13	Non-
Ginkgo	*Ginkgo biloba*	13	Non-
American elm	*Ulmus americana*	12	Non-
Jacaranda	*Jacaranda mimosifolia*	11	Non-
Crape myrtle	*Lagerstroemia indica*	11	Non-
Canary Island Pine	*Pinus canariensis*	5	Non-
Deodar cedar	*Cedrus deodara*	3	Non-
Bradford pear	*Pyrus calleryana*	3	Non-
Evergreen pear	*Pyrus kawakamii*	3	Non-
Blackwood acacia	*Acacia melanoxylon*	2	Non-
Red ironbark	*Eucalyptus sideroxylon*	2	Non-
Purple-leaf plum	*Prunus cerasifera 'Atropurpurea'*	2	Non-
Evergreen pear	*Pyrus kawakamii*	3	Non-
Linden	*Tillia* sp.	2	Non-
Red Horse chestnut	*Aesculus* x *carnea*	1	Non-
Tree of heaven	*Ailanthus altissima*	1	Non-
Horsetail tree	*Casuarina* sp.	1	Non-
Nichol's willow-leafed peppermint	*Eucalyptus nicholii*	1	Non-
Eucalyptus	*Eucalyptus* sp.	1	Non-
Liquidambar	*Liquidambar styraciflua*	1	Non-
Southern Magnolia	*Magnolia grandiflora*	1	Non-
Italian stone pine	*Pinus pinea*	1	Non-
Fremont cottonwood	*Populus fremontii*	1	Native
Holly oak	*Quercus ilex*	1	Non-
Southern live oak	*Quercus virginiana*	1	Non-
Water gum	*Tristaniopsis laurina*	1	Non-

Assessment of Project Impacts on Trees

Some trees along the Project alignment will need to be removed for the placement of new transmission line structures, or for installation of underground lines, and some trees along the alignment will need to be trimmed to create minimum clearance distances around new structures and transmission lines.

According to tree clearance guidelines provided in the July 2024 “Draft Mitigated Negative Declaration and Supporting Initial Study” for the Project, in general, trees that are located below the 115 kV transmission line would need to be trimmed so that they are no taller than about 25 feet to 30 feet above ground. Tree branches that are closer than 5 feet vertically or 10 feet horizontally to any conductor or wire (with or without wind) would be trimmed to meet the minimum clearance.

The Project Impact Code column in Appendix A of this report indicates the likely impacts to individual trees using impact codes described above in the Survey Methods section of this report. Table 2 and Table 3 below compare impacts to trees for Project Option 1 vs. Project Option 2 by impact category.

Table 2: Impacts to Trees - Option 1 (All Overhead)				
	To be Removed	**May Require Clearance Pruning**	**No Impact Expected**	**Total**
All trees	4	39	112	155
"Protected" trees	3	29	49	81

Table 3: Impacts to Trees - Option 2 (Underground and Overhead)				
	To be Removed	**May Require Clearance Pruning**	**No Impact Expected**	**Total**
All trees	3	38	114	155
"Protected" trees	2	28	51	81

Table 4 below lists trees that are projected to be removed for Project Alignment Option 1 vs. Alignment Option 2 by survey tree tag number.

Table 4: Trees Projected for Removal – Alignment Option 1 vs. Alignment Option 2
(City Protected trees shown in bold font)

	Option 1	**Option 2**	
Olive	**tree #132**	**-**	
Deodar cedar	**tree #177**	**tree #177**	
Ginkgo	tree #236	tree #236	
Horsetail tree	tree #263	tree #263	
Total	4 trees	3 trees	

The above assessment of project impacts on individual trees is based on information available for this report on September 12, 2024. During Project development processes, in consultation with the City arborist or City designated arborist, it may be determined that additional trees will need to be removed for the Project. Or it could also be determined that with special protection measures, a tree listed to be removed can be retained. After the Project is completed, a post construction tree inventory is recommended to confirm the actual number of trees removed for the Project.

Tree Protection for Retained Trees.

Development activities have the potential to cause damaging impacts to trees to be retained along the Project alignment. Tree root systems can be functionally compromised by soil compaction resulting from heavy equipment operating within tree root zones, and roots can be damaged or lost during excavation activities related to undergrounding, or installation of foundations for new transmission line poles. Furthermore, if not properly managed construction equipment operating in the vicinity of retained trees can cause significant and irreversible damage to tree trunks and canopies.

To minimize potential damage and ensure the long-term health, stability and survival of retained trees, measures outlined in the Tree Protection Plan below shall be implemented.

TREE PROTECTION PLAN

Tree Protection Zone

- A Tree Protection Zone (TPZ) shall be defined by the City arborist or City designated arborist for all trees that could be impacted by project activities and are intended for preservation. A TPZ will typically include all area within the dripline of trees to be retained.

- The TPZ will be protected by a fenced enclosure to prevent unauthorized access during project activities. At minimum, TPZ fencing will be constructed of 4-foot-tall high-visibility orange ESA fencing hung from a heavy wire attached to firmly anchored T-posts at no more than 8 foot spacing. Warning signs (e.g. "WARNING - Tree Protection Zone – This fence shall not be moved without approval by the City Arborist or a City designated arborist") shall be prominently displayed and visible from all sides of the TPZ fencing.

- TPZ fencing shall be installed prior to any demolition, grading, staging, stockpiling, or any other construction activities within 50 feet of a designated TPZ, unless otherwise approved by the City Arborist or a City designated arborist. And unless otherwise approved, the TPZ fencing shall remain in place until all construction activities are complete on the affected construction segment unless otherwise approved.

- No construction, staging, or storage of materials, equipment or vehicles shall occur within a TPZ without advanced approval and oversite by the City arborist or a City designated arborist.

- No excess soil, excess concrete or concrete wash, chemicals, refuse or other waste shall be placed within the TPZ.

- The primary contractor shall be responsible for maintaining TPZ fencing and enforcing all TPZ guidelines outlined above throughout the course of the Project.

Site Grading and Excavation and Trenching

- Soil disturbance or grade changes within a TPZ are not permitted unless approved by the City arborist or a City designated arborist. Any approved grading, excavation or trench work within a TPZ will be field staked and inspected by the City arborist or a City designated arborist prior to implementation.

- All approved grading, excavation and trenching work within a TPZ shall be performed under the observation of a City designated Arborist.

- All grading shall be designed to provide positive drainage away from the base of trees to be preserved and shall not create ponding within a TPZ.

- Grade changes in the vicinity of trees to be preserved should remain as close to natural grade as possible.

Canopy Pruning

- To the extent possible, any necessary canopy pruning shall be completed prior to the commencement of construction activities.

- Pruning shall be performed by a qualified tree service worker under the direction of a certified arborist following International Society of Arboriculture tree pruning best management practices. Pruning shall not be performed by construction personnel.

Root Pruning

- Any roots one inch and larger requiring removal shall be cut cleanly in sound tissue. No pruning seals or paint shall be used on wounds.

- Roots two inches and greater shall remain in place and undamaged to the extent practicable. If removal is required, cuts shall be made with the approval and under the direction of a certified arborist.

Communication for Tree Protection Compliance

- A preconstruction meeting shall be arranged for the City arborist or City designated arborist to meet with the Project Engineer, Project Contractors, Onsite Project Supervisors, Tree Pruning and Removal Contractor, and/or other appropriate Project Leads to review and secure a commitment to compliance with all tree protection measures.

The City of Sana Clara provides additional guidelines for tree protection. These are outlined in “City of Santa Clara Arborist notes”, a copy of which is included with this report as Appendix C.

Appendix A: Tree Survey Results – March/September 2024

Appendix A: Tree Survey Results 2024 - Silicon Valley Power NRS-KRS Transmission Line Project Alignment, Santa Clara, Ca

rev. nk9/18/24

Tree #	Common Name	*Scientific Name*	Diameter (inches) at 48" above grade[1]	Canopy Spread (feet)	Tree Height (feet)	Santa Clara Protected Tree (P)	Project Impact Code[2]	General Condition[3]	Comments
101	Crape myrtle	*Lagerstroemia indica*	5	15	15		-	Fair	Canopy buried under trumpet vine
102	Crape myrtle	*Lagerstroemia indica*	5	12	18		-	Fair	Canopy buried under trumpet vine
103	Jacaranda	*Jacaranda mimosifolia*	10	24	20		-	Good	
104	Jacaranda	*Jacaranda mimosifolia*	9	21	18		-	Fair	thin canopy
105	Jacaranda	*Jacaranda mimosifolia*	8	18	16		-	Fair	thin canopy
106	Jacaranda	*Jacaranda mimosifolia*	6	15	12		-	Fair	thin canopy
107	Jacaranda	*Jacaranda mimosifolia*	10	24	18		-	Fair	thin canopy
108	Jacaranda	*Jacaranda mimosifolia*	7	16	16		-	Fair	thin canopy
109	Jacaranda	*Jacaranda mimosifolia*	9	22	18		-	Good	
110	Jacaranda	*Jacaranda mimosifolia*	8	15	15		-	Fair	thin canopy
111	Jacaranda	*Jacaranda mimosifolia*	9	20	14		-	Good	
112	Jacaranda	*Jacaranda mimosifolia*	5	14	15		-	Fair	thin canopy
113	Jacaranda	*Jacaranda mimosifolia*	6	12	14		-	Good	
114	Olive	*Olea europaea*	5+5+7	17	18	P	-	Good	
115	Olive	*Olea europaea*	7+6+7	20	20	P	-	Good	
116	Olive	*Olea europaea*	5+3+3	11	12	P	-	Fair	
117	Olive	*Olea europaea*	5+3+3+4	15	12	P	-	Good	
118	Olive	*Olea europaea*	5+4+4+2	16	14	P	-	Good	
119	Olive	*Olea europaea*	4+3+3	13	12	P	-	Good	
120	Olive	*Olea europaea*	3+5+5	16	14	P	CP	Fair	Pole #12
121	Olive	*Olea europaea*	4+3+5	13	14	P	-	Fair	
122	Olive	*Olea europaea*	4+7+6	17	16	P	-	Fair	
123	Olive	*Olea europaea*	5+4	12	12	P	-	Good	
124	Olive	*Olea europaea*	3+5	11	11	P	-	Good	
125	Olive	*Olea europaea*	5+5+3	14	14	P	-	Good	
126	Olive	*Olea europaea*	5+5+5	14	14	P	-	Fair	
127	Olive	*Olea europaea*	5+6	13	13	P	-	Good	
128	Olive	*Olea europaea*	6+4	15	15	P	-	Good	
129	Olive	*Olea europaea*	4+3+4	12	12	P	-	Good	
130	Olive	*Olea europaea*	4	9	9	P	-	Good	
131	Olive	*Olea europaea*	4+3+3	16	16	P	-	Good	
132	Olive	*Olea europaea*	4+6	12	12	P	R	Good	Pole #13

[1]More than one diameter in the trunk diameter column represent multiple stems arising below 48 inches above the ground.

[2] Project Impact code: **R** = Remove for pole placement or line clearance, **CP** = May require pruning for line clearance, **(-)** = No impacts expected.

[3] Condition: **Good** = 80-100% healthy foliage and no significant defects; **Fair** = 50-79% healthy foliage and/or minor defects; **Poor** = 5-49% healthy foliage and/or other significant defects; **Dead** = less than 5% healthy foliage.

Tree #	Common Name	*Scientific Name*	Diameter (inches) at 48" above grade[1]	Canopy Spread (feet)	Tree Height (feet)	Santa Clara Protected Tree (P)	Project Impact Code[2]	General Condition[3]	Comments
133	Olive	*Olea europaea*	7	10	10	P	-	Good	
134	Olive	*Olea europaea*	4+5+3	12	12	P	-	Good	
135	Red ironbark	*Eucalyptus sideroxylon*	21	28	32	P	CP	Fair	History of branch removals, water sprouts
136	Canary Island pine	*Pinus canariensis*	12	16	34	P	CP	Good	
137	Canary Island pine	*Pinus canariensis*	16	24	30	P	CP	Good	
138	Canary Island pine	*Pinus canariensis*	13	24	36	P	-	Good	
139	Eucalyptus	*Eucalyptus* sp.	18	36	40	P	-	Good	30° lean SW
140	Horse chestnut	*Aesculus* x *carnea*	4	8	11		-	Fair	Cracked bark at base
141	Chinese elm	*Ulmus parvifolia*	7	28	25		-	Fair	40° lean SE, soil lifted on NW side
142	Nichol's willow-leafed	*Eucalyptus nicholii*	30	40	35	P	CP	Fair	Thin canopy, previous topped for utility lines
143	Glossy privet	*Ligustrum lucidum*	14	18	24	P	-	Good	
144	Chinese elm	*Ulmus parvifolia*	5	18	20		-	Fair	
145	Chinese elm	*Ulmus parvifolia*	6	25	22		-	Fair	
146	Magnolia	*Magnolia grandiflora*	8	16	24		-	Good	
147	Glossy privet	*Ligustrum lucidum*	15	25	26	P	-	Good	
148	Chinese elm	*Ulmus parvifolia*	7	28	25		-	Fair	Thin canopy
149	Glossy privet	*Ligustrum lucidum*	14	30	25	P	-	Good	
150	Chinese elm	*Ulmus parvifolia*	6	22	18		-	Fair	Thin canopy
151	Chinese elm	*Ulmus parvifolia*	see comment	16	17		-	Fair	Numerous small stems from base, 1-3" dia.
152	Chinese elm	*Ulmus parvifolia*	8	28	28		-	Fair	Late leaf break
153	Chinese elm	*Ulmus parvifolia*	7	24	26		-	Good	Late leaf break
154	Chinese elm	*Ulmus parvifolia*	6	25	25		-	Good	
155	Glossy privet	*Ligustrum lucidum*	13	25	24	P	-	Good	
156	Glossy privet	*Ligustrum lucidum*	15	30	27	P	CP	Good	
157	Chinese elm	*Ulmus parvifolia*	13	35	32	P	CP	Good	
158	Glossy privet	*Ligustrum lucidum*	13	25	24	P	-	Good	
159	Glossy privet	*Ligustrum lucidum*	7+8+8+13	26	30	P	CP	Fair	20% dead branches NE side
160	Glossy privet	*Ligustrum lucidum*	17	27	25	P	-	Good	
161	Glossy privet	*Ligustrum lucidum*	15	25	25	P	-	Fair	Thin canopy, cracked bark SW side. Root damage from recent concrete work?
162	Linden	*Tilia* sp.	33	25	35	P	-	Poor	Significant basal decay cavity, poor response growth. Hard prune, epicormic sprouts
163	Linden	*Tilia* sp.	24	32	44	P	-	Fair	
164	Liquidambar	*Liquidambar styraciflua*	10	20	30		-	Good	
165	Chinese elm	*Ulmus parvifolia*	20	43	30	P	-	Good	
166	Glossy privet	*Ligustrum lucidum*	15	21	28	P	CP	Good	Canopy unbalanced to NW

[1]More than one diameter in the trunk diameter column represent multiple stems arising below 48 inches above the ground.

[2] Project Impact code: **R** = Remove for pole placement or line clearance, **CP** = May require pruning for line clearance, **(-)** = No impacts expected.

[3] Condition: **Good** = 80-100% healthy foliage and no significant defects; **Fair** = 50-79% healthy foliage and/or minor defects; **Poor** = 5-49% healthy foliage and/or other significant defects; **Dead** = less than 5% healthy foliage.

Tree #	Common Name	*Scientific Name*	Diameter (inches) at 48" above grade[1]	Canopy Spread (feet)	Tree Height (feet)	Santa Clara Protected Tree (P)	Project Impact Code[2]	General Condition[3]	Comments
167	Deodar cedar	*Cedrus deodara*	25	42	60	P	-	Good	
168	Chinese elm	*Ulmus parvifolia*	13	35	35	P	-	Poor	8" dia. branch failure at 8' above the ground, bark stripped to base of tree (N side)
169	Chinese elm	*Ulmus parvifolia*	13	28	30	P	CP	Good	
170	Chinese elm	*Ulmus parvifolia*	17	44	36	P	-	Good	
171	Deodar cedar	*Cedrus deodara*	18	28	30	P	CP	Good	Previously topped for utility line
172	Glossy privet	*Ligustrum lucidum*	13	18	28	P	CP	Good	
173	Glossy privet	*Ligustrum lucidum*	14	25	30	P	CP	Good	
174	Glossy privet	*Ligustrum lucidum*	13	20	24	P	-	Fair	Significant dead branches E side of tree
175	Southern live oak	*Quercus virginiana*	19	42	26	P	-	Good	
176	Fremont cottonwood	*Populus fremontii ssp. fremontii*	43	60	65	P	-	Good	
177	Deodar cedar	*Cedrus deodara*	21	30	30	P	R	Poor	Pole #19. Hard pruned for utility lines, 20% dead branches
189	Blackwood acacia	*Acacia melanoxylon*	5+6+3	15	28		-	Good	
190	Blackwood acacia	*Acacia melanoxylon*	6+7+4	18	25		-	Good	
191	Shamel ash	*Fraxinus uhdei*	10	30	32		-	Fair	Codominant with included bark at 8'
192	Shamel ash	*Fraxinus uhdei*	16	30	36		CP	Fair	Pole #22. Thin canopy south side
193	Shamel ash	*Fraxinus uhdei*	4+7+4	12	18		CP	Poor	Pole #22. Dead top removed
194	Shamel ash	*Fraxinus uhdei*	16	30	34	P	CP	Good	
195	Shamel ash	*Fraxinus uhdei*	15	25	35	P	CP	Good	
196	Shamel ash	*Fraxinus uhdei*	10	18	30		CP	Fair	Bark seam, flush cuts
197	Shamel ash	*Fraxinus uhdei*	13+5	18	28	P	CP	Fair	Main stem removed @ 5', codominants weak attachments
198	Shamel ash	*Fraxinus uhdei*	10	10	27		CP	Poor	Main stem removed @ 5', 1 codominant dead
199	Shamel ash	*Fraxinus uhdei*	11	11	20		-	Fair	
200	Shamel ash	*Fraxinus uhdei*	8	8	18		-	Fair	
201	Shamel ash	*Fraxinus uhdei*	12	12	22	P	-	Good	
202	Shamel ash	*Fraxinus uhdei*	10	10	24		CP	Poor	Pole #23. 50% deadwood
203	Shamel ash	*Fraxinus uhdei*	12	12	24	P	-	Fair	20% deadwood
204	Shamel ash	*Fraxinus uhdei*	6	8	18		-	Poor	Main stem dead @ 6'
205	Shamel ash	*Fraxinus uhdei*	9	9	26		CP	Poor	50% deadwood, weak new growth
206	Shamel ash	*Fraxinus uhdei*	4+4+3+5	15	20		-	Fair	
207	Shamel ash	*Fraxinus uhdei*	10	16	22		-	Fair	Thin canopy
208	Italian stone pine	*Pinus pinea*	14	24	24	P	-	Fair	Significant needle drop 30% of W side

[1]More than one diameter in the trunk diameter column represent multiple stems arising below 48 inches above the ground.

[2] Project Impact code: **R** = Remove for pole placement or line clearance, **CP** = May require pruning for line clearance, **(-)** = No impacts expected.

[2] Condition: **Good** = 80-100% healthy foliage and no significant defects; **Fair** = 50-79% healthy foliage and/or minor defects; **Poor** = 5-49% healthy foliage and/or other significant defects; **Dead** = less than 5% healthy foliage.

Tree #	Common Name	*Scientific Name*	Diameter (inches) at 48" above grade[1]	Canopy Spread (feet)	Tree Height (feet)	Santa Clara Protected Tree (P)	Project Impact Code[2]	General Condition[3]	Comments
209	Red ironbark	*Eucalyptus sideroxylon*	29	38	42	P	-	Good	
210	Olive	*Olea europaea*	10+7+9	26	22	P	-	Good	
211	Olive	*Olea europaea*	13+12+13+14	34	32	P	CP	Fair	Thin canopy and dead branches on SW side
212	Olive	*Olea europaea*	6+7+8+8+11	28	24	P	-	Fair	30% dead canopy
213	Olive	*Olea europaea*	7+9+10+7	24	24	P	-	Good	
214	Olive	*Olea europaea*	8+8+12+8+11	30	34	P	CP	Good	
215	Olive	*Olea europaea*	11+8+7	24	22	P	CP	Good	Pole #30
216	Olive	*Olea europaea*	13+10+13+11	24	30	P	CP	Fair	Thin canopy SE side
217	Evergreen pear	*Pyrus kawakamii*	17	30	30	P	CP	Fair	Fireblight - branch tip dieback
218	Evergreen pear	*Pyrus kawakamii*	10	30	24		-	Fair	Thin canopy
219	American elm	*Ulmus americana*	18+15	40	45	P	CP	Fair	Codominant with included bark from base
220	American elm	*Ulmus americana*	11	20	42		CP	Fair	
221	American elm	*Ulmus americana*	10+5+8+11+11+12	35	45	P	CP	Fair	6 stems from base
222	American elm	*Ulmus americana*	8+11	28	36		CP	Fair	Codominant, included bark from base
223	American elm	*Ulmus americana*	9	25	42		CP	Fair	Canopy unbalanced NE
224	American elm	*Ulmus americana*	8	22	36		CP	Fair	Canopy unbalanced W
225	American elm	*Ulmus americana*	16+10	32	42	P	-	Fair	Included bark, canopy unbalanced SE
226	American elm	*Ulmus americana*	4+4	28	22		-	Poor	Included bark, canopy unbalanced SW
227	American elm	*Ulmus americana*	8	22	45		-	Poor	Trunk imbedded in chain link fence
228	American elm	*Ulmus americana*	8+8	40	42		-	Fair	
229	American elm	*Ulmus americana*	8	25	42		-	Fair	Canopy unbalanced E
230	American elm	*Ulmus americana*	11	40	45		-	Fair	Canopy unbalanced W
231	Ginkgo	*Ginkgo biloba*	12	15	24	P	-	Good	
232	Ginkgo	*Ginkgo biloba*	8	14	18		-	Good	
233	Ginkgo	*Ginkgo biloba*	13	16	25	P	-	Good	
234	Ginkgo	*Ginkgo biloba*	8	13	20		-	Good	
235	Ginkgo	*Ginkgo biloba*	8	11	20		-	Good	
236	Ginkgo	*Ginkgo biloba*	8	14	18		R	Good	Pole #35
237	Ginkgo	*Ginkgo biloba*	6	10	16		-	Good	
238	Ginkgo	*Ginkgo biloba*	3	8	12		-	Good	
239	Ginkgo	*Ginkgo biloba*	6	10	16		-	Good	
240	Water gum	*Tristaniopsis laurina*	8	15	16		-	Good	
241	Ginkgo	*Ginkgo biloba*	6	9	14		-	Good	
242	Ginkgo	*Ginkgo biloba*	8	12	18		-	Good	
243	Purple-leaf plum	*Prunus cerasifera 'Atropurpurea'*	8	8	14		-	Good	

[1]More than one diameter in the trunk diameter column represent multiple stems arising below 48 inches above the ground.

[2] Project Impact code: **R** = Remove for pole placement or line clearance, **CP** = May require pruning for line clearance, **(-)** = No impacts expected.

[2] Condition: **Good** = 80-100% healthy foliage and no significant defects; **Fair** = 50-79% healthy foliage and/or minor defects; **Poor** = 5-49% healthy foliage and/or other significant defects; **Dead** = less than 5% healthy foliage.

Tree #	Common Name	*Scientific Name*	Diameter (inches) at 48" above grade[1]	Canopy Spread (feet)	Tree Height (feet)	Santa Clara Protected Tree (P)	Project Impact Code[2]	General Condition[3]	Comments
244	Purple-leaf plum	*Prunus cerasifera 'Atropurpurea'*	7+8	8	14		-	Good	
245	Crape myrtle	*Lagerstroemia indica*	9	18	18		-	Good	Canopy full green
246	Crape myrtle	*Lagerstroemia indica*	8	18	18		CP	Good	Trunk < 10 feet from pole #36. Canopy full green
247	Crape myrtle	*Lagerstroemia indica*	2	6	12		-	Fair	Recent planting, waersprouts from base
248	Ginkgo	*Ginkgo biloba*	3	8	10		-	Good	
249	Ginkgo	*Ginkgo biloba*	5	8	16		-	Good	
250	Tree of heaven	*Ailanthus altissima*	4+3+3	10	16		-	Poor	Root sprouts, topped @ 16'
251	Holly oak	*Quercus ilex*	3+9+6+8	18	10	P	-	Good	Topped @10" but full green canopy
252	Bradford pear	*Pyrus calleryana 'Bradford'**	13	24	30	P	-	Good	
253	Canary Island pine	*Pinus canariensis*	14	16	40	P	-	Good	
254	Bradford pear	*Pyrus calleryana 'Bradford'**	14	28	30	P	-	Good	
255	Canary Island pine	*Pinus canariensis*	8	14	22		-	Good	
256	Bradford pear	*Pyrus calleryana 'Bradford'**	30	30	25	P	CP	Good	
257	Crape myrtle	*Lagerstroemia indica*	7	14	24		-	Fair	
258	Crape myrtle	*Lagerstroemia indica*	6	15	16		-	Fair	
259	Crape myrtle	*Lagerstroemia indica*	6	14	16		-	Fair	
260	Crape myrtle	*Lagerstroemia indica*	6	14	16		-	Fair	
261	Crape myrtle	*Lagerstroemia indica*	6	18	16		-	Fair	Canopy buried under trumpet vine
262	Crape myrtle	*Lagerstroemia indica*	6	12	16		-	Fair	Canopy buried under trumpet vine
263	Horsetail tree	*Casuarina sp.*	20	33	50	P	R	Good	Pole #4. Tree located in the median at N end of the Lafayette St alignment
264	Evergreen pear	*Pyrus kawakamii*	20	34	30	P		Fair	Fireblight - branch tip dieback. Tree located at N end of the Basset St alignment.
265	Chinese elm	*Ulmus parvifolia*	20	33	25	P		Good	Tree located at N end of the Bassett St alignment
266	Chinese elm	*Ulmus parvifolia*	17	36	25	P		Good	Tree located at N end of the Bassett St alignment

[1]More than one diameter in the trunk diameter column represent multiple stems arising below 48 inches above the ground.

[2] Project Impact code: **R** = Remove for pole placement or line clearance, **CP** = May require pruning for line clearance, **(-)** = No impacts expected.

[2] Condition: **Good** = 80-100% healthy foliage and no significant defects; **Fair** = 50-79% healthy foliage and/or minor defects; **Poor** = 5-49% healthy foliage and/or other significant defects; **Dead** = less than 5% healthy foliage.

Appendix B: Tree Location Maps

Scale: 1:1,200
1 inch = 100 feet
100 0 100 feet

Tree
Tower Structure
Option 1: Overhead Transmission Line
Option 2: Underground Transmission Line
Survey Area

Silicon Valley Power
NRS to KRS
115 kV Transmission Line

Tree Survey Results

Sources: Aspen, 2024; Esri, 2024; NearMap, 2024.

Scale: 1:1,200
1 inch = 100 feet
100 0 100 feet

Tree
Tower Structure
Option 1: Overhead Transmission Line
Option 2: Underground Transmission Line
Survey Area

Silicon Valley Power
NRS to KRS
115 kV Transmission Line

Tree Survey Results

Sources: Aspen, 2024; Esri, 2024; NearMap, 2024.

Scale: 1:1,200
1 inch = 100 feet
100 0 100 feet

Tree
Tower Structure
Option 1: Overhead Transmission Line
Option 2: Underground Transmission Line
Survey Area

Silicon Valley Power
NRS to KRS
115 kV Transmission Line

Tree Survey Results

Sources: Aspen, 2024; Esri, 2024; NearMap, 2024.

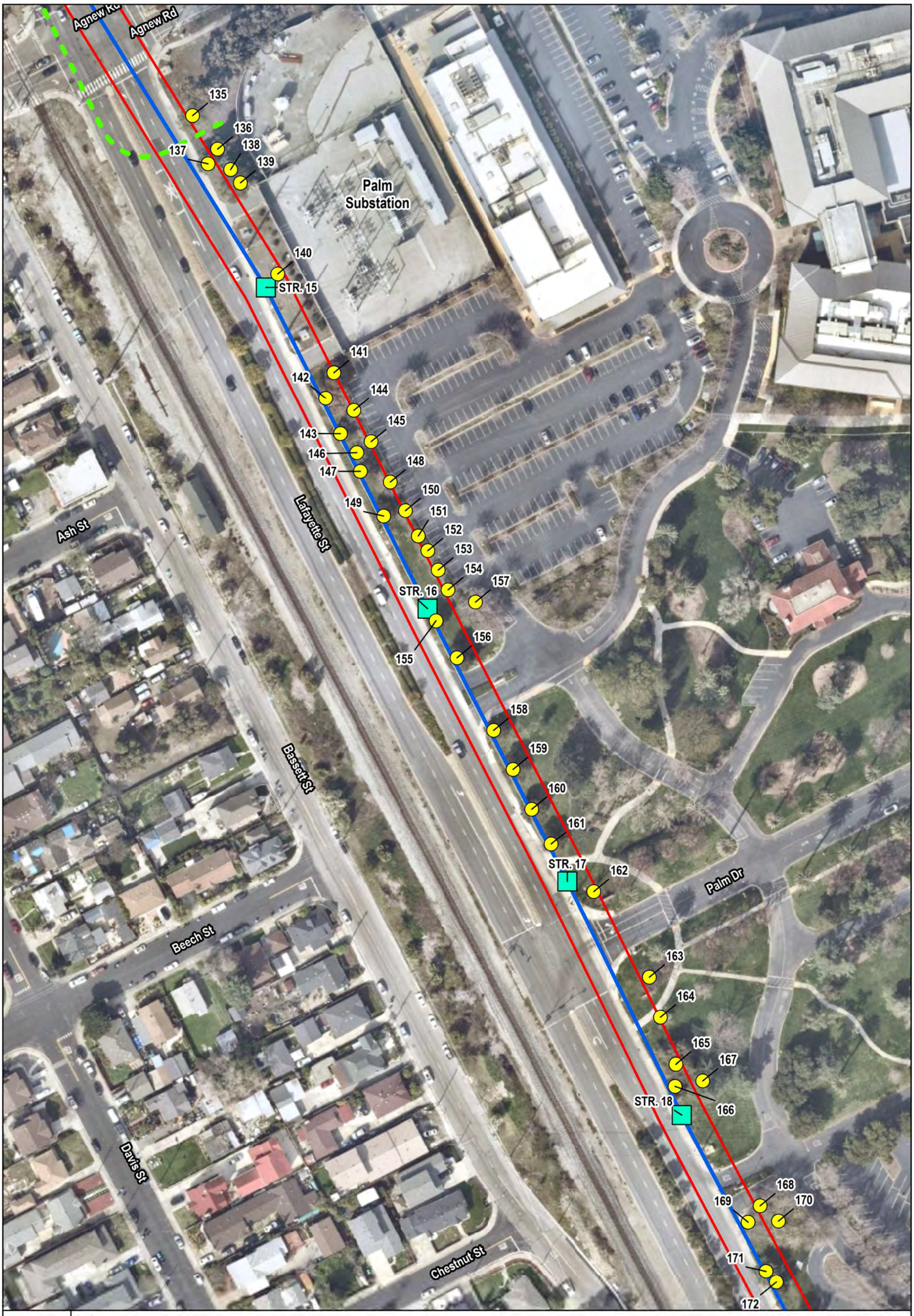

Scale: 1:1,200
1 inch = 100 feet
100 0 100 feet

Tree
Tower Structure
Option 1: Overhead Transmission Line
Option 2: Underground Transmission Line
Survey Area

Silicon Valley Power
NRS to KRS
115 kV Transmission Line

Tree Survey Results

Sources: Aspen, 2024; Esri, 2024; NearMap, 2024.

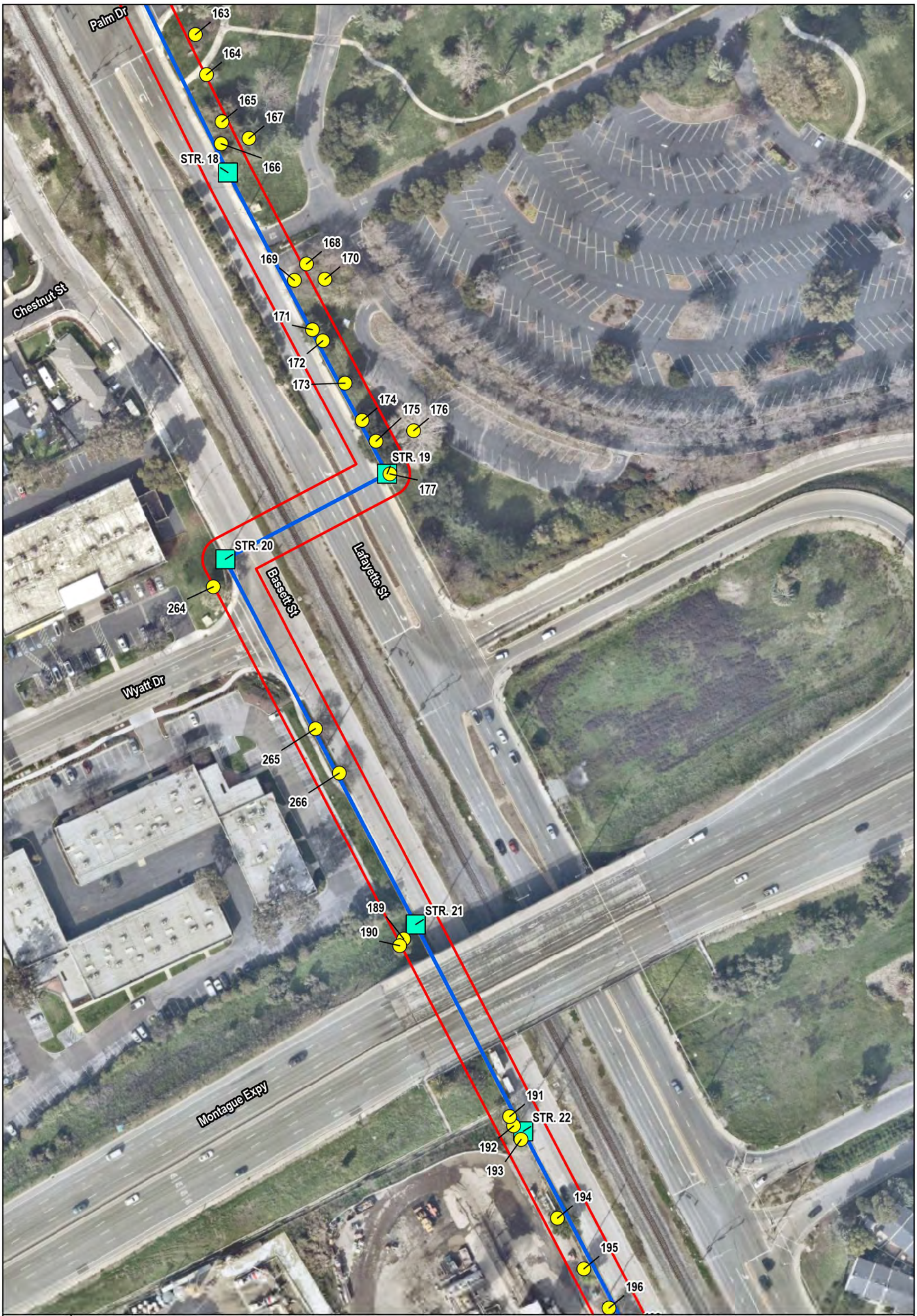

Scale: 1:1,200
1 inch = 100 feet
100 0 100 feet

Tree
Tower Structure
Option 1: Overhead Transmission Line
Option 2: Underground Transmission Line
Survey Area

Silicon Valley Power
NRS to KRS
115 kV Transmission Line

Tree Survey Results

Sources: Aspen, 2024; Esri, 2024; NearMap, 2024.

Scale: 1:1,200
1 inch = 100 feet
100 0 100 feet

Tree
Tower Structure
Option 1: Overhead Transmission Line
Option 2: Underground Transmission Line
Survey Area

Silicon Valley Power
NRS to KRS
115 kV Transmission Line

Tree Survey Results

Sources: Aspen, 2024; Esri, 2024; NearMap, 2024.

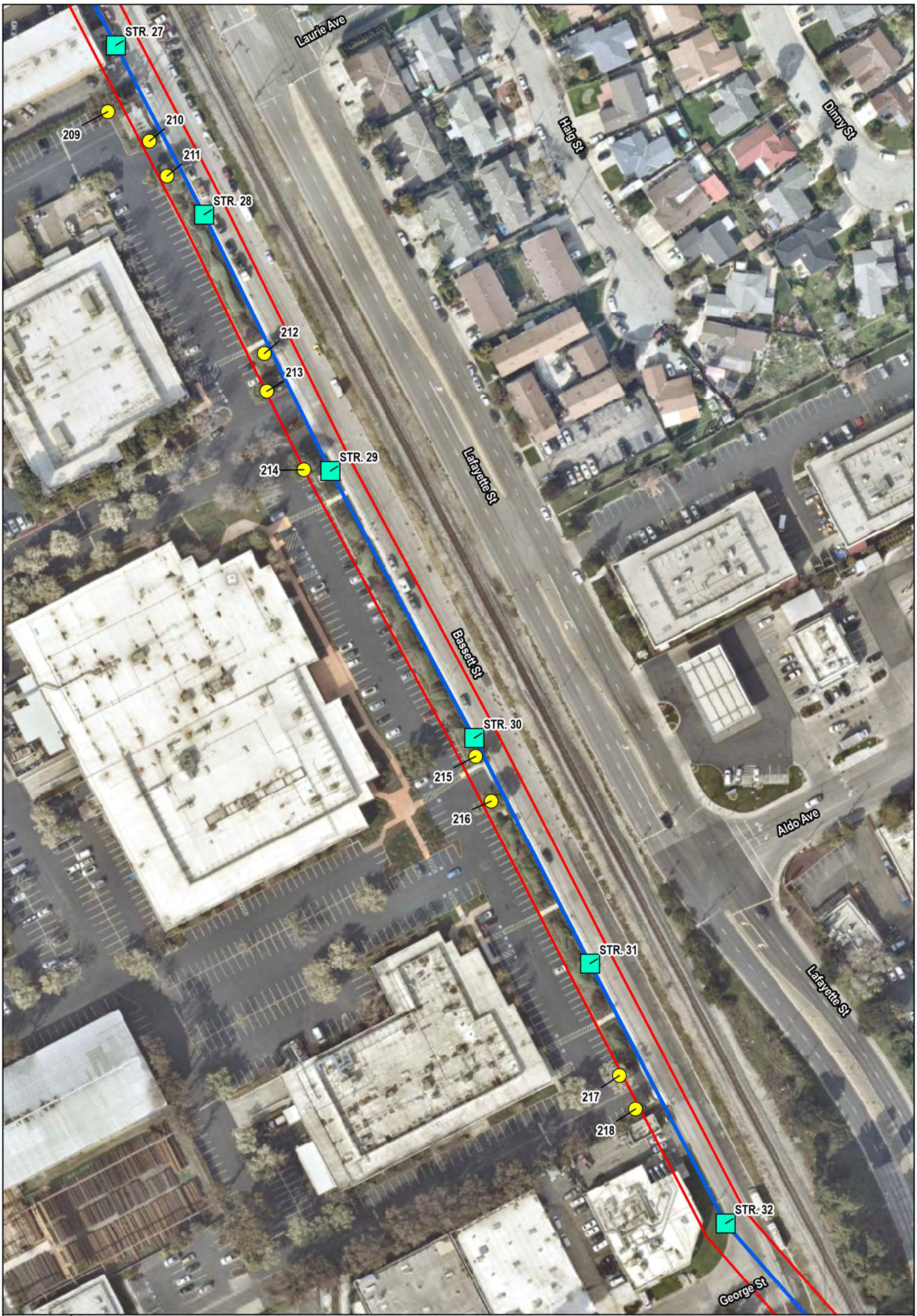

Scale: 1:1,200
1 inch = 100 feet
100 0 100 feet

Tree
Tower Structure
Option 1: Overhead Transmission Line
Option 2: Underground Transmission Line
Survey Area

Silicon Valley Power
NRS to KRS
115 kV Transmission Line

Tree Survey Results

Sources: Aspen, 2024; Esri, 2024; NearMap, 2024.

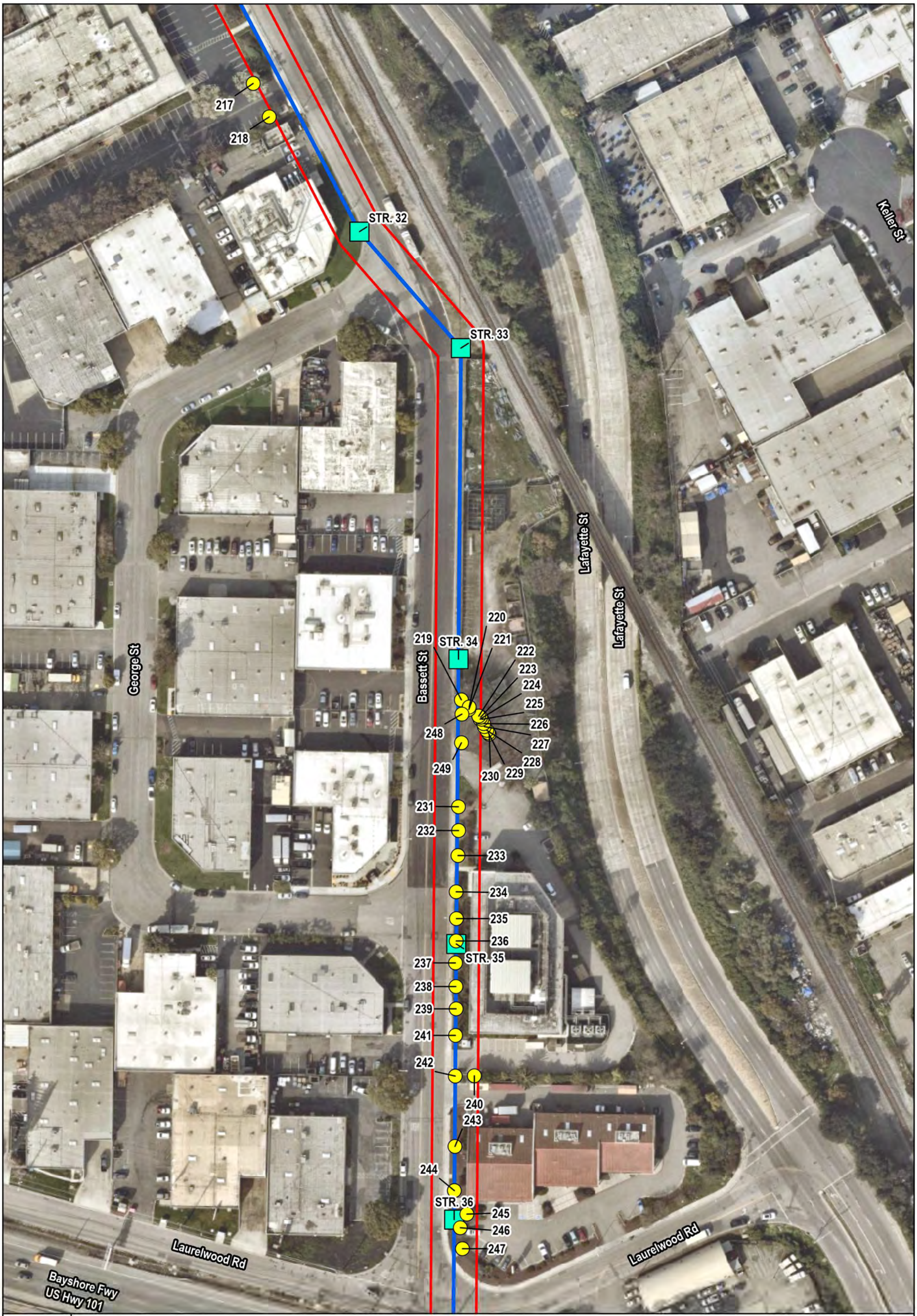

Scale: 1:1,200
1 inch = 100 feet
100 0 100 feet

Tree
Tower Structure
Option 1: Overhead Transmission Line
Option 2: Underground Transmission Line
Survey Area

Silicon Valley Power
NRS to KRS
115 kV Transmission Line

Tree Survey Results

Sources: Aspen, 2024; Esri, 2024; NearMap, 2024.

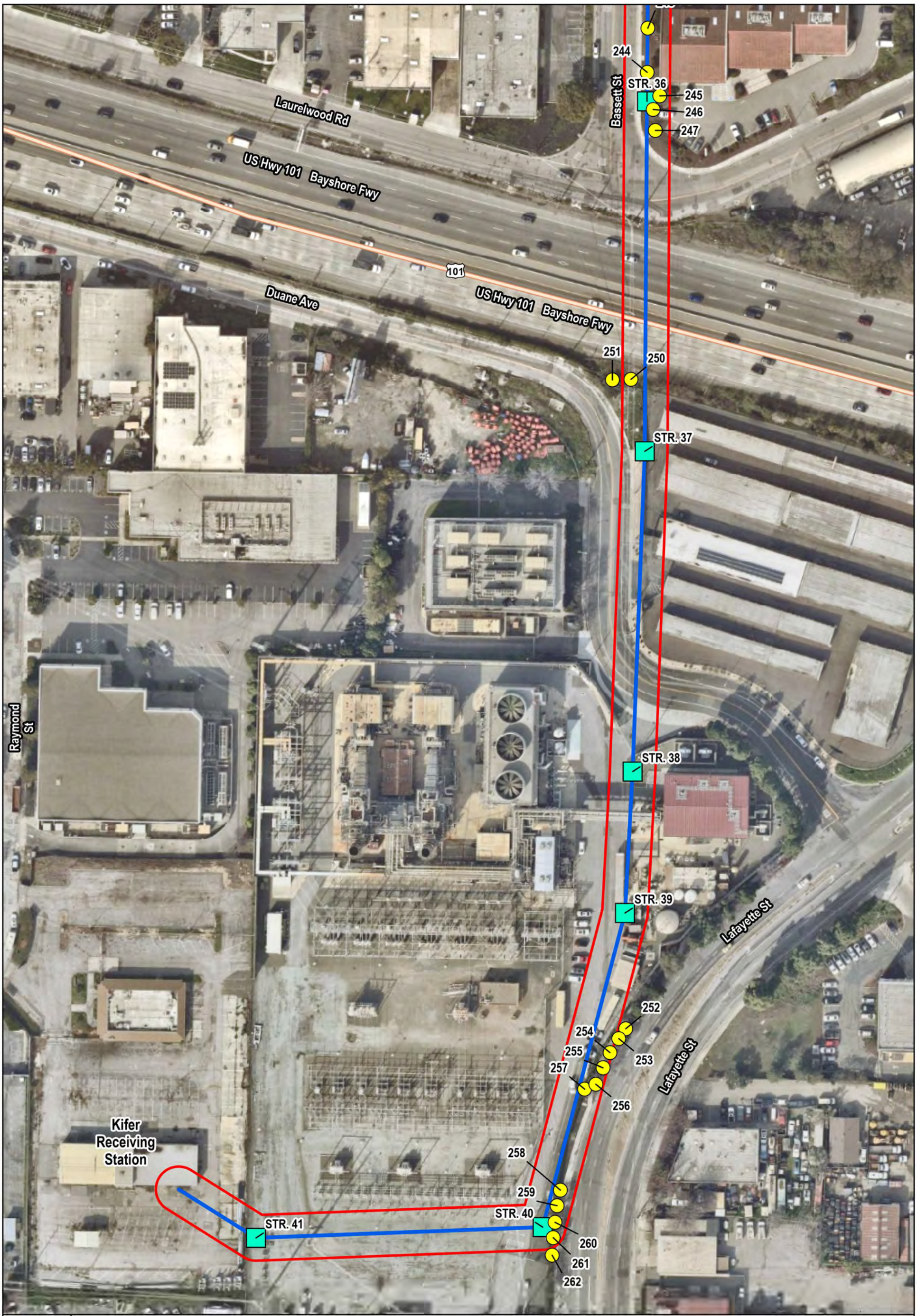

Scale: 1:1,200
1 inch = 100 feet
100 0 100 feet

Tree
Tower Structure
Option 1: Overhead Transmission Line
Option 2: Underground Transmission Line
Survey Area

Silicon Valley Power
NRS to KRS
115 kV Transmission Line

Tree Survey Results

Sources: Aspen, 2024; Esri, 2024; NearMap, 2024.

Appendix C: Tree Protection "City of Santa Clara Arborist Notes"

CITY OF SANTA CLARA
ARBORIST NOTES

I. GENERAL

1. No cutting of any part of city trees, including roots, shall be done without securing approval and direct supervision from the city arborist or arborist employed by city (408-615-3080).

2. No cutting of any part of private trees, including roots, shall be done without direct supervision of an international society of arboriculture (ISA) certified arborist.

3. When construction occurs within the drip line of existing trees, contractor shall pile the soil on the side away from the tree. When this is not possible, place soil on plywood, tarp, or 4"-5" thick bed of mulch. This is to help prevent cutting into the soil surface when the backhoe or tractor blade refills the trench.

4. Refill open trenches quickly within hours of excavation when they occur within the drip line of existing trees. If this is not possible and the weather is hot, dry, or windy, contractor must keep root ends moist by covering them with wet burlap. If the temperature is 80°f or greater, the burlap must be inspected every hour and re-wet as necessary to maintain a constant cool moist condition. If the temperature is below 80°, the burlap must be inspected every four hours and re-wet as necessary to maintain a constant cool moist condition. Small roots can dry out and die in 10-15 minutes. Larger roots can succumb in an hour or less under unfavorable weather conditions.

5. When roots 2" or larger are required to be cut, shovel by hand near the roots and prune the roots with an industry-approved pruning tool. Roots that are accidentally broken should be pruned two inches from the damaged end. Crushed or torn roots are more likely to allow decay to begin. Sharply cut roots produce a flush of new roots helping the tree to recover from its injury.

6. Contractor shall notify the city arborist or arborist employed by city 72 hours in advance of any work requiring digging around or within the drip line of existing trees.

7. A clear system of flagging must be provided around trees within 20' of the proposed grading. Contractor shall secure approval of such system from the city arborist or arborist employed by city.

8. Materials, equipment, temporary buildings, fuels, paints and other construction items shall not be placed within the drip line of existing trees.

9. Fence all trees to be retained to completely enclose the tree protection zone prior to demolition, grubbing or grading. Fencing shall be placed at the drip line of existing trees or, if possible, 1.5 times the radius of the drip line out from the trunk of the tree. A warning sign shall be prominently displayed on each fence. The sign shall be a minimum of 8.5"x11" and clearly state "**warning – tree protection zone this fence shall not be removed without approval from the city arborist/project arborist**". Fences shall be 6-foot tall chain link or

   equivalent, as approved by the city arborist or arborist employed by city. Fences shall remain until all grading and construction work is completed. In addition, wrap all trees with straw waddle up to the first main branch, and then wrap snow fencing around the waddle on all trees in the construction zone to protect them from bark damage caused by the work.

10. No trenching shall be done within the drip line of existing trees without the approval of the city arborist or arborist employed by city. Open trenching in the root zone of a public tree is prohibited except in cases where the trenching falls outside the drip line of the tree involved. Exceptions may be allowed if, in the opinion of the city arborist or arborist employed by city, the impact of trenching on the tree will be negligible.

11. Any cutting of existing roots of city trees shall be done with approved light equipment under the direct supervision of the city arborist or arborist employed by city. Any cutting of existing roots of private trees shall be done with approved equipment under the direct supervision of an ISA certified arborist.

12. Grading should not create drainage problems for trees by channeling water into them, or creating sunken areas.

13. All grading within the drip line of city trees shall be done with approved light equipment under the direct supervision of the city arborist or arborist employed by city. All grading within the drip line of private trees shall be done with approved equipment under the direct supervision of an ISA certified arborist. The original grade at the base of existing trees shall not be modified. If a grade increase is necessary, dry wells should be used.

14. When trenching is allowed, the contractor must first cut roots with a vermeer root cutter prior to any trenching to avoid tugging or pulling of roots.

15. Trees that are determined to be removed by the city arborist or arborist employed by city due to an unforeseen circumstance during construction shall be replaced by the

contractor. The city arborist or arborist employed by city shall determine the replacement specie, size, quantity, and spacing.

16. Place 4”-5” thick mulch around all existing trees (out to their drip line) that are to be retained prior to any construction. This will help maintain moisture under the tree within the fencing area.

17. Bore pits are not allowed within the drip line of any tree.

II. BORING

Where there is insufficient space to bypass the drip line by trenching adjacent to all existing trees in excess of 5” DBH, the installation must be made by boring. The beginning and ending distance of the bore from the face of the tree in any direction is determined by the diameter of the tree as specified by the accompanying table:

When the tree diameter at 4½ feet is:	Trenching will be replaced by boring at this minimum distance from the face of the tree in any direction:
0-2 inches	1 foot
3-4 inches	2 feet
6-9 inches	5 feet
10-14 inches	10 feet
15-19 inches	12 feet
over 19 inches	15 feet

Tree diameter	(minimum) depth of bore
9 inches or less	2.5 feet
10-14 inches	3.0 feet
15-19 inches	3.5 feet
20 inches or more	4.0 feet

III. TREE PROTECTION

1. Contractor shall tag and identify existing trees which are to remain within the project limits and on the public right-of-way prior to start of work. Protect all tagged trees at all times from damage by the work. Treatment of all minor damage to tagged trees shall be performed by an ISA certified arborist or other personnel approved by the city arborist or arborist employed by city. If a tagged tree is permanently

disfigured or killed as a result of the work, contractor shall remove the tree, including its roots, from the site and replace each removed tree with an equal-sized tree. If such replacement is not possible, the contractor shall reimburse to the tree owner the amount listed in the table below. The city arborist or arborist employed by city shall be the sole judge of the condition of any tree. Contractor shall provide regular watering of existing landscaping within the construction area through the construction period.

2. Contractor shall pay the tree owner the value of existing trees to remain that died or were damaged because of the contractor's failure to provide adequate protection and maintenance. The payment amount shall be in accordance with the following schedule of values, using "tree caliper" method established in the most recent issue of the "guide for establishing values of trees and other plants", prepared by the council of tree and landscape architects.

7 inches	$ 2,400
8 inches	$ 3,400
9 inches	$ 4,400
10 inches	$ 5,200
11 inches	$ 6,200
12 inches	$ 7,200
13 inches	$ 8,200
14 inches	$ 9,200
15 inches	$ 10,000
16 inches	$ 11,000
17 inches	$ 12,000
18 inches and over: Add for each caliper inch	$ 1,200

Appendix E

Biological Resources

Appendix E. Known and Potential Occurrences of Special-Status Species within the Project Area

Species	Status	Habitat	Occurrence in Study Area
Plants			
alkali milk-vetch *Astragalus tener* var. *tener*	1B.2, S1	Alkaline flats, vernally moist meadows, vernal pools	**Not likely to occur.** The proposed Project area is developed/disturbed. No suitable habitat to support this species.
brittlescale *Atriplex depressa*	1B.2, S2	Alkaline or clay soils in playas, vernal pools, vernally moist meadows, chenopod scrub, valley and foothill grassland	**Not likely to occur.** The proposed Project area is developed/disturbed. No suitable habitat to support this species.
lesser saltscale *Atriplex minuscula*	1B.1, S2	Sandy, alkaline soils in playas, chenopod scrub, valley and foothill grassland	**Not likely to occur.** The proposed Project area is developed/disturbed. No suitable habitat to support this species.
Congdon's tarplant *Centromadia parryi* ssp. *congdonii*	1B.1, S2	Terraces, swales in floodplains, and disturbed sites in valley and foothill grassland communities, and disturbed sites containing alkaline soils, sometimes heavy white clay. Occurs usually in wetlands, occasionally in non-wetlands.	**Not likely to occur.** The proposed Project area is developed/disturbed. No suitable habitat to support this species.
Point Reyes salty bird's-beak *Chloropyron maritimum* ssp. *palustre*	1B.2, S2	Coastal salt marsh	**Not likely to occur.** The proposed Project area is developed/disturbed. No suitable habitat to support this species.
robust spineflower *Chorizanthe robusta* var. robusta	FE, 1B.1, S1	Sand or gravel in coastal dunes, coastal scrub, maritime chaparral, and openings in cismontane woodlands	**Not likely to occur.** The proposed Project area is developed/disturbed. No suitable habitat to support this species. One 1882 historic CNDDB record, possibly extirpated, generally mapped to the San Jose area overlaps the Project area.
Hoover's button-celery *Eryngium aristulatum* var. *hooveri*	1B.1, S1	Vernal pools and seasonal wetlands, occasionally alkaline	**Not likely to occur.** The proposed Project area is developed/disturbed. No suitable habitat to support this species. One 1902 historic CNDDB record, possibly extirpated, generally mapped to the Santa Clara/North San Jose area overlaps the Project area.
San Joaquin spearscale *Extriplex joaquinana*	1B.2, S2	Alkaline soils in playas, vernally moist meadows, chenopod scrub, valley and foothill grassland	**Not likely to occur.** The proposed Project area is developed/disturbed. No suitable habitat to support this species.
Contra Costa goldfields *Lasthenia conjugens*	FE, 1B.1, S1	Vernal pools, wet meadows, alkaline playas	**Not likely to occur.** The proposed Project area is developed/disturbed. No suitable habitat to support this species.

Species	Status	Habitat	Occurrence in Study Area
Hall's bush-mallow *Malacothamnus hallii*	1B.2, S2	Early-recovering post-burn woody vegetation, edges of openings in coastal scrub and chaparral	**Not likely to occur.** The proposed Project area is developed/disturbed. No suitable habitat to support this species.
prostrate vernal pool navarretia *Navarretia prostrata*	1B.2, S2	Alkaline floodplains, vernal pools	**Not likely to occur.** The proposed Project area is developed/disturbed. No suitable habitat to support this species.
hairless popcornflower *Plagiobothrys glaber*	1A, SX	Wet, saline, sometimes alkaline soils in valleys, coastal marshes. Presumed extinct	**Not likely to occur.** The proposed Project area is developed/disturbed. No suitable habitat to support this species.
California alkali grass *Puccinellia simplex*	1B.2, S2	Saline flats, mineral springs	**Not likely to occur.** The proposed Project area is developed/disturbed. No suitable habitat to support this species.
California seablite *Suaeda californica*	FE, 1B.1, S1	Margins of coastal salt marshes	**Not likely to occur.** The proposed Project area is developed/disturbed. No suitable habitat to support this species.
saline clover *Trifolium hydrophilum*	1B.2, S2	Salt marshes, open areas in alkaline soils	**Not likely to occur.** The proposed Project area is developed/disturbed. No suitable habitat to support this species.
Invertebrates			
obscure bumble bee *Bombus caliginosus*	S1S2	Grassy coastal prairies and Coast Range meadows in humid and foggy areas. Requires floral resources, undisturbed nest sites, and overwintering sites.	**Low (minimal).** Study Area within current species range. Minimal potential to occur in or adjacent to proposed Project area at the following locations due to presence of limited marginal habitat: utility right-of-way southeast adjacent to the NRS at proposed structures 1, 2, and 3, landscaped interchange at proposed structure 18, and ruderal road shoulder at proposed structure 19. Marginal habitat at these locations consists of ruderal land cover containing primarily grasses and other herbaceous vegetation; Google Earth aerial and street view imagery suggests these areas are managed through periodic mowing and/or discing, and other disturbances. Study Area contains minimal floral resources dispersed amongst various urban landscaped areas. One historic 1954 CNDDB occurrence presumed extant generally mapped to San Jose overlaps Study Area with a 5-mile accuracy; no iNaturalist observations; multiple Bumble Bee Watch potential species sightings, nearest located along the Guadalupe River Trail ~0.9 miles ENE of proposed structure 18.

Species	Status	Habitat	Occurrence in Study Area
Crotch's bumble bee *Bombus crotchii*	SC, S1S2	Open grasslands and scrub. Requires floral resources, undisturbed nest sites, and overwintering sites.	**Low (minimal).** Study Area within current species range. Minimal potential to occur in or adjacent to proposed Project area at the following locations due to presence of limited marginal habitat: utility right-of-way southeast adjacent to the NRS at proposed structures 1, 2, and 3, landscaped interchange at proposed structure 18, and ruderal road shoulder at proposed structure 19. Marginal habitat at these locations consists of ruderal land cover containing primarily grasses and other herbaceous vegetation; Google Earth aerial and street view imagery suggests these areas are managed through periodic mowing and/or discing, and other disturbances. Study Area contains minimal floral resources dispersed amongst various urban landscaped areas. One historic 1903 CNDDB occurrence presumed extant generally mapped to San Jose overlaps Study Area with a 5-mile accuracy; two recent iNaturalist observations within 5 miles, nearest ~2 miles NNW of NRS; one recent Bumble Bee Watch sighting north of downtown San Jose ~3.7 miles SE of KRS.
western bumble bee *Bombus occidentalis*	SC, S1S2	Generalist forager in a wide range of flower-rich habitats. Requires floral resources, undisturbed nest sites, and overwintering sites.	**Low (minimal).** Study Area within historic species range. Minimal potential to occur in or adjacent to proposed Project area at the following locations due to presence of limited marginal habitat: utility right-of-way southeast adjacent to the NRS at proposed structures 1, 2, and 3, landscaped interchange at proposed structure 18, and ruderal road shoulder at proposed structure 19. Marginal habitat at these locations consists of ruderal land cover containing primarily grasses and other herbaceous vegetation; Google Earth aerial and street view imagery suggests these areas are managed through periodic mowing and/or discing, and other disturbances. Study Area contains minimal floral resources dispersed amongst various urban landscaped areas. One historic 1979 CNDDB occurrence presumed extant generally mapped to San Jose overlaps Study Area with a 5-mile accuracy; no iNaturalist observations or Bumble Bee Watch sightings.
Conservancy fairy shrimp *Branchinecta conservatio*	FE, S2	Large, turbid freshwater vernal pools called playa pools	**Not likely to occur.** The proposed Project area is developed/disturbed. No suitable habitat to support this species.

Species	Status	Habitat	Occurrence in Study Area
monarch - California overwintering population *Danaus plexippus plexippus* pop. 1	FC, S2	Occur in fields, roadside, open, and wet areas or urban gardens where milkweed and flowering plants are present. Adult monarchs feed on the nectar of many flowers during breeding and migration, but they can only lay eggs on milkweed plants. Monarchs living west of the Rocky Mountain range in North America primarily overwinter in California at sites along the Pacific Coast, roosting in eucalyptus, Monterey pines, and Monterey cypress trees.	**Not likely to occur (overwintering, breeding).** Study Area outside the over-wintering range of species; lacks over-wintering habitat. Study Area lacks suitable habitat that supports milkweed (*Asclepias* sp.) required for breeding. **Low (migration foraging).** Study Area is within urban area containing various dispersed floral resources in landscaped areas that could support foraging monarchs migrating through the area. No CNDDB records within 5 miles; numerous iNaturalist observations, nearest is 2023 observation across San Tomas Aquino Creek from the NRS.
western ridged mussel *Gonidea angulata*	S2	More often in streams than lakes and prefers constant water flow and well-oxygenated stable substrates in areas of low gradient	**Not likely to occur.** The proposed Project area is developed/disturbed. No suitable habitat to support this species. The Project will not impact or cross any streams or lakes that could support this species. One 1908 historic CNDDB record, possibly extirpated, mapped to San Tomas Aquino Creek near the Project area. One undated CNDDB record, possibly extirpated, generally mapped to the San Jose area overlaps the Project area.
Vernal pool tadpole shrimp *Lepidurus packardi*	FE, S3	Ephemeral freshwater habitats, including alkaline pools, clay flats, vernal lakes, vernal pools, vernal swales and other seasonal wetlands	**Not likely to occur.** The proposed Project area is developed/disturbed. No suitable habitat to support this species.
mimic tryonia / California brackishwater snail *Tryonia imitator*	S2	Aquatic gastropod, occurs in coastal lagoons, estuaries, sloughs, and marshes.	**Not likely to occur.** The proposed Project area is developed/disturbed. No suitable habitat to support this species. The Project will not impact or cross any lagoon, estuary, slough, or marsh habitat that could support this species.
Fish			
longfin smelt *Spirinchus thaleichthys*	FC, ST, S1	Pelagic fish (occurring mainly in open water habitats) that occur in bays and estuaries	**Not likely to occur.** The proposed Project area is developed/disturbed. No suitable habitat to support this species. The Project will not impact or cross any marine habitat that could support this species.
white sturgeon *Acipenser transmontanus*	SSC, S2	Anadromouos fish, occurs in estuaries and large rivers, migrates to freshwater to spawn, and travels through the ocean between river systems.	**Not likely to occur.** The proposed Project area is developed/disturbed. No suitable habitat to support this species. The Project will not impact or cross any river or marine habitat that could support this species.

Species	Status	Habitat	Occurrence in Study Area
coho salmon - central California coast ESU *Oncorhynchus kisutch* pop. 4	FE, SE, S2	Depending on life stage, can be found in freshwater rivers, streams, estuaries, and marine environments	**Not likely to occur.** The proposed Project area is developed/disturbed. No suitable habitat to support this species. The Project will not impact or cross any river, stream, or marine habitat that could support this species.
steelhead - central California coast DPS *Oncorhynchus mykiss irideus* pop. 8	FT, SSC, S3	Depending on life stage, can be found in freshwater rivers, streams, estuaries, and marine environments	**Not likely to occur.** The proposed Project area is developed/disturbed. No suitable habitat to support this species. The Project will not impact or cross any river, stream, or marine habitat that could support this species.
Amphibians			
California tiger salamander - central California DPS *Ambystoma californiense* pop. 1	FT, ST, WL, S3	Vernal pools or other seasonal water sources for breeding. Upland grasslands with underground refuges (often ground squirrel burrows)	**Not likely to occur.** The proposed Project area is developed/disturbed. No suitable habitat to support this species. The Project will not impact or cross any vernal pool or other seasonal wetlands that could support breeding habitat for this species. One 1895 historic CNDDB record, extirpated, generally mapped to the San Jose area overlaps the Project area.
California giant salamander *Dicamptodon ensatus*	SSC, S2S3	Wet coastal forests in or near clear, cold permanent and semi-permanent streams and seepages	**Not likely to occur.** The proposed Project area is developed/disturbed. No suitable habitat to support this species. The Project will not impact or cross any river or seep habitat that could support this species.
foothill yellow-legged frog - central coast DPS *Rana boylii* pop. 4	FT, SE, S2	Rocky streams in a variety of habitats, including valley-foothill hardwood, valley-foothill hardwood-conifer, valley-foothill riparian, ponderosa pine, mixed conifer, coastal scrub, mixed chaparral, and wet meadow types.	**Not likely to occur.** The proposed Project area is developed/disturbed. No suitable habitat to support this species. The Project will not impact or cross any river or stream habitat that could support this species.
California red-legged frog *Rana draytonii*	FT, SSC, S2S3	Quiet pools of streams, marshes and ponds, prefers shorelines with extensive vegetation	**Not likely to occur.** The proposed Project area is developed/disturbed. No suitable habitat to support this species. The Project will not impact or cross any stream, marsh, or pond habitat that could support this species.
red-bellied newt *Taricha rivularis*	SSC, S2	Streams and rivers in coastal woodlands and redwood forest	**Not likely to occur.** The proposed Project area is developed/disturbed. No suitable habitat to support this species. The Project will not impact or cross any river or stream habitat that could support this species.

Species	Status	Habitat	Occurrence in Study Area
Coast Range newt *Taricha torosa*	SSC, S4	Terrestrial habitats, primarily cismontane woodlands, coastal scrub, and mixed chaparral; also known from annual grassland and mixed conifer types	**Not likely to occur.** The proposed Project area is developed/disturbed. No suitable habitat to support this species. The Project will not impact or cross any aquatic features that could support breeding habitat for this this species.
Reptiles			
western pond turtle *Actinemys = Emys marmorata*	FC, SSC, S3	Ponds, marshes, rivers, streams and irrigation ditches, usually with aquatic vegetation. Need basking sites and upland habitat up to ~0.3 miles (1,640 feet) from water for egg laying.	**Low (minimal).** The project will not impact or cross over aquatic habitat that may support this species. Marginal upland habitat occurs adjacent to San Tomas Aquino Creek, which is at the edge or just outside the 500-ft Study Area buffer near the NRS work area. Marginal upland habitat at this location consists of ruderal land cover containing primarily grasses and other herbaceous vegetation; Google Earth aerial and street view imagery suggests these areas are managed through periodic mowing and/or discing, and other disturbances. Soils at this location may be too compact for western pond turtle to excavate a nest or over-wintering burrow, but individuals may attempt to migrate into the area from the adjacent creek. Chainlink fencing present at the far west side of the utility right-of-way may present a barrier to the species moving into this area; unknown if burrows or other breaks in this fence exist. 13 CNDDB records within 5 miles; numerous iNaturalist observations; nearest is 2017 CNDDB record in San Tomas Aquino Creek ~0.75 miles NW of the NRS.
Northern California legless lizard *Anniella pulchra*	SSC, S2S3	Moist warm loose soil with plant cover. Sparsely vegetated areas of beach dunes, chaparral, pine-oak woodlands, desert scrub, sandy washes, and stream terraces with sycamores, cottonwoods, or oaks.	**Not likely to occur.** The proposed Project area is developed/disturbed. No suitable habitat to support this species. One 1949 historic CNDDB record, possibly extirpated, mapped generally to the San Jose area overlaps the Project area.
Alameda whipsnake *Masticophis lateralis euryxanthus*	FT, ST, S2	Chaparral and scrub habitats. Will also use adjacent grassland, oak savanna and woodland habitats. Mostly south-facing slopes and ravines, with rock outcrops, deep crevices or abundant rodent burrows.	**Not likely to occur.** The proposed Project area is developed/disturbed. No suitable habitat to support this species.
coast horned lizard *Phrynosoma blainvillii*	SSC, S4	Requires loose, fine soils with a high sand fraction, abundance of native ants or other insects, open areas with limited overstory for basking and areas with low, dense shrubs for refuge	**Not likely to occur.** The proposed Project area is developed/disturbed. No suitable habitat to support this species.

Species	Status	Habitat	Occurrence in Study Area
Birds			
Cooper's hawk *Accipiter cooperii*	WL, S4	Most common in forests and woodland habitats but can be found nesting and hunting in suburban parks and neighborhoods; will nest in dense patches of large pines, oaks, or Douglas-firs. Breeding resident throughout most of the wooded portion of the state.	**High potential to occur (nesting, foraging).** The Study Area is developed/disturbed but provides suitable habitat that could support this urban-adapted species. No CNDDB records within 5 miles; numerous eBird and iNaturalist observation within 5 miles, concentrated along the Guadalupe River, and in residential neighborhoods south of the Southern Pacific Railroad line, nearest is 2024 eBird observation at the Oracle Santa Clara Campus adjacent the Project.
tricolored blackbird *Agelaius tricolor*	ST, SSC, S2	Highly colonial species, most numerous in Central Valley and vicinity. Requires open water, protected nesting substrate, and foraging area with insect prey within a few kilometers of the colony.	**Not likely to occur (nesting, foraging).** The proposed Project area is developed/disturbed. No suitable habitat to support this species.
golden eagle *Aquila chrysaetos*	FP, WL, S3	Open and semi open country featuring native vegetation across most of the Northern Hemisphere. They avoid developed areas and uninterrupted stretches of forest.	**Not likely to occur (nesting, foraging).** The proposed Project area is developed/disturbed. No suitable habitat to support this species.
burrowing owl *Athene cunicularia*	SSC, BCC, S2	Open, dry annual or perennial grasslands, deserts and scrublands characterized by low growing vegetation. Subterranean nester, dependent on burrowing mammals, most notably, the California ground squirrel.	**Moderate (nesting, foraging).** Minimal potential to occur in or adjacent to proposed Project area at the following locations due to presence of marginal habitat: utility right-of-way southeast adjacent to the NRS and within or adjacent to work areas for proposed structures 2, 3, 18, and 19. Marginal habitat at these locations consists of ruderal land cover containing primarily grasses and other herbaceous vegetation; Google Earth aerial and street view imagery suggests these areas are managed through periodic mowing. 32 CNDDB records and numerous eBird and iNaturalist observations within 5 miles; one 2014 CNDDB record overlaps the NRS and northern-most part of the proposed Project alignment, however, almost entire occurrence area fully developed. Potentially extant populations from 2004 CNDDB record located at the Santa Clara Golf and Tennis Club located ~0.50 mile north of the NRS; and 2009 CNDDB record at the San Jose International Airport located ~0.50 miles east of the KRS. One extirpated 1999 CNDDB record located along Lafayette Street north of the Palm Substation.

Species	Status	Habitat	Occurrence in Study Area
Swainson's hawk *Buteo swainsoni*	ST, S4	Breeds in grasslands with scattered trees, juniper-sage flats, riparian areas, savannahs, and agricultural or ranch lands with groves or lines of trees. Requires adjacent suitable foraging areas such as grasslands, or alfalfa or grain fields supporting rodent populations.	**Not likely to occur (nesting).** Although the Study Area is within the historic breeding range of the species and contains some marginal nesting habitat at the Oracle Santa Clara campus, CDFW data (CNDDB, 2016 Status Review) show no evidence of current nesting efforts in the greater San Jose region. Nearest known breeding locations are between Gilroy, Santa Clara County, and Hollister, San Benito County, ~35 miles SE of the Study Area. **Low (minimal; foraging).** Minimal potential to occur in or adjacent to proposed Project area at the following locations due to presence of marginal habitat: utility right-of-way southeast adjacent to the NRS and within or adjacent to work areas for proposed structures 2, 3, 18, and 19. Marginal habitat at these locations consists of ruderal land cover containing primarily grasses and other herbaceous vegetation; Google Earth aerial and street view imagery suggests these areas are managed through periodic mowing. One likely extirpated historic (1889) CNDDB record of a nest located ~0.75 miles S of the KRS; one iNaturalist and few eBird observations during migration located within 5 miles.
western snowy plover *Charadrius nivosus nivosus*	FT, SCC, S3	Coastal beaches, sand spits, dune-back beaches, sparsely-vegetated dunes, beaches at creek and river mouths, and salt pans at lagoons and estuaries	**Not likely to occur (nesting, foraging).** The proposed Project area is developed/disturbed. No suitable habitat to support this species.
Northern harrier *Circus hudsonius*	SSC, BCC, S3	Prefer open country, grasslands, steppes, wetlands, meadows, agriculture fields; roost and nest on ground in shrubby vegetation often at edge of marshes. Permanent resident of coastal areas and northeastern plateau.	**Not likely to occur (nesting, foraging).** The proposed Project area is developed/disturbed. No suitable habitat to support this species.
western yellow-billed cuckoo *Coccyzus americanus occidentalis*	FT, SE, S1	Riparian habitat, cottonwood and willow trees.	**Not likely to occur (nesting, foraging).** The project area is developed/disturbed. No suitable habitat to support this species.
yellow rail *Coturnicops noveboracensis*	SSC, BCC, S2	Shallow marshes, and wet meadows; in winter, drier fresh-water and brackish marshes, as well as dense, deep grass, and rice fields.	**Not likely to occur (nesting, foraging).** The proposed Project area is developed/disturbed. No suitable habitat to support this species. One 1895 historic CNDDB record, presumed extant, mapped generally to the San Jose area overlaps the Project area.

Species	Status	Habitat	Occurrence in Study Area
white-tailed kite *Elanus leucurus*	FP, S3S4	Rolling foothills and valley margins with scattered oaks and river bottomlands or marshes next to deciduous woodland. Open grasslands, meadows, or marshes for foraging close to isolated, dense-topped trees for nesting and perching.	**Low (minimal; nesting, foraging).** Minimal potential to occur within or adjacent to the proposed Project area. Limited suitable nesting habitat present within the Study Area, particularly along San Tomas Aquino Creek to the west of the NRS, Lick Mill Park near proposed structure 4, the Oracle Santa Clara Campus adjacent to the Palm Substation and proposed structures 14 through 17, and the landscaped interchange adjacent to proposed structure 18. Limited marginal foraging habitat present at utility right-of-way southeast adjacent to the NRS and within or adjacent to work areas for proposed structures 2, 3, 18, and 19. Two CNDDB records and numerous eBird and iNaturalist observations; nearest is a 2022 eBird observation located at the Oracle Santa Clara campus adjacent to the Palm Substation and proposed structures 14 through 17.
American peregrine falcon *Falco peregrinus anatum*	FD, SD, S3S4	Nests and roosts on protected ledges of high cliffs, buildings, and bridges, usually adjacent to lakes, rivers, or marshes that support abundant avian prey.	**Not likely to occur (nesting).** The Study Area lacks suitable nesting habitat to support this species. **Moderate (foraging).** The Study Area is developed/disturbed but provides suitable habitat that supports urban-adapted bird species that American peregrine falcon could prey upon. One CNDDB record located within the San Jose West quadrangle; few iNaturalist and multiple eBird observations within 5 miles, concentrated along the bay.
saltmarsh common yellowthroat *Geothlypis trichas sinuosa*	SSC, BCC, S3	Resident of the San Francisco Bay region, in fresh and salt water marshes. Requires thick, continuous cover down to water surface for foraging; tall grasses, tule patches, willows for nesting.	**Not likely to occur (nesting, foraging).** The proposed Project area is developed/disturbed. No suitable habitat to support this species.
California condor *Gymnogyps californianus*	FE, SE, FP, S2	Nests in caves, crevices, behind rock slabs, or on large ledges on high sandstone cliffs; requires vast expanses of open savannah, grasslands, and foothill chaparral with cliffs, large trees and snags for roosting.	**Not likely to occur (nesting, foraging).** The proposed Project area is developed/disturbed. No suitable habitat to support this species.

Species	Status	Habitat	Occurrence in Study Area
bald eagle *Haliaeetus leucocephalus*	FD, SE, FP, S3	Habitat includes rivers and lakes with adjacent woodlands. Large bodies of water are always associated with breeding populations. Nests on large trees in the vicinity of large lakes, reservoirs, and rivers. Wintering birds are most often found near large concentrations of waterfowl or fish.	**Not likely to occur (nesting, foraging).** The proposed Project area is developed/disturbed. No suitable habitat to support this species.
California black rail *Laterallus jamaicensis coturniculus*	ST, FP, S2	Saltwater marshes and shallow freshwater marshes, wet meadows, and flooded grassy vegetation.	**Not likely to occur (nesting, foraging).** The proposed Project area is developed/disturbed. No suitable habitat to support this species.
Alameda song sparrow *Melospiza melodia pusillula*	SSC, BCC, S2	Resident of salt marshes bordering south arm of San Francisco Bay. Inhabits Salicornia marshes; nests low in Grindelia bushes (high enough to escape high tides) and in Salicornia.	**Not likely to occur (nesting, foraging).** The proposed Project area is developed/disturbed. No suitable habitat to support this species. One 1947 historic CNDDB record, presumed extant, mapped generally to the Santa Clara Golf and Tennis Club and Guadalupe River area north of the Project area.
American white pelican *Pelacanus erythrorhynchos*	SCC, BCC, S1S2	Large freshwater and saltwater lakes, usually on small islands or remote dikes. Nest-sites are flat or gently sloping, lacking shrubs or other obstructions, free of human disturbance, and usually with loose earth suitable for nest-mounds.	**Not likely to occur (nesting, foraging).** The proposed Project area is developed/disturbed. No suitable habitat to support this species.
California Ridgway's rail *Rallus obsoletus obsoletus*	FE, SE, FP, S2	Saltwater marshes and freshwater marshes.	**Not likely to occur (nesting, foraging).** The proposed Project area is developed/disturbed. No suitable habitat to support this species.
yellow warbler *Setophaga petechia*	SSC, S3	Primarily in willows, riparian thickets, and riparian trees such as cottonwood, sycamore, ash, and alder, especially near water, but also xeric montane shrub fields and shrubby understory of mixed-conifer forest.	**Not likely to occur (nesting, foraging).** The proposed Project area is developed/disturbed. No suitable habitat to support this species.
California least tern *Sternula antillarum browni*	FE, SE, FP, S2	Colonies along marine and estuarine shores and near abandoned salt ponds. Feeds in nearby shallow, estuarine waters.	**Not likely to occur (nesting, foraging).** The proposed Project area is developed/disturbed. No suitable habitat to support this species.

Species	Status	Habitat	Occurrence in Study Area
Mammals			
Townsend's big-eared bat *Corynorhinus townsendii*	SSC, S2	Habitat associations include conifer forests, deserts, grasslands, riparian, coastal habitats, active agriculture; most commonly found in mesic sites. Roosts on walls and ceilings of caves and mines, also buildings, bridges, rock crevices, and hollow trees. Extremely sensitive to human disturbance. Forages in edge habitats along streams, adjacent to and within a variety of wooded habitats.	**Low (minimal; roosting, foraging).** The Montague Expressway overpass bridge structure between proposed structures 19 and 20 provides limited suitable roosting habitat to support this species. The Study Area provides limited suitable foraging habitat to support this species. One historic (1943) CNDDB record in the general area of San Jose ~3 miles SE of the KRS; no iNaturalist observations within 5 miles.
western red bat *Lasiurus frantzii*	SSC, S3	Typically solitary, prefers riparian. Roosts primarily in shrub and tree foliage, especially cottonwood-willow, mostly in edge habitats adjacent to streams or open fields but also orchards, sometimes urban areas. May occasionally use caves.	**Low (minimal; roosting, foraging).** The Study Area contains limited trees and shrubs suitable to support roosting for this species, particularly along San Tomas Creek to the west of the NRS, Lick Mill Park near proposed structure 4 and the Oracle Santa Clara Campus adjacent to the Palm Substation and proposed structures 14 through 17, and the landscaped interchange adjacent to proposed structure 18. Study Area contains limited suitable foraging habitat. No CNDDB records within 5 miles; one 2020 iNaturalist observation along Guadalupe River ~0.7 miles NE of the KRS.
San Francisco dusky-footed woodrat *Neotoma fuscipes annectens*	SSC, S2S3	Forest habitats of moderate canopy and moderate to dense understory. May prefer chaparral and redwood habitats. Constructs nests of shredded grass, leaves, and other material. May be limited by availability of nest building materials.	**Not likely to occur.** The proposed Project area is developed/disturbed. No suitable habitat to support this species.
salt-marsh harvest mouse *Reithrodontomys raviventris*	FE, SE, FP, S3	Salt marshes, diked and tidal wetlands, pickleweed	**Not likely to occur.** The proposed Project area is developed/disturbed. No suitable habitat to support this species.
salt-marsh wandering shrew *Sorex vagrans halicoetes*	SSC, S1	Salt marshes	**Not likely to occur.** The proposed Project area is developed/disturbed. No suitable habitat to support this species.
American badger *Taxidea taxus*	SSC, S3	Semi-fossorial mammal found most often in drier, open stages of shrubland, forest, and herbaceous habitats with friable soils and rodent prey.	**Not likely to occur.** The proposed Project area is developed/disturbed. No suitable habitat to support this species.

Species	Status	Habitat	Occurrence in Study Area
San Joaquin kit fox *Vulpes macrotis mutica*	FE, ST, S3	Resident of arid regions of the southern half of the state, living in annual grasslands or grassy open stages of vegetation dominated by scattered bush, shrubs and scrub. Dens dug in open, level areas with loose-textured, sandy and loamy soils. Dens used throughout the year.	**Not likely to occur.** The proposed Project area is developed/disturbed. No suitable habitat to support this species.

Definitions Regarding Potential Occurrence:

Present: Species (or sign) was observed in the Study Area during recent surveys, or a population has been acknowledged by CDFW, USFWS, or local experts.

High: Habitat (including soils) for the species occurs in the Study Area and a known occurrence occurs within five miles within the past 20 years; however, the species was not detected during recent surveys.

Moderate: Habitat (including soils) for the species occurs in the Study Area and a known regional record has been documented, but not within five miles of the Project site or within the past 20 years; or there is a documented occurrence within five miles of the Study Area within the past 20 years and marginal or limited habitat occurs on site; or the species' range includes the geographic area and suitable habitat exists in the Survey Area.

Low: Limited habitat for the species occurs in the Study Area and the species' range includes the geographic area, but there are no documented occurrences within five miles of the Survey Area within the past 20 years.

Not likely to occur: Species or signs not observed in the Study Area, the Study Area is outside of the species' known range, and conditions in the Study Area are not suitable for occurrence.

STATUS CODES:

FT Federally Threatened
FC Federal Candidate
SE State Endangered
SC State Candidate
SSC California Species of Special Concern
FP Fully Protected

CNPS California Native Plant Society Listing
1B Plants Rare, Threatened, or Endangered in California and elsewhere
2 Plants Rare, Threatened, or Endangered in California, but more common elsewhere
3 Plants about which we need more information – a review list
.1 Seriously threatened in California (high degree/immediacy of threat)
.2 Fairly threatened in California (moderate degree/immediacy of threat)
.3 Not very threatened in California (low degree/immediacy of threats or no current threats known)

BCC Birds of Conservation Concern: USFWS-designated migratory and non-migratory bird species (beyond those already designated as federally threatened or endangered) that represent highest conservation priorities and draw attention to species in need of conservation action.

STATE RANKING The state rank (S-rank) is assigned much the same way as the global rank, but state ranks refer to the imperilment status only within California's state boundaries.

SX Presumed Extirpated – Species is believed to be extirpated from the state. Not located despite intensive searches of historical sites and other appropriate habitat, and virtually no likelihood that it will be rediscovered.

S1 Critically Imperiled—Critically imperiled in the state because of extreme rarity (often 5 or fewer populations) or because of factor(s) such as very steep declines making it especially vulnerable to extirpation from the state.

S2 Imperiled—Imperiled in the state because of rarity due to very restricted range, very few populations (often 20 or fewer), steep declines, or other factors making it very vulnerable to extirpation from the state.

S3 Vulnerable – At moderate risk of extirpation in the state due to a fairly restricted range, relatively few populations or occurrences, recent and widespread declines, threats, or other factors.

S4 Apparently Secure – At a fairly low risk of extirpation in the state due to an extensive range and/or many populations or occurrences, but with possible cause for some concern as a result of local recent declines, threats, or other factors.

Appendix F

Scoping Report

APPENDIX F
PUBLIC SCOPING REPORT

NRS-KRS 115 kV
Transmission Line Project

Prepared for

Silicon Valley Power
City of Santa Clara

Submitted by

Aspen environmental group

July 2024

Contents

1. Overview of CEQA Scoping Process 1

1.1. Introduction 1
1.2. Summary of CEQA Scoping Process 1
1.3. Agencies, Organizations, and Persons Providing Scoping Comments 2
1.4. Scoping Report Organization 4

2. Summary of the Proposed Project 5

3. Summary of Scoping Comments 6

3.1. Form Letter Summary 6
3.1.1. Health Concerns – EMF 6
3.1.2. Increased Risk for Catastrophic Accidents and Fire Hazards 6
3.1.3. Impact on Home Insurance Costs and Property Value 7
3.1.4. Aesthetic Impact 7
3.1.5. Complexity and Inconvenience 7
3.1.6. Exploring Alternatives 8
3.1.7. Other 8

4. Summary of Future Steps in the Environmental review Process 10

List of Tables

Table 1-1. Comments Received During Public Scoping Period 2

List of Figures

Figure 4-1. Project Review and Timeline 10

List of Attachments

Attachment A Public Scoping Meeting Notices
Attachment B Scoping Meeting Presentation
Attachment C Written Scoping Comments Received During Scoping Period

Acronyms

CEQA	California Environmental Quality Act
EIR	Environmental Impact Report
EMF	Electromagnetic Fields
kV	Kilovolt

1. OVERVIEW OF CEQA SCOPING PROCESS

The environmental review of the Silicon Valley Power (SVP) NRS-KRS 115 kV Transmission Line Project (Project) is being conducted by the City of Santa Clara (City) as the lead agency under the California Environmental Quality Act (CEQA) (Public Resources Code section 21000 et seq.). The City held a 50-day public scoping period. There are no CEQA requirements for a public scoping period for an MND, however, SVP chose to conduct public scoping to provide an opportunity for the public and agencies to comment on the scope of the environmental review of the Project.

This Scoping Report documents the scoping process and summarizes the scoping comments received for the Project. Specifically, this report describes the scoping events and activities, and summarizes written comments submitted in response to the City's notice of a public scoping meeting for the Project. This report provides the issues presented in public comments that will be considered in the preparation of the Initial Study/Mitigated Negative Declaration (IS/MND). The lead agency will use the comments received during the scoping period to:

1. Identify key issues to focus the analysis in the environmental document.
2. Analyze environmental impacts of the Project and alternatives.
3. Identify ways to avoid or reduce environmental impacts.

1.1. Introduction

SVP is proposing to construct the NRS to KRS 115 kV Transmission Line Project, which would include constructing a new, 2.24 mile long overhead and/or underground 115 Kilovolt (kV) transmission line between two existing facilities, Northern Receiving Station (NRS) and Kifer Receiving Station (KRS), in the City of Santa Clara. The City has prepared an Initial Study/Mitigated Negative Declaration for the Project.

The Project would be located in Santa Clara County in a fully developed urban area and includes several existing transmission lines, including lines owned by SVP and PG&E. The proposed Project would be located in Section 27, Township 6S, Range 1W, Mount Diablo Meridian.

The NRS is located south of the intersection of Bill Walsh Way and Stars and Stripes Drive, immediately adjacent to the southeast corner of Levi's Stadium. The KRS is located approximately 0.1 miles northwest of the intersection of Lafayette Street and Central Expressway. The NRS and KRS are approximately 2 miles away from each other.

1.2. Summary of CEQA Scoping Process

The CEQA scoping process provides government agencies, Tribal agencies, organizations, and members of the public the opportunity to identify environmental issues and alternatives for consideration in the IS/MND. The scoping process and results are an initial step in the environmental review process.

There are no requirements included in the CEQA Guidelines pertaining to scoping for an IS/MND. The City modeled the scoping process required for EIRs as outlined in Section 15082 of the CEQA Guidelines (14 CCR 15000 et seq.). The City issued a notice of a public scoping meeting on April 10, 2024, that summarized the Project, stated the City's intention to prepare an Initial Study/Mitigated Negative Declaration, and requested comments from interested parties. The notice was mailed to 3,626 people, using a list compiled with GIS data for a 1,000+ foot radius around the entire Project route. Prior to the scoping meeting on April 25, 2024, SVP's project manager was notified that some residents near the project did not receive the notice. The decision was made to extend the scoping period an additional three weeks, re-send the notices, and electronically notify people as well.

The second notice was mailed out on May 7, 2024 to 3,626 addresses. The second notification also included electronic notification, which sent out notices to SVP's (8,177 subscribers) and the City's (7,552 subscribers) news blast email lists, plus social media accounts on Facebook (2,400 followers), and Nextdoor (52,860) members. Additionally, as part of the AB 52 process, two tribes on the City's tribal consultation list were contacted. Attachment A includes a copy of the notices that were sent out.

The notice was also posted on the Silicon Valley Power's webpage:

www.siliconvalleypower.com/115kv

During the comment period, the City held two virtual public scoping meetings from 5 p.m. to 7 p.m. on Thursday April 25, and Thursday May 23, 2024. Remote participation was made available through the online web-based platform, Zoom. SVP and their environmental and engineering consultants provided a presentation explaining the Project, CEQA process, the City's role throughout this process, and public participation opportunities (Attachment B).

The first meeting was attended by 8 people, and the second meeting was attended by 18 people.

The comment period began on April 8, 2024 and originally ended 30 days later, on May 8, 2024. However, the comment period was extended to conduct an expanded outreach effort. Therefore, the 50-day comment period began on April 8, 2024 and ended on May 29, 2024.

In total, 87 comment letters were received during the scoping period. Most of these comments (83 out of 87) were identical "form" letters, which include the same text in the body of the comment but are signed individually by the sender. Eleven individuals sent in more than one comment letter, and several comments were received from the same physical address, resulting in 50 comments from unique properties.

86 comments were received from residents, and one comment was received from a nearby business (see Table 1-1). No comments were received from tribes.

These letters have been included in this Scoping Report in Attachment C. The comments identified in these letters and the comments presented at the scoping meeting were considered in the drafting of this IS/MND.

1.3. Agencies, Organizations, and Persons Providing Scoping Comments

The majority of public comments received were from members of the public. Table 1-1 presents the residents and business that provided written comments during the scoping process, in chronological order. Contact information was collected from commentors, and their information was added to the mailing list to be notified about the Project in the future.

Table 1-1. Comments Received During Public Scoping Period

Commenter	Date	Commenter	Date
Organizations and Businesses			
BiCMOS/Peter Liljegren	5/28/2024		
Individuals			
Xiaoling Huang	4/14/2024	Gane Sugali	5/27/2024
Cipson Jose	5/27/2024	Preetika Tiwari	5/27/2024
Anu Alex	5/27/2024	Mehul Suresh Kumar Jain	5/27/2024
Preetika Tiwari	5/27/2024	Vishaka Sutrave	5/27/2024
Aman Sharma	5/27/2024	Mehul Suresh Kumar Jain	5/27/2024
Neelam Dabholkar	5/27/2024	Nikhil Mungre	5/27/2024

Commenter	Date	Commenter	Date
Derek Fong	5/27/2024	Punnya Ann Joy	5/29/2024
Suneet Bisht	5/27/2024	Satya Gandreddi	5/29/2024
Ruchika Sarna	5/27/2024	Satya Gandreddi	5/29/2024
Vijay Srinivasan	5/27/2024	Neethu Cherian	5/29/2024
Adnan Hemani	5/27/2024	Leonard Le	5/29/2024
Amit Chandak	5/27/2024	Diem Nguyen	5/29/2024
Saurabh Sharma	5/28/2024	Yuri Kleban	5/29/2024
Pratima Hans	5/28/2024	Niaz Khan	5/29/2024
Manali Desai	5/28/2024	Gayathri Chebrolu	5/29/2024
Dr. Vinay Iyer	5/28/2024	Anupama Swaminath	5/29/2024
Dr. Vinay Iyer	5/28/2024	Shaheen Khan	5/29/2024
Shankar Pandravada	5/28/2024	Rahul Khona	5/29/2024
Shankar Pandravada	5/28/2024	Himasree Chundi	5/29/2024
Harini Tadinada	5/28/2024	Sushil Gote	5/29/2024
Harini Tadinada	5/28/2024	Aswini Kumbavath	5/29/2024
Pankaj Sinha	5/28/2024	Kanupriya Kabra	5/29/2024
Darshna Siva	5/28/2024	Emily Le	5/29/2024
Preetika Tiwari	5/28/2024	Unnikrishnan Udinoor	5/29/2024
Amit Thakkar	5/28/2024	Simple Yadav	5/29/2024
Dr. Vinay Iyer	5/28/2024	Hima Kalapatapu	5/29/2024
Amit Thakkar	5/28/2024	Sandeep Jain	5/29/2024
Prithvi Arun	5/28/2024	Paddy Subbian	5/29/2024
Gane Sugali	5/28/2024	Aparna Raman	5/29/2024
Lini Kuriyan	5/28/2024	Praveen Vutukuru	5/29/2024
Ramya Venkatachalam	5/29/2024	Pavan Batchu	5/29/2024
Mehul Suresh Kumar Jain	5/29/2024	Ruhi Batchu	5/29/2024
Bharathi Narayanan	5/29/2024	Ravi Krishna Adusumalli	5/29/2024
Manu Bharathi	5/29/2024	Srinivas Dangeti	5/29/2024
Sathiya Narayanan	5/29/2024	Ravi Krishna Adusumalli	5/29/2024
Cipson Jose	5/29/2024	Hasitha Dangeti	5/29/2024
Mukil Narayanan	5/29/2024	Swapna Dangeti	5/29/2024
Nandakumar Gopalakrishnan	5/29/2024	Shashi Devaraju	5/29/2024
Swati Sinha	5/29/2024	Srinivas Reddy	5/29/2024
Dr. Prashant Tiwari	5/29/2024	Vasanti	5/29/2024
Radhakrishna Yeluri	5/29/2024	Vishnu Vardhan Hari	5/29/2024
Radhakrishna Yeluri	5/29/2024	Srividya Hari	5/29/2024
Jerin Joy	5/29/2024	Vijaya Divakaruni	5/29/2024

1.4. Scoping Report Organization

This Scoping Report summarizes the comments and issues identified during the scoping period. The City reviewed and considered all of the scoping comments received in preparing the IS/MND for the Project.

- **Section 2** provides a summary of the Project.
- **Section 3** provides a summary of all comments received and issues raised during the Project's scoping period.
- **Section 4** provides a summary of future steps in the planning process and indicates opportunities for public participation in the environmental review process.
- **Attachments** that follow Section 4 include the mailed notice, scoping presentation, and scoping comment summary and letters.

2. SUMMARY OF THE PROPOSED PROJECT

SVP is proposing to construct approximately 2.24 miles of a new overhead and/or underground 115 kV transmission line. The NRS to KRS 115 kV Transmission Line Project would be built to accommodate energization at 230 kV, however it would initially be operated at 115 kV.

The transmission line would start at the Northern Receiving Station, south of the intersection of Bill Walsh Way and Stars and Stripes Drive, just southeast of Levi's Stadium. The transmission line would travel approximately 2.24 miles south and end at the Kifer Receiving Station, approximately 0.1 miles northwest of the intersection of Lafayette Street and Central Expressway.

Two options are being considered for the northern segment of this project: overhead and underground. The northern segment that contains both overhead and underground options would start at NRS, follow Lafayette Street, and end approximately 300 feet south of the intersection of Lafayette Street and Agnew Road, covering approximately 0.74 miles.

Depending on the option selected, the transmission line would be built either completely overhead (Option 1), or as a combination of underground and overhead (Option 2). The underground segment, if chosen, would place the transmission line underground after a portion of overhead alignment where the line would leave NRS and enter the median of Lafayette and transition underground. The overall northern segment is approximately 0.74 miles long. The underground segment would transition to overhead approximately 300 feet south of the intersection of Lafayette Street and Agnew Road, then continue overhead south of Agnew Road to connect to the KRS. South of Agnew Road, the route would be overhead, regardless of the Option chosen.

The proposed Project is comprised of the following components/facilities:

- **115 kV Transmission Line:** The majority of the new 115 kV transmission line would be constructed along the following streets: Lafayette Street, Bassett Street and Duane Avenue. The new route would require approximately 39 poles (if overhead). The transmission line would be built to support a 230 kV transmission line, but would be initially energized at 115 kV, allowing for future capacity expansion. New poles would consist of tubular steel monopoles, which are anticipated to range from 85 to 150 feet tall (average height of 115 feet), with a diameter of approximately 2 to 4 feet. At some locations the poles will support the new 115 kV circuit as well as an existing 60 kV circuit and distribution and communication lines.
- **Replacement of Existing Distribution and Telecommunication Lines.** Some existing distribution lines and/or telecommunication lines along the proposed route would be transferred to the new poles to be underbuilt on the new poles. Some existing poles will be removed.
- **Substation Modifications.** No substation modifications would occur as part of the proposed Project. Both receiving stations are existing and would be rebuilt or expanded prior to the proposed Project. New poles would be placed within the NRS and KRS substations to bring the new 115 kV circuit to the appropriate substation rack.

3. SUMMARY OF SCOPING COMMENTS

This section of the report summarizes the comments received from the public during the scoping process. Table 1-1 provides a list of commenters who provided comments. A number of environmental concerns were raised during the scoping process that focused on the Project's potential effects to environmental resources and issue areas.

3.1. Form Letter Summary

3.1.1. Health Concerns – EMF

Commentors expressed concern related to electromagnetic fields (EMF) emitted by transmission lines. They expressed concern about the health risks correlated with EMF exposure, especially due to the proximity of the line to residential communities along Lafayette Street. The commentors state that even a small risk should not be ignored.

Impacts from electromagnetic fields are not analyzed under CEQA. However, due to the concern from the public, SVP has conducted an EMF study. This study is included in the IS/MND as Appendix G, EMF Report. The EMF Report broke up the Proposed Project into 19 segments and presents calculations for the current year, 2024, and for the anticipated construction year, 2028, for normal and peak loads. The EMF discussion in the IS/MND is focused on the EMF measurements 60 feet to the east of the Project's centerline, for Segments 1 through 6, which are located adjacent to the residential community where the majority of comments were sent from. The IS/MND also includes proposed EMF Design Guidelines to be considered during final engineering. Please see Section 4.15, Electric and Magnetic Fields Summary for a summary of EMFs, and a discussion of impacts due to EMF.

One commentor specifically stated that the project would create a problem for the residential community near the Project, who already have to deal with road, train, and airplane noise. Construction of the Project would create temporary noise, but once operational, there would be no additional noise created by the Project. The public health-related impacts of the project, aside from EMF, are considered in the IS/MND's analysis of impacts related to various environmental resources environmental resources, such as air (Section 5.3), noise (Section 5.13), and water (Section 5.10), that may, in turn, affect public health. For example, Section 5.3 (Air Quality) addresses attainment of air quality standards and includes dust control measures to protect human health.

3.1.2. Increased Risk for Catastrophic Accidents and Fire Hazards

Commentors expressed concern about placing the transmission line in an already congested utility zone because of the heightened risk of accidents and fire hazards due to the proximity to railway lines, residential buildings, and heavy traffic.

As stated in Section 4.10, the objective of the Project is to increase SVP's system capacity and reliability, which should result in less power outages and service interruptions after construction is completed. As stated in Section 5.20, Wildfire, the Project would update and install new electrical line equipment, which would reduce the risk of a system failure or line fault due to aging equipment. Section 5.9, Hazards and Hazardous Materials includes a discussion of accident conditions that could cause impacts, and the mitigation measures proposed to be implemented to reduce these impacts to less than significant level. Impacts related to traffic and safety are discussed in Section 5.17, Transportation, which includes a mitigation measure to protect emergency access throughout the City and ensure the safety of the nearby roadways.

3.1.3. Impact on Home Insurance Costs and Property Value

Commentors expressed concern that their home insurance costs may increase, and their property values decrease, due to the proximity of the Project to residents.

CEQA focuses on the potential physical impacts of a project. Economic and social effects may be considered under CEQA, but by themselves, are not treated as significant effects on the environment. The economic effects of a project need only be considered if those effects themselves would cause significant physical impacts on the environment. Such secondary effects are typically difficult to predict (it is unknown whether or not home insurance costs would increase, or property values decrease), and an IS/MND is not required to speculate about such secondary impacts. However, if the insurance costs increased or the property values decreased, neither of these are, nor would cause, a significant physical impact on the environment. Therefore, given the CEQA guidance regarding social and economic impacts, this would not be considered a significant effect on the environment.

3.1.4. Aesthetic Impact

Commentors expressed concern about the addition of poles for the transmission line, and their impact on the visual appeal of the neighborhood. The commentor stated that the additional poles would spoil the aesthetic beauty of the residential area.

The Project is in a highly urbanized area, with the majority of residents located near the northern portion of the Project, where, depending on the option chosen, would be constructed either overhead within the median of Lafayette Street, or underground in Lafayette Street. Both options run parallel to Lafayette Street and an existing rail road right of way. The median includes trees which will be preserved to the extent possible (see Appendix D, Arborist Report) which will minimize the visual impact of any overhead poles. Both to the east and west of Lafayette Street are neighborhoods. These neighborhoods are geographically separated by Lafayette Street, which has four lanes and is approximately 75 feet wide, plus the railroad right of way, which is approximately 50 feet wide and fenced off. Additionally, there is a large wall that separates the neighborhood to the west from Lafayette Street and the railroad right of way. The transmission line was sited in this corridor, among other reasons, because of the existing visual setting, which includes structures similar to what is being proposed for this Project, and that it is partially screened from the adjacent neighborhoods. Because of consistency of the proposed Project's components with the existing setting and the location of the Project near other utilities or right of ways, makes this impact less than significant. See Section 5.1, Aesthetics, for a full discussion of the aesthetic impacts of the project.

3.1.5. Complexity and Inconvenience

Commentors expressed concerns about the disruption to their daily lives, citing noise pollution, road closures, and restricted access to homes as potential disruptions. Commentors also expressed concerns about the possibility of power outages and service interruptions from ongoing maintenance activities. One commentor, a representative of the company BiCMOS, specifically expressed concerns about the potential service disruptions due to construction of the Project that may affect the underground utilities that serve their company.

It is acknowledged in the IS/MND that construction of the Project would create impacts related to environmental resources such as aesthetics, air quality, noise, transportation, and hazards. Impacts from construction are typically considered less than significant due to their intermittent and temporary nature, especially for a transmission line project, which requires the construction work to move along the Project route. See Section 5 for a discussion of construction impacts for each environmental resource.

While power outages and service interruptions may be needed during construction to safely connect or disconnect elements from the transmission system, these would be temporary and rare. Any service

interruptions due to relocation of utilities would be coordinated with the utility owner, and nearby residents and businesses would be notified in advance of this work, to reduce impacts. As stated in Section 4.10, the objective of the Project is to increase SVP's system capacity and reliability, which should result in less power outages and service interruptions after construction is completed.

The IS/MND also acknowledges that the underground construction efforts for Option 2 would result in more intense, and longer, construction impacts when compared to the overhead construction of Option 1, due to the greater amount of ground disturbance, and the multitude of existing underground utilities in the area. Additionally, Option 2 could cause greater disruptions in the future, as its location underground makes it more difficult to reach for maintenance or emergency work.

3.1.6. Exploring Alternatives

Commentors suggested exploring alternatives such as upgrading existing power lines or implementing underground power lines. They recommended this due to potential benefits such as safety, reliability, and aesthetic impact. The commentors also suggested investigating advanced technologies or alternative routing options. The commentors suggested considering alternative options that prioritize public safety and minimize impacts to residents.

SVP conducted an Alternatives Analysis as part of the project development process. Several routes were considered, and three were analyzed in the alternatives analysis. The proposed Project route was chosen because, among other reasons, it had fewer impacts, fewer engineering design challenges, fewer permitting challenges, and it met the project objectives the best when compared to the other options. See Section 4.16, Alternatives, and Appendix G.

Upgrading existing power lines This alternative was not analyzed in detail because this alternative would not meet the objectives of the proposed Project. The Project seeks to increase SVP's system capacity and reliability by installing a 115 kV transmission line between NRS and KRS, which would create a new connection between these substations, increasing the redundancy and reliability of SVP's electrical grid. Additionally, as stated in Section 4.11, some existing distribution lines would be transferred onto the new poles, which consolidates the energy corridor and increases the reliability by placing components on newly built poles.

Underground power lines. This "alternative" is explored as Option 2 of the IS/MND, and the impacts of Option 2 are discussed under each environmental resource in Section 5.

Alternative locations. This alternative was already explored as part of the Alternatives Analysis, and the proposed Project location was chosen because it had fewer impacts than other locations, and best met SVP's objectives.

Priority for public safety. SVP prioritized public safety in the design of the Project. As stated in Section 4.11, the transmission line would be designed to adhere to National Electrical Safety Code (NESC) and California Public Utilities Commission (CPUC) General Order 95, which define separation of structures from adjacent buildings or other utility facilities. Section 4.12.5.1 describes safety measures implemented during construction of the project, designed to protect public safety. See section 5.9, Hazards and Hazardous Materials for a discussion of safety in relation to accidental spills of hazardous materials, the presence of existing subsurface contamination, the risk of wildfire, and aircraft safety. Section 5.17, Transportation discusses safety in relation to the transportation system.

3.1.7. Other

The commentors requested a meeting with city officials and representatives from the utility company to discuss the commentors concerns. The commentors expressed opposition of the installation of the power line.

SVP has scheduled an in person public meeting on August 22, 2024, to discuss the commentors concerns during the IS/MND comment period. This meeting will be attended by SVP/City staff, and by industry professionals who can answer questions about the transmission line.

4. SUMMARY OF FUTURE STEPS IN THE ENVIRONMENTAL REVIEW PROCESS

An important part of the environmental review process is engaging the public and relevant agencies from the earliest stages of and throughout the process to identify issues, comments, and concerns. Figure 4-1 illustrates the steps in the CEQA review process and where the City's decision falls within this process.

The public scoping period, when the comments in this report were received, is highlighted with an orange outline. The next opportunity for public involvement is the 30-day review process of the IS/MND.

Figure 4-1. Project Review and Timeline

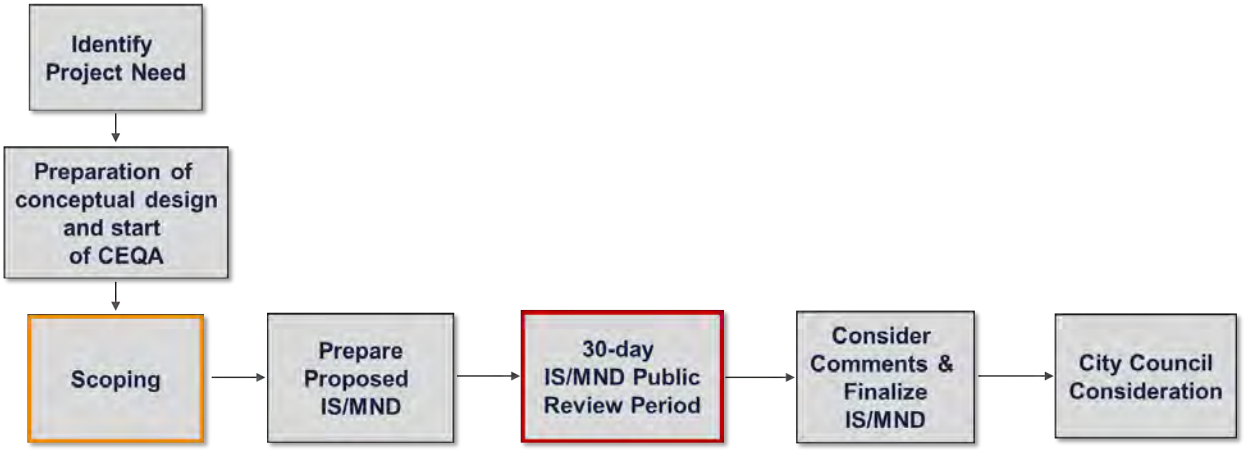

Attachment A

Public Scoping Meeting Notices

NOTICE

PUBLIC SCOPING MEETING FOR SVP NRS-KRS 115 kV TRANSMISSION LINE PROJECT

Thursday, April 25, 2024

Project Background: Silicon Valley Power (SVP) is proposing to construct approximately 2.24 miles of new 115 kilovolt (kV) transmission line within the northeastern area of the City of Santa Clara. SVP's primary objective of the new 115kV transmission line (Proposed Project) is to connect the Northern Receiving Station (NRS) and Kifer Receiving Station (KRS). By connecting these two receiving stations, it will allow energy to be balanced and redistributed within SVP's transmission receiving stations and allow SVP to serve new load growth projected based on the SVP Resource Load Forecast.

The new power line would begin at the Northern Receiving Station, located south of the intersection of Bill Walsh Way and Lafayette Street, and would continue to the Kifer Receiving Station, which is located on Lafayette Street. Most of the new 115kV transmission line would be constructed along the following city streets: Lafayette Street, Bassett Street and Duane Avenue. The transmission line would be built to support a 230kV transmission line, but would be initially energized at 115kV, allowing for future capacity expansion.

Construction is estimated to take approximately 14 months and be completed by early 2028.

Information Available: SVP is preparing an Initial Study/Mitigated Negative Declaration (IS/MND) in accordance with the California Environmental Quality Act (CEQA), describing the project and its potential environmental effects. The IS/MND will be posted on the project website after publication.

Project Website: Scoping materials and information about the Proposed Project are available at: www.siliconvalleypower.com/115kv

Informal Scoping Meeting: In order to help the affected community understand the Proposed Project and to explain how the public can participate in SVP's decision-making process, SVP will hold a virtual informational scoping meeting on April 25, 2024. This informal workshop is an opportunity for agencies and the public to ask questions about the project being proposed and the scope of the environmental document and provide input on the scope and content of the environmental document. Written and oral comments may be submitted during the workshop, via US Mail, or email until May 8, 2024.

Thursday, April 25, 2024, from 5 p.m. to 7 p.m.
Please register in advance of the webinar at:
https://us02web.zoom.us/webinar/register/WN_7L0n1KI7RFKFTFI43STN-Q

Scoping Period: The public scoping period will be held from April 8 through May 8, 2024. Written or emailed comments must be received by **5:00 p.m. on May 8, 2024**, at the following mailing address or email address:

Allie Jackman
Principal Electric Utility Engineer
Silicon Valley Power
c/o Aspen Environmental Group
235 Montgomery Street, Suite 967
San Francisco, CA 94104-3002
NRS-KRS@aspeneg.com

NOTICE

PUBLIC SCOPING MEETING FOR SVP NRS-KRS 115 kV TRANSMISSION LINE PROJECT

Thursday, May 23, 2024

Project Background: Silicon Valley Power (SVP) is proposing to construct approximately 2.24 miles of new 115 kilovolt (kV) transmission line within the northeastern area of the City of Santa Clara. SVP's primary objective of the new 115kV transmission line (Proposed Project) is to connect the Northern Receiving Station (NRS) and Kifer Receiving Station (KRS). By connecting these two receiving stations, it will allow energy to be balanced and redistributed within SVP's transmission receiving stations and allow SVP to serve new load growth projected based on the SVP Resource Load Forecast.

The new power line would begin at the Northern Receiving Station, located south of the intersection of Bill Walsh Way and Lafayette Street, and would continue to the Kifer Receiving Station, which is located on Lafayette Street. Most of the new 115kV transmission line would be constructed along the following city streets: Lafayette Street, Bassett Street and Duane Avenue. The transmission line would be built to support a 230kV transmission line, but would be initially energized at 115kV, allowing for future capacity expansion.

Construction is estimated to take approximately 14 months and be completed by early 2028.

Information Available: SVP is preparing an Initial Study/Mitigated Negative Declaration (IS/MND) in accordance with the California Environmental Quality Act (CEQA), describing the project and its potential environmental effects. The IS/MND will be posted on the project website after publication.

Project Website: Scoping materials, a recording of the previous scoping meeting, and information about the Proposed Project are available at: www.siliconvalleypower.com/115kv

Informal Scoping Meeting: In order to help the affected community understand the Proposed Project and to explain how the public can participate in SVP's decision-making process, SVP will hold a ***second*** virtual informational scoping meeting on May 23, 2024. This informal workshop is an opportunity for agencies and the public to ask questions about the project being proposed and the scope of the environmental document and provide input on the scope and content of the environmental document. Written and oral comments may be submitted during the workshop, via US Mail, or email until May 29, 2024.

Thursday, May 23, 2024, from 5 p.m. to 7 p.m.
Please register in advance of the webinar at:
https://us02web.zoom.us/webinar/register/WN_wW0QfYKBSp25hI6vIknzsA

Scoping Period: ***The public scoping period was extended an additional three weeks to conduct an expanded outreach effort***. The scoping period will be held from April 8 through May 29, 2024. Written or emailed comments must be received by **5:00 p.m. on May 29, 2024**, at the following mailing address or email address:

Allie Jackman
Principal Electric Utility Engineer
Silicon Valley Power
c/o Aspen Environmental Group
235 Montgomery Street, Suite 967
San Francisco, CA 94104-3002
NRS-KRS@aspeneg.com

Attachment B

Scoping Meeting Presentation

SVP Public Scoping Meeting #2

NRS-KRS 115 kV Transmission Line Project

May 23, 2024

1

Key Players and their Roles in the CEQA Process

- **Silicon Valley Power (SVP):** Lead Agency under California Environmental Quality Act (CEQA) and Project Proponent
  - **AECOM**: Program and Project Managers for SVP
  - **ECI**: Engineer of Record for SVP
  - **Aspen Environmental Group**: Environmental contractor for SVP

2

Meeting Agenda

- Welcome and Introduction
- Purpose of this Meeting: Scoping
- Description of Proposed Project and Need
- Route Options Considered
- CEQA Process
- Project Schedule
- Q&A
- Public Comments

3

Purpose of This Meeting: Scoping

- To inform the public and responsible agencies about an upcoming project for which an Initial Study (IS) and a Mitigated Negative Declaration (MND) will be prepared
- To inform the public about the environmental review process
- To solicit input regarding the appropriate scope of issues to be studied in the IS/MND
- To identify issues of concern and areas of potential controversy

4

Project Overview:
115kV Transmission Line
Northern to Kifer Receiving Station

- Construct a new 115kV overhead transmission line of approximately 2.24 miles between Northern Receiving Station (NRS) and Kifer Receiving Station (KRS)
- The transmission line would be built to support a 230kV transmission line, but would be initially energized at 115kV, allowing for future capacity expansion.
- Construction is estimated to take approximately 14 months and be completed by early 2028.

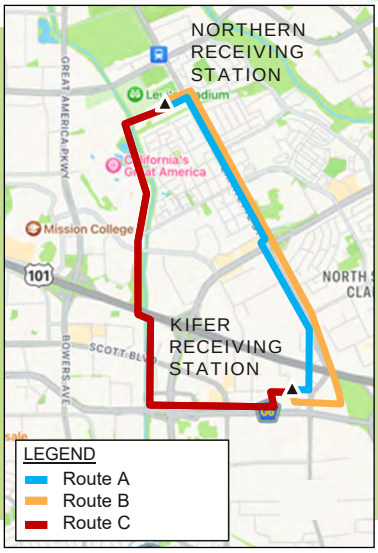

5

Project Need

- Needed to accommodate approved and under construction load growth and reliability
- Balance and redistribute loads throughout the City
- System Operating Limit will be limited to ~819MW if transmission line is not constructed
- **Key Items:** constructability, existing utilities, power delivery, potential growth, aesthetics, tree removals, maintenance considerations, construction costs, and schedule

6

Three Route Options Considered

- An assessment was prepared to determine the preferred route for the Proposed Project.
- **Key consideration** – feasibility and schedule (2028 completion date)
  - Route A (Proposed Project)– Being analyzed as the Proposed Project in CEQA document
    - Along Lafayette Street to Bassett Street and Duane Avenue
  - Route B (considered and eliminated)
    - Follows Route A on Lafayette Street until diverging at Bassett and George Street to the UPRR ROW and then crosses several private parcels to KRS.
  - Route C (considered and eliminated)
    - West side of San Tomas Aquino Creek

7

Routes

- **Route A** (Proposed Project)
- **Route B** (considered and eliminated)
  - UPRR right of way is too narrow (concerns with induced current on the rail lines and additional permitting and design review)
  - Properties surrounding UPPR do not have sufficient space to place structures
  - Require extensive easement costs and coordination
  - UPRR permits
- **Route C** (considered and eliminated)
  - Majority within Creek boundaries
  - Replace existing 60kV line where available
  - Easements and permitting - unknown if permits would even be feasible and if feasible would not meet schedule due to extensive permitting schedules
  - Longest route

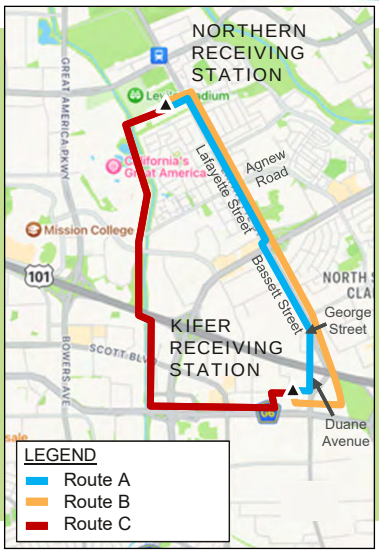

8

Proposed Project – Route A

Total Route Spans 2.24 miles

- **Northern Segment** (NRS to Agnew)
  - 0.74 miles
  - Overhead and underground options
  - Lafayette Street
- **Southern Segment** (Agnew to KRS)
  - 1.5 miles
  - Replaces existing transmission lines where available
  - Lafayette Street, Bassett Street, Duane Avenue

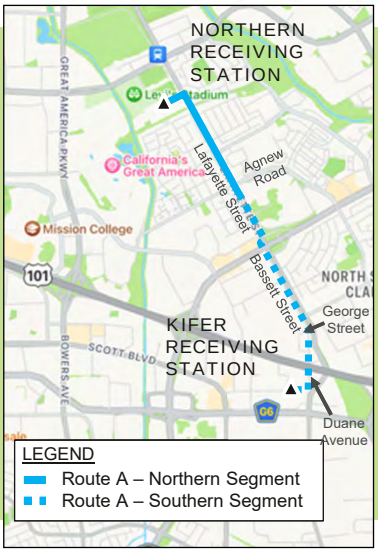

9

Route A, Option 1: Overhead Northern Segment (Preferred)

Northern Segment (0.74 Miles)

- Nine new poles within center median of Lafayette Street
- No existing overhead transmission
- Residential development on both sides of Lafayette Street
- Poles spaced every 250-500 feet on average and ~85-140 feet in height
- Located within existing ROW or easements
- Minimal utility relocation
- Would minimize landscape/tree removal as part of design
- An overhead transmission line can deliver more power and accommodate future growth with the option for a future underbuilt 60kV or 115kV transmission line

10

Route A, Option 1: Overhead Northern Segment (Preferred)

Looking South on Lafayette Street at Hogan Drive

Proposed Project Rendering Looking North on Lafayette Street just south of Hope Drive

11

Route A, Option 2: Underground Northern Segment (Not Preferred)

- Constraints with constructability, schedule, power deliverability, and aesthetics
- 25 existing utilities crossing or conflicts with underground alignment in Lafayette
- Requires relocation of 300 feet of two transmission gas mains for PG&E and DVR
  - The DVR shutdown can only occur twice a year
  - PG&E work would be on PG&E schedule – will not meet 2028 date
- Would also need to cross multiple utility lines
  - Could require not meeting minimum spacing requirements or significant excavation up to 20' deep

Utility Conflict #	Existing Utility	Quantity/Size	Approximate Location Along Lafayette ST.
1	Electric	Ductbank with five 5" conduits and one 4" conduit	South of Agnew Rd.
2	Communication	Unknown * typically one or more pipes, each ranging from 1" to 4"	South of Agnew Rd.
3	Communication	Unknown * typically one or more pipes, each ranging from 1" to 4"	South of Agnew Rd.
4	Natural Gas (PG&E)	12"	South of Agnew Rd.
5	Sanitary Sewer	30"	South of Agnew Rd.
6	Natural Gas (PG&E)	6"	South of Agnew Rd.
7	Water	12"	South of Agnew Rd.
8	Natural Gas (SVP)	12"	South of Agnew Rd.
9	Electric	Ductbank with five 5" conduits and one 4" conduit	South of Agnew Rd.
10	Electric	Ductbank with four 5" conduits and one 4" conduit	North of Agnew Rd.
11	Communication	4"	North of Agnew Rd.
12	Natural Gas (PG&E)	6"-24" *	Between Hope Dr. and Agnew Rd.
13	Sanitary Sewer	8"	Between Hope Dr. and Agnew Rd.
14	Storm Drain	15"	South of Hope Dr.
15	Water	12"	Intersection of Hope Dr.
16	Natural Gas (SVP)	12"	Between Eisenhower Dr. and Hope Dr.
17	Natural Gas - Transmission (PG&E)	6"-24" *	Between Eisenhower Dr. and Hope Dr.
18	Electric	1.5" Streetlight conduit *	South of Eisenhower Dr.
19	Electric	1.5" Streetlight conduit *	Intersection of Eisenhower Dr.
20	Sanitary Sewer	21"	North of Eisenhower Dr.
21	Electric	1.5" Streetlight conduit *	North of Hogan Dr.
22	Sanitary Sewer	15"	Between Fairway Glen Dr. and Hogan Dr.
23	Natural Gas (PG&E)	24" *	Between Fairway Glen Dr. and Hogan Dr.
24	Water	8"	Between Fairway Glen Dr. and Hogan Dr.
25	Natural Gas (SVP)	12"	South of Fairway Glen Dr.

* Utility size is estimated, accurate record information is unavailable.

12

Route A, Option 2: Underground Northern Segment (Not Preferred)

- Power Delivery:
  - Can deliver up to 83% of the power of overhead at 115kV due to heat dissipation requirements.
  - Further declines at the 230kV level to 79.9%.
  - **Underground option will limit future load growth and our ability to serve currently entitled customers.**
- Aesthetics:
  - Overhead alignment from NRS to riser pole in median of Lafayette
  - Additional riser pole just south of Agnew on east side of Lafayette

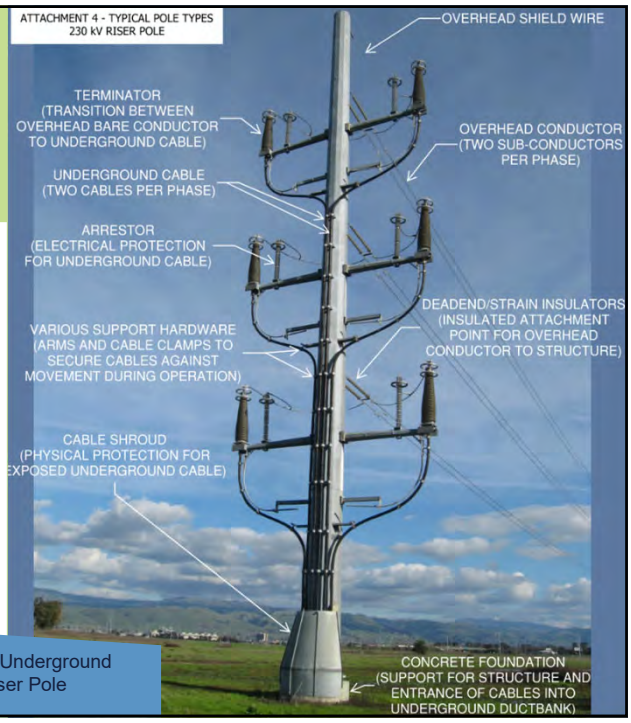

Typical Underground Riser Pole

13

Comparison of Options for Northern Segment

Route A, Option 1 – Overhead (Preferred)	Route A, Option 2 – Underground (Not Preferred)
Ability to meet 2028 schedule.	Can not meet 2028 schedule • Relying on PG&E for utility relocation • DVR shut-down
Maximum transmission capacity	Reduced transmission capacity
Ability to accommodate future growth	Lack of provisions for future growth
Minimize utility relocations and reduce construction disruption to the public	Extended construction timelines with extended lane closures and traffic control
Ease of maintaining the system	Longer restoration times in emergency situations
Northern Segment Costs: ~$9.5 Million Total Project Costs: ~$36 Million	Northern Segment Costs: ~$19 Million Total Project Costs: ~$45.5 Million

14

Why Option 1 is Preferred

- Ability to meet the 2028 energization date
- Can accommodate future additional growth
- Maximum transmission capacity - Can accommodate ~20% more power than underground options for already approved projects
- Reduced construction disruption to the public in comparison to underground options
- Pole space provisions for future additional growth along new transmission segments
- Ease of maintaining the system/restoration in emergency conditions

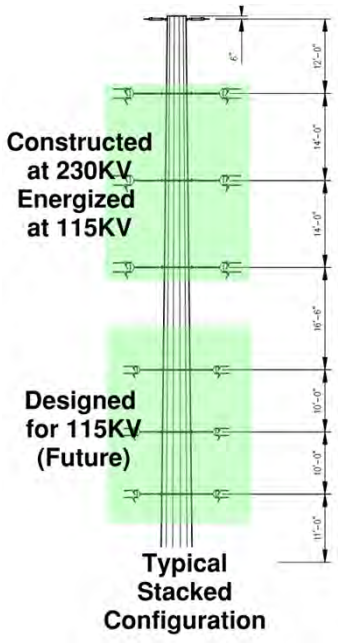

15

Route A – Southern Segment

Southern Segment (1.5 Miles)

- Two existing 60kV overhead transmission lines. Between Agnew and Montague, existing 60kV at the following locations would be replaced
  1. East side of Lafayette Street
  2. West side of Bassett Street
- At Montague Expressway, continue on west side of Bassett Street and replace 1,120 feet of 60kV where existing and install 2,980 feet of new overhead
- Final 980 feet of transmission line from just north of Bayshore to KRS along Duane Avenue would replace an existing 60kV transmission line

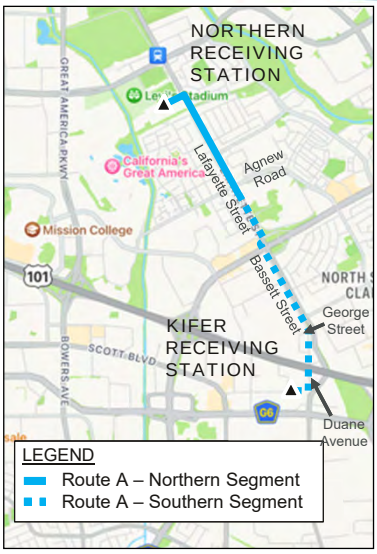

16

Proposed Project

Southern Segment (1.5 Miles)

*Distribution and transmission

From	To	Alignment Consideration	Poles Installed	Poles Removed
Agnew Road	Montague Expressway	East side of Lafayette and west side of Bassett	7	9
Montague Expressway	Bassett and George Street	West side of Bassett	11	11*
Bassett and George Street	Kifer Receiving Station	East side of Bassett and Duane Street	7	3

Looking South on Lafayette Street just south of Agnew

Looking South on Bassett Street just south of Montague

Looking South on Duane Avenue just south of Bayshore

17

Existing Poles

Examples of varying existing poles ranging in heights from 65 to 90 feet in residential neighborhoods.

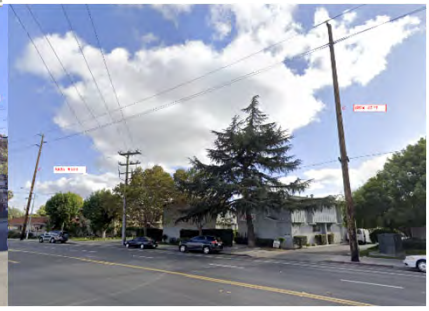

18

CEQA Process

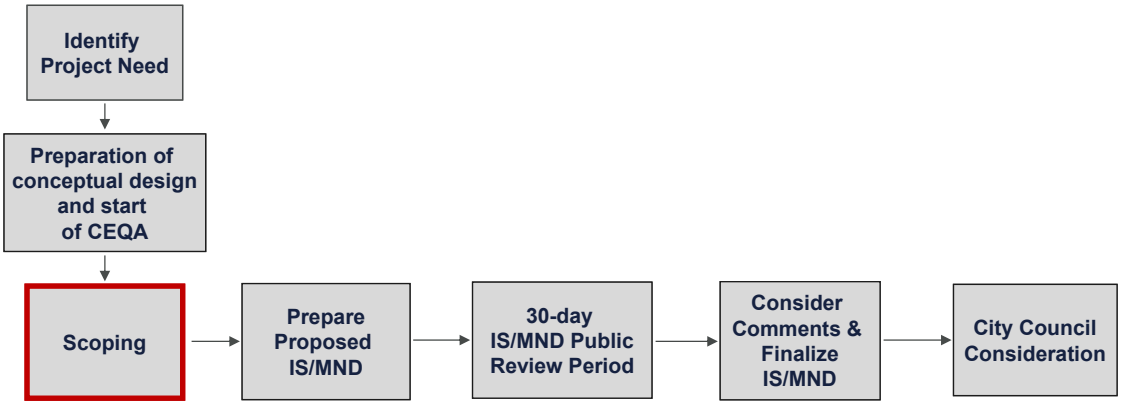

19

Schedule

Task	Timeframe
Design	Feb. 2023 – May 2026
CEQA Process	
Identify Project Need	Jan. 2024
Preparation of conceptual design and start of CEQA	Jan. 2024 – Mar. 2024
CEQA Community Outreach (Scoping)	April 8 – May 29, 2024
Publication of Draft IS/MND and 20-day Public Review Period	Jun. 2024 – Jul. 2024
Consider Comments and Finalize IS/MND	Aug. 2024 – Sep. 2024
City Council Consideration	Oct. 2024 - Nov. 2024
Anticipated Construction	Nov. 2026 – Mar. 2028

20

Initial Study Analysis

Environmental Issue Areas

- Aesthetics
- Agricultural Resources
- Air Quality
- Biological Resources
- Cultural Resources
- Energy
- Geology & Soils
- Greenhouse Gas Emissions
- Hazards & Hazardous Materials
- Hydrology & Water Quality
- Land Use & Planning
- Mineral Resources
- Noise
- Population & Housing
- Public Services
- Recreation
- Transportation/Traffic
- Tribal Cultural Resources
- Utilities & Service Systems
- Wildfire

21

Next Steps

- Public Scoping Period: April 8 – May 29, 2024
  - All public comments submitted during the public scoping period will be reviewed
  - Environmental issues raised will be addressed in the environmental document
- Publication of Draft CEQA IS/MND: ~ June 2024*
  - After publication, the IS/MND will be available for public review and comment
  - All comments on the IS/MND will be reviewed, and changes to the IS/MND will be made, if necessary
- City Council Consideration: ~ November 2024*
  - After the Final IS/MND is published, the City Council will decide to approve or deny the Project

*dates subject to change, assumes no identification of significant impacts

22

Questions?

23

Scoping Comments

- The most useful scoping comments:
  - Identify the location and extent of environmental impacts of the proposed project
  - Recommend modifications that would avoid or reduce impacts of the proposed project
  - Are as specific as possible

24

Comments

- **Mailing address:**

Allie Jackman
Principal Electric Utility Engineer
Silicon Valley Power
c/o Aspen Environmental Group
235 Montgomery Street, Suite 967
San Francisco, CA 94104-3002

- **Email:**

NRS-KRS@aspeneg.com

Please be sure to include your name, address, and email or phone number on all comments.

25

Thank You for Your Input!

26

Attachment C

Written Scoping Comments Received During Scoping Period

Opposition to SVP NRS-KRS 115KV transmission line project

XIAOLING HUANG <shownie_huang@yahoo.com>

Sun 4/14/2024 5:30 PM

To:NRS-KRS Project <NRS-KRS@aspeneg.com>

Hi,

I am writing to express my strong opposition to the proposed high voltage transmission line project near our community. As a resident deeply concerned about the well-being of our neighborhood, I believe that this project poses significant risks to our health, safety, and environment.

The electromagnetic fields generated by high voltage transmission lines have been linked to various adverse health effects, including increased risk of cancer, neurological disorders, and reproductive issues. Placing such infrastructure in close proximity to residential areas puts our families and children at unnecessary risk.

I urge you to reconsider the placement of this project and explore alternative routes or technologies that minimize the negative impacts on our community. Our health, safety, and quality of life should not be sacrificed for the sake of energy infrastructure.

Thank you for considering my concerns. I look forward to hearing from you and participating in the decision-making process regarding this important issue.

Sincerely,
Shownie
Mission Terrace resident

Concerns Regarding new 115 kV power lines.

Cipson Jose <cipsonj@gmail.com>

Wed 5/29/2024 11:13 AM

To:NRS-KRS Project <NRS-KRS@aspeneg.com>;mayorandcouncil@santaclaraca.gov <mayorandcouncil@santaclaraca.gov>;info@siliconvalleypower.com <info@siliconvalleypower.com>; planningcommission@santaclaraca.gov <planningcommission@santaclaraca.gov>;manager@santaclaraca.gov <manager@santaclaraca.gov>

To Whomsoever it may concern,

As a concerned resident of Santa Clara, I am writing to express our apprehensions regarding the proposed installation route for high-power electric transmission lines and poles by Silicon Valley Power (SVP). This initiative is part of the project aimed at connecting the Northern Receiving Station (NRS) and Kifer Receiving Station (KRS).

Having reviewed the materials provided by your office and attended the recent public scoping meeting on May 23, 2024, I have delved into the details of the project. After careful consideration, I must voice my complete opposition to options A and B.

While acknowledging the necessity of upgrading the city's power infrastructure, there are several significant concerns that demand attention:

1. **Health Concerns**: The potential health risks associated with prolonged exposure to unsafe levels of electromagnetic fields (EMFs) emitted by these high-power
2. **Increased Risk for Catastrophic Accidents and Fire Hazards**: The proposed route intersects with an already congested utility zone along Lafayette Street, he
3. **Impact on Home Insurance Costs**: The addition of high-power transmission lines in front of residences introduces additional risk factors that could prompt insu
4. **Property Value Concerns**: The aesthetic and health-related concerns associated with the proposed power lines could adversely affect property values in our co
5. **Aesthetic Impact**: The installation of large electric poles and wires would detract from the visual appeal of our neighborhood, undermining the pride we take in c
6. **Complexity and Inconvenience**: The construction and maintenance of these power lines could disrupt our daily lives, leading to noise pollution, road closures,
7. **Exploring Alternatives**: We urge the city to explore alternative solutions such as upgrading existing lines or implementing underground power lines, despite pot

As a concerned resident of Santa Clara, and a member of a community directly affected by this proposal, I strongly oppose the installation of power lines in options A and B. I implore Silicon Valley Power to consider alternative options that prioritize public health and safety and minimize adverse impacts on Santa Clara residents.

Thank you for your attention to this pressing matter, and eagerly await your response.

Sincerely

Cipson Jose
2142 Payne Pl, Santa Clara
cipsonj@gmail.com
Payne Place Community

Concerns Regarding Upcoming High Power Electric Wire Poles in Our Community(Mission Gardens) for the upcoming SVP project connecting the Northern Receiving Station NRS to Kifer receiving station (KRS).

Anu Alex <anualex@gmail.com>

Mon 5/27/2024 1:45 PM

To:NRS-KRS Project <NRS-KRS@aspeneg.com>;mayorandcouncil@santaclaraca.gov <mayorandcouncil@santaclaraca.gov>; info@siliconvalleypower.com <info@siliconvalleypower.com>;planningcommission@santaclaraca.gov <planningcommission@santaclaraca.gov>;manager@santaclaraca.gov <manager@santaclaraca.gov>

To Whomsoever it may concern,

As a concerned resident of Santa Clara, I am writing to express our apprehensions regarding the proposed installation route for high-power electric transmission lines and poles by Silicon Valley Power (SVP). This initiative is part of the project aimed at connecting the Northern Receiving Station (NRS) and Kifer Receiving Station (KRS).

Having reviewed the materials provided by your office and attended the recent public scoping meeting on May 23, 2024, I have delved into the details of the project. After careful consideration, I must voice my complete opposition to options A and B.

While acknowledging the necessity of upgrading the city's power infrastructure, there are several significant concerns that demand attention:

1. Health Concerns: The potential health risks associated with prolonged exposure to unsafe levels of electromagnetic fields (EMFs) emitted by these high-power electric lines are paramount. Numerous studies have indicated a possible correlation between EMF exposure and various health issues, including heightened risks of certain cancers and neurological disorders, especially in children and the elderly. I have extensively researched this topic and found compelling evidence supporting these concerns. For instance, there is extensive research supporting that magnetic fields generated by the proposed power lines far exceed safe levels for human exposure, posing significant risks to residents, particularly those living within close proximity to the installation site.

   Residents living in close proximity to these high power lines are at greater risk. I have gone through several medical and scientific research papers published on this matter that support our concern on this matter.
   Here are a few links for reference to some such research articles:

- https://www.ncbi.nlm.nih.gov/pmc/articles/PMC10590107/
- https://www.hydroone.com/poweroutagesandsafety_/corporatehealthandsafety_/EMFs/Transmission_Line_EMF_Fields.pdf
- https://www.emrss.com/blogs/emr-shielding-solutions-blogs/what-are-safe-levels-of-emf

As a quick overview from these please see below:

The magnetic field generated by the high power lines is way beyond safe levels for humans. Here is a break up:

- 115kV power transmission line has a Mean Magnetic Field (mG) of 6.5 at a distance of <50 feet.
- 230kV power transmission line has a Mean Magnetic Field (mG) of 19.5 at a distance of <50 feet. (ref. Link2)

As the project stands today, the first row of houses in Mission Gardens on Lafayette Street will be less than 50 feet from the proposed installation point per Route A of these poles.The safe value of magnetic field around humans is 0.7mg (ref. Link3) per numbers listed above, it's evident that residents in close proximity will be exposed to very high unsafe levels of EMF. This will have a significant impact to all the residents within 50-75 feet. As mentioned ,more reference to various NIH research articles on Pubmed can also be provided if needed to reinforce the concerns.

While I am speaking up as a resident of Mission Gardens, there are many other houses and apartment complexes along and near Lafayette St. whose residents will also be impacted by the unsafe levels of EMF.
Even a small risk is substantial for public health safety and can and should not be ignored by authorities; we need to err on the side of caution.

2. Increased Risk for Catastrophic Accidents and Fire Hazards: The proposed route intersects with an already congested utility zone along Lafayette Street, heightening the risk of accidents and fire hazards, especially given the proximity to existing railway lines, residential buildings, and heavy vehicular traffic.
3. Impact on Home Insurance Costs: The addition of high-power transmission lines in front of residences introduces additional risk factors that could prompt insurance companies to raise premiums further, exacerbating the already soaring home insurance costs in the Bay Area.

4. Property Value Concerns: The aesthetic and health-related concerns associated with the proposed power lines could adversely affect property values in our community, posing a significant concern for homeowners who have invested substantially in their properties.
5. Aesthetic Impact: The installation of large electric poles and wires would detract from the visual appeal of our neighborhood, undermining the pride we take in our well-maintained homes and attractive streetscapes.
6. Complexity and Inconvenience: The construction and maintenance of these power lines could disrupt our daily lives, leading to noise pollution, road closures, and restricted access to homes. Moreover, frequent power outages and service interruptions may result from ongoing maintenance activities.
7. Exploring Alternatives: We urge the city to explore alternative solutions such as upgrading existing lines or implementing underground power lines, despite potentially higher upfront costs. These alternatives offer long-term benefits in terms of safety, reliability, and minimal aesthetic impact. Additionally, investigating advanced technologies and alternative routing options could help mitigate the adverse effects on our community.

I respectfully request a meeting with relevant city officials and representatives from the utility company to discuss these concerns in detail and explore viable solutions. Finding a balance between necessary infrastructure upgrades and safeguarding the health, safety, and aesthetic integrity of our community is imperative.

As a concerned resident of Santa Clara, and a member of a community directly affected by this proposal, I strongly oppose the installation of power lines in options A and B. I implore Silicon Valley Power to consider alternative options that prioritize public health and safety and minimize adverse impacts on Santa Clara residents.

Thank you for your attention to this pressing matter. I eagerly await your response and the opportunity to collaborate on finding a satisfactory resolution.

Thankfully,

Anu Alex

4457 Lafayette St, Santa Clara, CA 95054

(408)836-8153

Concerns Regarding Upcoming High Power Electric Wire Poles in Our Community(Mission Gardens) for the upcoming SVP project connecting the Northern Receiving Station NRS to Kifer receiving station (KRS)

Prashant Tiwari <ptiwari2009@yahoo.com>

Wed 5/29/2024 11:40 AM

To:NRS-KRS Project <NRS-KRS@aspeneg.com>;mayorandcouncil@santaclaraca.gov <mayorandcouncil@santaclaraca.gov>; info@siliconvalleypower.com <info@siliconvalleypower.com>;planningcommission@santaclaraca.gov <planningcommission@santaclaraca.gov>;manager@santaclaraca.gov <manager@santaclaraca.gov>; AJackman@santaclaraca.gov <AJackman@santaclaraca.gov>

To Whomsoever it may concern,

As a concerned resident of Santa Clara, I am writing to express our apprehensions regarding the proposed installation route for high-power electric transmission lines and poles by Silicon Valley Power (SVP). This initiative is part of the project aimed at connecting the Northern Receiving Station (NRS) and Kifer Receiving Station (KRS).

Having reviewed the materials provided by your office and attended the recent public scoping meeting on May 23, 2024, I have delved into the details of the project. After careful consideration, I must voice my complete opposition to options A and B.

While acknowledging the necessity of upgrading the city's power infrastructure, there are several significant concerns that demand attention:

1. **Health Concerns**: The potential health risks associated with prolonged exposure to unsafe levels of electromagnetic fields (EMFs) emitted by these high-power electric lines are paramount. Numerous studies have indicated a possible correlation between EMF exposure and various health issues, including heightened risks of certain cancers and neurological disorders, especially in children and the elderly. I have extensively researched this topic and found compelling evidence supporting these concerns. For instance, there is extensive research supporting that magnetic fields generated by the proposed power lines far exceed safe levels for human exposure, posing significant risks to residents, particularly those living within close proximity to the installation site.

   Residents living in close proximity to these high power lines are at greater risk. I have gone through several medical and scientific research papers published on this matter that support our concern on this matter.
   Here are a few links for reference to some such research articles:

- https://www.ncbi.nlm.nih.gov/pmc/articles/PMC10590107/
- https://www.hydroone.com/poweroutagesandsafety_/corporatehealthandsafety_/EMFs/Transmission_Line_EMF_Fields.pdf
- https://www.emrss.com/blogs/emr-shielding-solutions-blogs/what-are-safe-levels-of-emf

   As a quick overview from these please see below:

   The magnetic field generated by the high power lines is way beyond safe levels for humans. Here is a break up:

   - 115kV power transmission line has a Mean Magnetic Field (mG) of 6.5 at a distance of <50 feet.

- 230kV power transmission line has a Mean Magnetic Field (mG) of 19.5 at a distance of <50 feet. (ref. Link2)

As the project stands today, the first row of houses in Mission Gardens on Lafayette Street will be less than 50 feet from the proposed installation point per Route A of these poles.The safe value of magnetic field around humans is 0.7mg (ref. Link3) per numbers listed above, it's evident that residents in close proximity will be exposed to very high unsafe levels of EMF. This will have a significant impact to all the residents within 50-75 feet. As mentioned ,more reference to various NIH research articles on Pubmed can also be provided if needed to reinforce the concerns.

While I am speaking up as a resident of Mission Gardens, there are many other houses and apartment complexes along and near Lafayette St. whose residents will also be impacted by the unsafe levels of EMF.
Even a small risk is substantial for public health safety and can and should not be ignored by authorities; we need to err on the side of caution.

2. **Increased Risk for Catastrophic Accidents and Fire Hazards**: The proposed route intersects with an already congested utility zone along Lafayette Street, heightening the risk of accidents and fire hazards, especially given the proximity to existing railway lines, residential buildings, and heavy vehicular traffic.
3. **Impact on Home Insurance Costs**: The addition of high-power transmission lines in front of residences introduces additional risk factors that could prompt insurance companies to raise premiums further, exacerbating the already soaring home insurance costs in the Bay Area.
4. **Property Value Concerns**: The aesthetic and health-related concerns associated with the proposed power lines could adversely affect property values in our community, posing a significant concern for homeowners who have invested substantially in their properties.
5. **Aesthetic Impact**: The installation of large electric poles and wires would detract from the visual appeal of our neighborhood, undermining the pride we take in our well-maintained homes and attractive streetscapes.
6. **Complexity and Inconvenience**: The construction and maintenance of these power lines could disrupt our daily lives, leading to noise pollution, road closures, and restricted access to homes. Moreover, frequent power outages and service interruptions may result from ongoing maintenance activities.
7. **Exploring Alternatives**: We urge the city to explore alternative solutions such as upgrading existing lines or implementing underground power lines, despite potentially higher upfront costs. These alternatives offer long-term benefits in terms of safety, reliability, and minimal aesthetic impact. Additionally, investigating advanced technologies and alternative routing options could help mitigate the adverse effects on our community.

I respectfully request a meeting with relevant city officials and representatives from the utility company to discuss these concerns in detail and explore viable solutions. Finding a balance between necessary infrastructure upgrades and safeguarding the health, safety, and aesthetic integrity of our community is imperative.

As a concerned resident of Santa Clara, and a member of a community directly affected by this proposal, I strongly oppose the installation of power lines in options A and B. I implore Silicon Valley Power to consider alternative options that prioritize public health and safety and minimize adverse impacts on Santa Clara residents.

Thank you for your attention to this pressing matter. I eagerly await your response and the opportunity to collaborate on finding a satisfactory resolution.

Dr. Prashant Tiwari
4489 Lafayette St, Santa Clara, CA 95054
Cell: 518-892-1551
Mission Gardens Community (Santa Clara Rivermark)

Concerns Regarding Upcoming High Power Electric Wire Poles in Our Community (Mission Gardens) for the upcoming SVP project connecting the Northern Receiving Station NRS to Kifer receiving station (KRS)

Aman S <sharma.aman@gmail.com>

Mon 5/27/2024 2:52 PM

To:NRS-KRS Project <NRS-KRS@aspeneg.com>;info@siliconvalleypower.com <info@siliconvalleypower.com>; manager@santaclaraca.gov <manager@santaclaraca.gov>;mayorandcouncil@santaclaraca.gov <mayorandcouncil@santaclaraca.gov>;planningcommission@santaclaraca.gov <planningcommission@santaclaraca.gov>

To Whomsoever it may concern,

As a concerned resident of Santa Clara, I am writing to express our apprehensions regarding the proposed installation route for high-power electric transmission lines and poles by Silicon Valley Power (SVP). This initiative is part of the project aimed at connecting the Northern Receiving Station (NRS) and Kifer Receiving Station (KRS).

Having reviewed the materials provided by your office and attended the recent public scoping meeting on May 23, 2024, I have delved into the details of the project. After careful consideration, I must voice my complete opposition to options A and B.

While acknowledging the necessity of upgrading the city's power infrastructure, there are several significant concerns that demand attention:

1. **Health Concerns**: The potential health risks associated with prolonged exposure to unsafe levels of electromagnetic fields (EMFs) emitted by these high-power electric lines are paramount. Numerous studies have indicated a possible correlation between EMF exposure and various health issues, including heightened risks of certain cancers and neurological disorders, especially in children and the elderly. I have extensively researched this topic and found compelling evidence supporting these concerns. For instance, there is extensive research supporting that magnetic fields generated by the proposed power lines far exceed safe levels for human exposure, posing significant risks to residents, particularly those living within close proximity to the installation site.

   Residents living in close proximity to these high power lines are at greater risk. I have gone through several medical and scientific research papers published on this matter that support our concern on this matter.
   Here are a few links for reference to some such research articles:

- https://www.ncbi.nlm.nih.gov/pmc/articles/PMC10590107/
- https://www.hydroone.com/poweroutagesandsafety_/corporatehealthandsafety_/EMFs/Transmission_Line_EMF_Fields.pdf
- https://www.emrss.com/blogs/emr-shielding-solutions-blogs/what-are-safe-levels-of-emf

   As a quick overview from these please see below:

   The magnetic field generated by the high power lines is way beyond safe levels for humans. Here is a break up:

- 115kV power transmission line has a Mean Magnetic Field (mG) of 6.5 at a distance of <50 feet.
- 230kV power transmission line has a Mean Magnetic Field (mG) of 19.5 at a distance of <50 feet. (ref. Link2)

As the project stands today, the first row of houses in Mission Gardens on Lafayette Street will be less than 50 feet from the proposed installation point per Route A of these poles.The safe value of magnetic field around humans is 0.7mg (ref. Link3) per numbers listed above, it's evident that residents in close proximity will be exposed to very high unsafe levels of EMF. This will have a significant impact to all the residents within 50-75 feet. As mentioned ,more reference to various NIH research articles on Pubmed can also be provided if needed to reinforce the concerns.

While I am speaking up as a resident of Mission Gardens, there are many other houses and apartment complexes along and near Lafayette St. whose residents will also be impacted by the unsafe levels of EMF.
Even a small risk is substantial for public health safety and can and should not be ignored by authorities; we need to err on the side of caution.

2. **Increased Risk for Catastrophic Accidents and Fire Hazards**: The proposed route intersects with an already congested utility zone along Lafayette Street, heightening the risk of accidents and fire hazards, especially given the proximity to existing railway lines, residential buildings, and heavy vehicular traffic.
3. **Impact on Home Insurance Costs**: The addition of high-power transmission lines in front of residences introduces additional risk factors that could prompt insurance companies to raise premiums further, exacerbating the already soaring home insurance costs in the Bay Area.
4. **Property Value Concerns**: The aesthetic and health-related concerns associated with the proposed power lines could adversely affect property values in our community, posing a significant concern for homeowners who have invested substantially in their properties.
5. **Aesthetic Impact**: The installation of large electric poles and wires would detract from the visual appeal of our neighborhood, undermining the pride we take in our well-maintained homes and attractive streetscapes.
6. **Complexity and Inconvenience**: The construction and maintenance of these power lines could disrupt our daily lives, leading to noise pollution, road closures, and restricted access to homes. Moreover, frequent power outages and service interruptions may result from ongoing maintenance activities.
7. **Exploring Alternatives**: We urge the city to explore alternative solutions such as upgrading existing lines or implementing underground power lines, despite potentially higher upfront costs. These alternatives offer long-term benefits in terms of safety, reliability, and minimal aesthetic impact. Additionally, investigating advanced technologies and alternative routing options could help mitigate the adverse effects on our community.

I respectfully request a meeting with relevant city officials and representatives from the utility company to discuss these concerns in detail and explore viable solutions. Finding a balance between necessary infrastructure upgrades and safeguarding the health, safety, and aesthetic integrity of our community is imperative.

As a concerned resident of Santa Clara, and a member of a community directly affected by this proposal, I strongly oppose the installation of power lines in options A and B. I implore Silicon Valley

Power to consider alternative options that prioritize public health and safety and minimize adverse impacts on Santa Clara residents.

Thank you for your attention to this pressing matter. I eagerly await your response and the opportunity to collaborate on finding a satisfactory resolution.

Best,

Aman Sharma

(Resident - Mission Garden)

Concerns Regarding Upcoming High Power Electric Wire Poles in Our Community(Mission Gardens) for the upcoming SVP project connecting the Northern Receiving Station NRS to Kifer receiving station (KRS).

Neelam <neelam.dabholkar@yahoo.com>

Mon 5/27/2024 2:52 PM

To:NRS-KRS Project <NRS-KRS@aspeneg.com>;mayorandcouncil@santaclaraca.gov <mayorandcouncil@santaclaraca.gov>; info@siliconvalleypower.com <info@siliconvalleypower.com>;planningcommission@santaclaraca.gov <planningcommission@santaclaraca.gov>;manager@santaclaraca.gov <manager@santaclaraca.gov>

To Whomsoever it may concern,

As a concerned resident of Santa Clara, I am writing to express our apprehensions regarding the proposed installation route for high-power electric transmission lines and poles by Silicon Valley Power (SVP). This initiative is part of the project aimed at connecting the Northern Receiving Station (NRS) and Kifer Receiving Station (KRS).

Having reviewed the materials provided by your office and attended the recent public scoping meeting on May 23, 2024, I have delved into the details of the project. After careful consideration, I must voice my complete opposition to options A and B.

While acknowledging the necessity of upgrading the city's power infrastructure, there are several significant concerns that demand attention:

1. **Health Concerns**: The potential health risks associated with prolonged exposure to unsafe levels of electromagnetic fields (EMFs) emitted by these high-power electric lines are paramount. Numerous studies have indicated a possible correlation between EMF exposure and various health issues, including heightened risks of certain cancers and neurological disorders, especially in children and the elderly. I have extensively researched this topic and found compelling evidence supporting these concerns. For instance, there is extensive research supporting that

magnetic fields generated by the proposed power lines far exceed safe levels for human exposure, posing significant risks to residents, particularly those living within close proximity to the installation site.

Residents living in close proximity to these high power lines are at greater risk. I have gone through several medical and scientific research papers published on this matter that support our concern on this matter.

Here are a few links for reference to some such research articles:

- https://www.ncbi.nlm.nih.gov/pmc/articles/PMC10590107/
- https://www.hydroone.com/poweroutagesandsafety_/corporatehealthandsafety_/EMFs/Transmission_Line_EMF_Fields.pdf
- https://www.emrss.com/blogs/emr-shielding-solutions-blogs/what-are-safe-levels-of-emf

As a quick overview from these please see below:

The magnetic field generated by the high power lines is way beyond safe levels for humans. Here is a break up:

Â· 115kV power transmission line has a Mean Magnetic Field (mG) of 6.5 at a distance of <50 feet.

Â· 230kV power transmission line has a Mean Magnetic Field (mG) of 19.5 at a distance of <50 feet. (ref. Link2)

As the project stands today, the first row of houses in Mission Gardens on Lafayette Street will be less than 50 feet from the proposed installation point per Route A of these poles.The safe value of magnetic field around humans is 0.7mg (ref. Link3) per numbers listed above, it's evident that residents in close proximity will be exposed to very high unsafe levels of EMF. This will have a significant

impact to all the residents within 50-75 feet. As mentioned ,more reference to various NIH research articles on Pubmed can also be provided if needed to reinforce the concerns.

While I am speaking up as a resident of Mission Gardens, there are many other houses and apartment complexes along and near Lafayette St. whose residents will also be impacted by the unsafe levels of EMF.

Even a small risk is substantial for public health safety and can and should not be ignored by authorities; we need to err on the side of caution.

2. **Increased Risk for Catastrophic Accidents and Fire Hazards**: The proposed route intersects with an already congested utility zone along Lafayette Street, heightening the risk of accidents and fire hazards, especially given the proximity to existing railway lines, residential buildings, and heavy vehicular traffic.
3. **Impact on Home Insurance Costs**: The addition of high-power transmission lines in front of residences introduces additional risk factors that could prompt insurance companies to raise premiums further, exacerbating the already soaring home insurance costs in the Bay Area.
4. **Property Value Concerns**: The aesthetic and health-related concerns associated with the proposed power lines could adversely affect property values in our community, posing a significant concern for homeowners who have invested substantially in their properties.
5. **Aesthetic Impact**: The installation of large electric poles and wires would detract from the visual appeal of our neighborhood, undermining the pride we take in our well-maintained homes and attractive streetscapes.
6. **Complexity and Inconvenience**: The construction and maintenance of these power lines could disrupt our daily lives, leading to noise pollution, road closures, and

restricted access to homes. Moreover, frequent power outages and service interruptions may result from ongoing maintenance activities.

7. **Exploring Alternatives**: We urge the city to explore alternative solutions such as upgrading existing lines or implementing underground power lines, despite potentially higher upfront costs. These alternatives offer long-term benefits in terms of safety, reliability, and minimal aesthetic impact. Additionally, investigating advanced technologies and alternative routing options could help mitigate the adverse effects on our community.

I respectfully request a meeting with relevant city officials and representatives from the utility company to discuss these concerns in detail and explore viable solutions. Finding a balance between necessary infrastructure upgrades and safeguarding the health, safety, and aesthetic integrity of our community is imperative.

As a concerned resident of Santa Clara, and a member of a community directly affected by this proposal, I strongly oppose the installation of power lines in options A and B. I implore Silicon Valley Power to consider alternative options that prioritize public health and safety and minimize adverse impacts on Santa Clara residents.

Thank you for your attention to this pressing matter. I eagerly await your response and the opportunity to collaborate on finding a satisfactory resolution.

Neelam Dabholkar,
1914 Garzoni pl,
Resident of Mission Garden community

Concerns Regarding Upcoming High Power Electric Wire Poles in Our Community(Mission Gardens) for the upcoming SVP project connecting the Northern Receiving Station NRS to Kifer receiving station (KRS).

Gane Sugali <ganenaik@yahoo.com>

Mon 5/27/2024 2:55 PM

To:NRS-KRS Project <NRS-KRS@aspeneg.com>;mayorandcouncil@santaclaraca.gov <mayorandcouncil@santaclaraca.gov>; info@siliconvalleypower.com <info@siliconvalleypower.com>;planningcommission@santaclaraca.gov <planningcommission@santaclaraca.gov>
Cc:Gane Sugali <ganenaik@yahoo.com>;Ashwini Kumbavath <ashwini208@yahoo.com>

To Whomsoever it may concern,
As a concerned resident of Santa Clara, I am writing to express our apprehensions regarding the proposed installation route for high-power electric transmission lines and poles by Silicon Valley Power (SVP). This initiative is part of the project aimed at connecting the Northern Receiving Station (NRS) and Kifer Receiving Station (KRS).
Having reviewed the materials provided by your office and attended the recent public scoping meeting on May 23, 2024, I have delved into the details of the project. After careful consideration, I must voice my complete opposition to options A and B.
While acknowledging the necessity of upgrading the city's power infrastructure, there are several significant concerns that demand attention:
Health Concerns: The potential health risks associated with prolonged exposure to unsafe levels of electromagnetic fields (EMFs) emitted by these high-power electric lines are paramount. Numerous studies have indicated a possible correlation between EMF exposure and various health issues, including heightened risks of certain cancers and neurological disorders, especially in children and the elderly. I have extensively researched this topic and found compelling evidence supporting these concerns. For instance, there is extensive research supporting that magnetic fields generated by the proposed power lines far exceed safe levels for human exposure, posing significant risks to residents, particularly those living within close proximity to the installation site.
Residents living in close proximity to these high power lines are at greater risk. I have gone through several medical and scientific research papers published on this matter that support our concern on this matter.
Here are a few links for reference to some such research articles:

https://www.ncbi.nlm.nih.gov/pmc/articles/PMC10590107/
https://www.hydroone.com/poweroutagesandsafety_/corporatehealthandsafety_/EMFs/Transmission_Line_EMF_Fields.pdf
https://www.emrss.com/blogs/emr-shielding-solutions-blogs/what-are-safe-levels-of-emf

As a quick overview from these please see below:

The magnetic field generated by the high power lines is way beyond safe levels for humans. Here is a break up:
· 115kV power transmission line has a Mean Magnetic Field (mG) of 6.5 at a distance of <50 feet.
· 230kV power transmission line has a Mean Magnetic Field (mG) of 19.5 at a distance of <50 feet. (ref. Link2)

As the project stands today, the first row of houses in Mission Gardens on Lafayette Street will be less than 50 feet from the proposed installation point per Route A of these poles.The safe value of magnetic field around humans is 0.7mg (ref. Link3) per numbers listed above, it's evident that residents in close proximity will be exposed to very high unsafe levels of EMF. This will have a significant impact to all the residents within 50-75 feet. As mentioned ,more reference to various NIH research articles on Pubmed can also be provided if needed to reinforce the concerns.

While I am speaking up as a resident of Mission Gardens, there are many other houses and apartment complexes along and near Lafayette St. whose residents will also be impacted by the unsafe levels of EMF.
Even a small risk is substantial for public health safety and can and should not be ignored by authorities; we need to err on the side of caution.
Increased Risk for Catastrophic Accidents and Fire Hazards: The proposed route intersects with an already congested utility zone along Lafayette Street, heightening the risk of accidents and fire hazards, especially given the proximity to existing railway lines, residential buildings, and heavy vehicular traffic.
Impact on Home Insurance Costs: The addition of high-power transmission lines in front of residences introduces additional risk factors that could prompt insurance companies to raise premiums further, exacerbating the already soaring home insurance costs in the Bay Area.
Property Value Concerns: The aesthetic and health-related concerns associated with the proposed power lines could adversely affect property values in our community, posing a significant concern for homeowners who have invested substantially in their properties.
Aesthetic Impact: The installation of large electric poles and wires would detract from the visual appeal of our neighborhood, undermining the pride we take in our well-maintained homes and attractive streetscapes.
Complexity and Inconvenience: The construction and maintenance of these power lines could disrupt our daily lives, leading to noise pollution, road closures, and restricted access to homes. Moreover, frequent power outages and service interruptions may result from

ongoing maintenance activities.
Exploring Alternatives: We urge the city to explore alternative solutions such as upgrading existing lines or implementing underground power lines, despite potentially higher upfront costs. These alternatives offer long-term benefits in terms of safety, reliability, and minimal aesthetic impact. Additionally, investigating advanced technologies and alternative routing options could help mitigate the adverse effects on our community.
I respectfully request a meeting with relevant city officials and representatives from the utility company to discuss these concerns in detail and explore viable solutions. Finding a balance between necessary infrastructure upgrades and safeguarding the health, safety, and aesthetic integrity of our community is imperative.
As a concerned resident of Santa Clara, and a member of a community directly affected by this proposal, I strongly oppose the installation of power lines in options A and B. I implore Silicon Valley Power to consider alternative options that prioritize public health and safety and minimize adverse impacts on Santa Clara residents.
Thank you for your attention to this pressing matter. I eagerly await your response and the opportunity to collaborate on finding a satisfactory resolution.

Gane Sugali
1921 Silva place Santa Clara 95054
4086214804
Mission Garden community

Concerns with Proposed High Power Electric transmission lines Mission Gardens Community for the upcoming SVP project connecting the Northern Receiving Station NRS to Kifer receiving station (KRS).

Preetika <preetikaloomba1@yahoo.com>

Mon 5/27/2024 3:18 PM

To:mayorandcouncil@santaclaraca.gov <mayorandcouncil@santaclaraca.gov>;info@siliconvalleypower.com <info@siliconvalleypower.com>;planningcommission@santaclaraca.gov <planningcommission@santaclaraca.gov>; manager@santaclaraca.gov <manager@santaclaraca.gov>;NRS-KRS Project <NRS-KRS@aspeneg.com>

To Whomsoever it may concern,

As a concerned resident of Santa Clara, I am writing to express our apprehensions regarding the proposed installation route for high-power electric transmission lines and poles by Silicon Valley Power (SVP). This initiative is part of the project aimed at connecting the Northern Receiving Station (NRS) and Kifer Receiving Station (KRS).

Having reviewed the materials provided by your office and attended the recent public scoping meeting on May 23, 2024, I have delved into the details of the project. After careful consideration, I must voice my complete opposition to options A and B.

While acknowledging the necessity of upgrading the city's power infrastructure, there are several significant concerns that demand attention:

1. **Health Concerns**: The potential health risks associated with prolonged exposure to unsafe levels of electromagnetic fields (EMFs) emitted by these high-power electric lines are paramount. Numerous studies have indicated a possible correlation between EMF exposure and various health issues, including heightened risks of certain cancers and neurological disorders, especially in children and the elderly. I have extensively researched this topic and found compelling evidence supporting these concerns. For instance,

there is extensive research supporting that magnetic fields generated by the proposed power lines far exceed safe levels for human exposure, posing significant risks to residents, particularly those living within close proximity to the installation site.

Here are a few links for reference to some such research articles:

- https://www.ncbi.nlm.nih.gov/pmc/articles/PMC10590107/
- https://www.hydroone.com/poweroutagesandsafety_/corporatehealthandsafety_/EMFs/Transmission_Line_EMF_Fields.pdf
- https://www.emrss.com/blogs/emr-shielding-solutions-blogs/what-are-safe-levels-of-emf

As a quick overview from these please see below:

The magnetic field generated by the high power lines is way beyond safe levels for humans. Here is a break up:

Â· 115kV power transmission line has a Mean Magnetic Field (mG) of 6.5 at a distance of <50 feet.

Â· 230kV power transmission line has a Mean Magnetic Field (mG) of 19.5 at a distance of <50 feet. (ref. Link2)

As the project stands today, the first row of houses in Mission Gardens on Lafayette Street will be less than 50 feet from the proposed installation point per Route A of these poles.The safe value of magnetic field around humans is 0.7mg (ref. Link3) per numbers listed above, it's evident that residents in close proximity will be exposed to very high unsafe levels of

EMF. This will have a significant impact to all the residents within 50-75 feet. As mentioned ,more reference to various NIH research articles on Pubmed can also be provided if needed to reinforce the concerns.

While I am speaking up as a resident of Mission Gardens, there are many other houses and apartment complexes along and near Lafayette St. whose residents will also be impacted by the unsafe levels of EMF.

Even a small risk is substantial for public health safety and can and should not be ignored by authorities; we need to err on the side of caution.

2. **Increased Risk for Catastrophic Accidents and Fire Hazards**: The proposed route intersects with an already congested utility zone along Lafayette Street, heightening the risk of accidents and fire hazards, especially given the proximity to existing railway lines, residential buildings, and heavy vehicular traffic.
3. **Impact on Home Insurance Costs**: The addition of high-power transmission lines in front of residences introduces additional risk factors that could prompt insurance companies to raise premiums further, exacerbating the already soaring home insurance costs in the Bay Area.
4. **Property Value Concerns**: The aesthetic and health-related concerns associated with the proposed power lines could adversely affect property values in our community, posing a significant concern for homeowners who have invested substantially in their properties.
5. **Aesthetic Impact**: The installation of large electric poles and wires would detract from the visual appeal of our

neighborhood, undermining the pride we take in our well-maintained homes and attractive streetscapes.

6. **Complexity and Inconvenience**: The construction and maintenance of these power lines could disrupt our daily lives, leading to noise pollution, road closures, and restricted access to homes. Moreover, frequent power outages and service interruptions may result from ongoing maintenance activities.
7. **Exploring Alternatives**: We urge the city to explore alternative solutions such as upgrading existing lines or implementing underground power lines, despite potentially higher upfront costs. These alternatives offer long-term benefits in terms of safety, reliability, and minimal aesthetic impact. Additionally, investigating advanced technologies and alternative routing options could help mitigate the adverse effects on our community.

I respectfully request a meeting with relevant city officials and representatives from the utility company to discuss these concerns in detail and explore viable solutions. Finding a balance between necessary infrastructure upgrades and safeguarding the health, safety, and aesthetic integrity of our community is imperative.

As a concerned resident of Santa Clara, and a member of a community directly affected by this proposal, I strongly oppose the installation of power lines in options A and B. I implore Silicon Valley Power to consider alternative options that prioritize public health and safety and minimize adverse impacts on residents.

Thank you for your attention to this pressing matter. I eagerly await your response and the opportunity to collaborate on finding a satisfactory resolution.

Sincerely

Preetika Tiwari

Address: 4489 Lafayette St. Santa Clara, CA 95054
Phone: 940-232-6463

Mission Gardens Community at intersection of Lafayette and Hope dr.

Concerns Regarding Upcoming High Power Electric Wire Poles in Our Community(Mission Gardens) for the upcoming SVP project connecting the Northern Receiving Station NRS to Kifer receiving station (KRS).

MEHUL SURESH JAIN <mehulsj162@gmail.com>

Wed 5/29/2024 11:01 AM

To:NRS-KRS Project <NRS-KRS@aspeneg.com>;mayorandcouncil@santaclaraca.gov <mayorandcouncil@santaclaraca.gov>; info@siliconvalleypower.com <info@siliconvalleypower.com>;planningcommission@santaclaraca.gov <planningcommission@santaclaraca.gov>;manager@santaclaraca.gov <manager@santaclaraca.gov>

To Whomsoever it may concern,

As a concerned resident of Santa Clara, I am writing to express our apprehensions regarding the proposed installation route for high-power electric transmission lines and poles by Silicon Valley Power (SVP). This initiative is part of the project aimed at connecting the Northern Receiving Station (NRS) and Kifer Receiving Station (KRS).

Having reviewed the materials provided by your office and attended the recent public scoping meeting on May 23, 2024, I have delved into the details of the project. After careful consideration, I must voice my complete opposition to options A and B.

While acknowledging the necessity of upgrading the city's power infrastructure, there are several significant concerns that demand attention:

Health Concerns: The potential health risks associated with prolonged exposure to unsafe levels of electromagnetic fields (EMFs) emitted by these high-power electric lines are paramount. Numerous studies have indicated a possible correlation between EMF exposure and various health issues, including heightened risks of certain cancers and neurological disorders, especially in children and the elderly. I have extensively researched this topic and found compelling evidence supporting these concerns. For instance, there is extensive research supporting that magnetic fields generated by the proposed power lines far exceed safe levels for human exposure, posing significant risks to residents, particularly those living within close proximity to the installation site.

Residents living in close proximity to these high power lines are at greater risk. I have gone through several medical and scientific research papers published on this matter that support our concern on this matter.

Here are a few links for reference to some such research articles:

https://www.ncbi.nlm.nih.gov/pmc/articles/PMC10590107/

https://www.hydroone.com/poweroutagesandsafety_/corporatehealthandsafety_/EMFs/Transmission_Line_EMF_Fields.pdf

https://www.emrss.com/blogs/emr-shielding-solutions-blogs/what-are-safe-levels-of-emf

As a quick overview from these please see below:

The magnetic field generated by the high power lines is way beyond safe levels for humans. Here is a break up:

- 115kV power transmission line has a Mean Magnetic Field (mG) of

6.5 at a distance of <50 feet.

· 230kV power transmission line has a Mean Magnetic Field (mG) of 19.5 at a distance of <50 feet. (ref. Link2)

As the project stands today, the first row of houses in Mission Gardens on Lafayette Street will be less than 50 feet from the proposed installation point per Route A of these poles.The safe value of magnetic field around humans is 0.7mg (ref. Link3) per numbers listed above, it's evident that residents in close proximity will be exposed to very high unsafe levels of EMF. This will have a significant impact to all the residents within 50-75 feet. As mentioned ,more reference to various NIH research articles on Pubmed can also be provided if needed to reinforce the concerns.

While I am speaking up as a resident of Mission Gardens, there are many other houses and apartment complexes along and near Lafayette St. whose residents will also be impacted by the unsafe levels of EMF.

Even a small risk is substantial for public health safety and can and should not be ignored by authorities; we need to err on the side of caution.

Increased Risk for Catastrophic Accidents and Fire Hazards: The proposed route intersects with an already congested utility zone along Lafayette Street, heightening the risk of accidents and fire hazards, especially given the proximity to existing railway lines, residential buildings, and heavy vehicular traffic.

Impact on Home Insurance Costs: The addition of high-power transmission lines in front of residences introduces additional risk factors that could prompt insurance companies to raise premiums further, exacerbating the already soaring home insurance costs in the Bay Area.

Property Value Concerns: The aesthetic and health-related concerns associated with the proposed power lines could adversely affect property values in our community, posing a significant concern for homeowners who have invested substantially in their properties.

Aesthetic Impact: The installation of large electric poles and wires would detract from the visual appeal of our neighborhood, undermining the pride we take in our well-maintained homes and attractive streetscapes.

Complexity and Inconvenience: The construction and maintenance of these power lines could disrupt our daily lives, leading to noise pollution, road closures, and restricted access to homes. Moreover, frequent power outages and service interruptions may result from ongoing maintenance activities.

Exploring Alternatives: We urge the city to explore alternative solutions such as upgrading existing lines or implementing underground power lines, despite potentially higher upfront costs. These alternatives offer long-term benefits in terms of safety, reliability, and minimal aesthetic impact. Additionally, investigating advanced technologies and alternative routing options could help mitigate the adverse effects on our community.

I respectfully request a meeting with relevant city officials and representatives from the utility company to discuss these concerns in detail and explore viable solutions. Finding a balance between

necessary infrastructure upgrades and safeguarding the health, safety, and aesthetic integrity of our community is imperative.

As a concerned resident of Santa Clara, and a member of a community directly affected by this proposal, I strongly oppose the installation of power lines in options A and B. I implore Silicon Valley Power to consider alternative options that prioritize public health and safety and minimize adverse impacts on Santa Clara residents.

Thank you for your attention to this pressing matter. I eagerly await your response and the opportunity to collaborate on finding a satisfactory resolution.

Mehul Suresh Kumar Jain
2069 Garzoni Pl, Santa Clara, CA-95054
408-326-9386
Mission Gardens

Concerns Regarding Upcoming High Power Electric Wire Poles in Our Community(Mission Gardens) for the upcoming SVP project connecting the Northern Receiving Station NRS to Kifer receiving station (KRS).

Vishaka Sutrave <vishakasutrave@gmail.com>

Mon 5/27/2024 3:54 PM

To:NRS-KRS Project <NRS-KRS@aspeneg.com>;info@siliconvalleypower.com <info@siliconvalleypower.com>; manager@santaclaraca.gov <manager@santaclaraca.gov>;mayorandcouncil@santaclaraca.gov <mayorandcouncil@santaclaraca.gov>;planningcommission@santaclaraca.gov <planningcommission@santaclaraca.gov>

To Whomsoever it may concern,

As a concerned resident of Santa Clara, I am writing to express our apprehensions regarding the proposed installation route for high-power electric transmission lines and poles by Silicon Valley Power (SVP). This initiative is part of the project aimed at connecting the Northern Receiving Station (NRS) and Kifer Receiving Station (KRS).

Having reviewed the materials provided by your office and attended the recent public scoping meeting on May 23, 2024, I have delved into the details of the project. After careful consideration, I must voice my complete opposition to options A and B.

While acknowledging the necessity of upgrading the city's power infrastructure, there are several significant concerns that demand attention:

Health Concerns: The potential health risks associated with prolonged exposure to unsafe levels of electromagnetic fields (EMFs) emitted by these high-power electric lines are paramount. Numerous studies have indicated a possible correlation between EMF exposure and various health issues, including heightened risks of certain cancers and neurological disorders, especially in children and the elderly. I have extensively researched this topic and found compelling evidence supporting these concerns. For instance, there is extensive research supporting that magnetic fields generated by the proposed power lines far exceed safe levels for human exposure, posing significant risks to residents, particularly those living within close proximity to the installation site.

Residents living in close proximity to these high power lines are at greater risk. I have gone through several medical and scientific research papers published on this matter that support our concern on this matter.
Here are a few links for reference to some such research articles:

https://www.ncbi.nlm.nih.gov/pmc/articles/PMC10590107/
https://www.hydroone.com/poweroutagesandsafety_/corporatehealthandsafety_/EMFs/Transmission_Line_EMF_Fields.pdf
https://www.emrss.com/blogs/emr-shielding-solutions-blogs/what-are-safe-levels-of-emf

As a quick overview from these please see below:

The magnetic field generated by the high power lines is way beyond safe levels for humans. Here is a break up:

- 115kV power transmission line has a Mean Magnetic Field (mG) of 6.5 at a distance of <50 feet.
- 230kV power transmission line has a Mean Magnetic Field (mG) of 19.5 at a distance of <50 feet. (ref. Link2)

As the project stands today, the first row of houses in Mission Gardens on Lafayette Street will be less than 50 feet from the proposed installation point per Route A of these poles.The safe value of magnetic field around humans is 0.7mg (ref. Link3) per numbers listed above, it's evident that residents in close proximity will be exposed to very high unsafe levels of EMF. This will have a significant impact to all the residents within 50-75 feet. As mentioned ,more reference to various NIH research articles on Pubmed can also be provided if needed to reinforce the concerns.

While I am speaking up as a resident of Mission Gardens, there are many other houses and apartment complexes along and near Lafayette St. whose residents will also be impacted by the unsafe levels of EMF.
Even a small risk is substantial for public health safety and can and should not be ignored by authorities; we need to err on the side of caution.

Increased Risk for Catastrophic Accidents and Fire Hazards: The proposed route intersects with an already congested utility zone along Lafayette Street, heightening the risk of accidents and fire hazards, especially given the proximity to existing railway lines, residential buildings, and heavy vehicular traffic.

Impact on Home Insurance Costs: The addition of high-power transmission lines in front of residences introduces additional risk factors that could prompt insurance companies to raise premiums further, exacerbating the already soaring home insurance costs in the Bay Area.

Property Value Concerns: The aesthetic and health-related concerns associated with the proposed power lines could adversely affect property values in our community, posing a significant concern for homeowners who have invested substantially in their properties.

Aesthetic Impact: The installation of large electric poles and wires would detract from the visual appeal of our neighborhood, undermining the pride we take in our well-maintained homes and attractive streetscapes.

Complexity and Inconvenience: The construction and maintenance of these power lines could disrupt our daily lives, leading to noise pollution, road closures, and restricted access to homes. Moreover, frequent power outages and service interruptions may result from ongoing maintenance activities.

Exploring Alternatives: We urge the city to explore alternative solutions such as upgrading existing lines or implementing underground power lines, despite potentially higher upfront costs. These alternatives offer long-term benefits in terms of safety, reliability, and minimal aesthetic impact. Additionally, investigating advanced technologies and alternative routing options could help mitigate the adverse effects on our community.

I respectfully request a meeting with relevant city officials and representatives from the utility company to discuss these concerns in detail and explore viable solutions. Finding a balance between necessary infrastructure upgrades and safeguarding the health, safety, and aesthetic integrity of our community is imperative.

As a concerned resident of Santa Clara, and a member of a community directly affected by this proposal, I strongly oppose the installation of power lines in options A and B. I implore Silicon Valley Power to consider alternative options that prioritize public health and safety and minimize adverse impacts on Santa Clara residents.

Thank you for your attention to this pressing matter. I eagerly await your response and the opportunity to collaborate on finding a satisfactory resolution.

Regards,

Vishaka Sutrave
2069 Garzoni Place, Santa Clara
2133099207
Mission Gardens

Concerns Regarding Upcoming High Power Electric Wire Poles in Our Community(Mission Gardens) for the upcoming SVP project connecting the Northern Receiving Station NRS to Kifer receiving station (KRS).

Mehul Suresh Kumar Jain <mehulsureshkumarjain@gmail.com>

Mon 5/27/2024 3:50 PM

To:NRS-KRS Project <NRS-KRS@aspeneg.com>;mayorandcouncil@santaclaraca.gov <mayorandcouncil@santaclaraca.gov>; info@siliconvalleypower.com <info@siliconvalleypower.com>;planningcommission@santaclaraca.gov <planningcommission@santaclaraca.gov>;manager@santaclaraca.gov <manager@santaclaraca.gov>

To Whomsoever it may concern,

As a concerned resident of Santa Clara, I am writing to express our apprehensions regarding the proposed installation route for high-power electric transmission lines and poles by Silicon Valley Power (SVP). This initiative is part of the project aimed at connecting the Northern Receiving Station (NRS) and Kifer Receiving Station (KRS).

Having reviewed the materials provided by your office and attended the recent public scoping meeting on May 23, 2024, I have delved into the details of the project. After careful consideration, I must voice my complete opposition to options A and B.

While acknowledging the necessity of upgrading the city's power infrastructure, there are several significant concerns that demand attention:

Health Concerns: The potential health risks associated with prolonged exposure to unsafe levels of electromagnetic fields (EMFs) emitted by these high-power electric lines are paramount. Numerous studies have indicated a possible correlation between EMF exposure and various health issues, including heightened risks of certain cancers and neurological disorders, especially in children and the elderly. I have extensively researched this topic and found compelling evidence supporting these concerns. For instance, there is extensive research supporting that magnetic fields generated by the proposed power lines far exceed safe levels for human exposure, posing significant risks to residents, particularly those living within close proximity to the installation site.

Residents living in close proximity to these high power lines are at greater risk. I have gone through several medical and scientific research papers published on this matter that support our concern on this matter.

Here are a few links for reference to some such research articles:

https://nam02.safelinks.protection.outlook.com/?

url=https%3A%2F%2Fwww.ncbi.nlm.nih.gov%2Fpmc%2Farticles%2FPMC10590107%2F&data=05%7C02%7CNRS-KRS%40aspeneg.com%7C65ac8d1d694941ea9a0708dc7e9f4905%7Cf56a45392d8e4b0d8454a64203aa39d3%7C0%7C0%7C638524470296577594%7CUnknown%7CTWFpbGZsb3d8eyJWIjoiMC4wLjAwMDAiLCJQIjoiV2luMzIiLCJBTiI6Ik1haWwiLCJXVCI6Mn0%3D%7C60000%7C%7C%7C&sdata=fL%2FKLHk1gune4ikFTzsPntRdEzFX3FwrP2DAjN1g4dw%3D&reserved=0

https://nam02.safelinks.protection.outlook.com/?url=https%3A%2F%2Fwww.hydroone.com%2Fpoweroutagesandsafety_%2Fcorporatehealthandsafety_%2FEMFs%2FTransmission_Line_EMF_Fields.pdf&data=05%7C02%7CNRS-KRS%40aspeneg.com%7C65ac8d1d694941ea9a0708dc7e9f4905%7Cf56a45392d8e4b0d8454a64203aa39d3%7C0%7C0%7C638524470296586465%7CUnknown%7CTWFpbGZsb3d8eyJWIjoiMC4wLjAwMDAiLCJQIjoiV2luMzIiLCJBTiI6Ik1haWwiLCJXVCI6Mn0%3D%7C60000%7C%7C%7C&sdata=36ptUnPzB46U2Nah7T%2B6%2F7cZYWQN1WPBYMM2rlMMPoI%3D&reserved=0

https://nam02.safelinks.protection.outlook.com/?url=https%3A%2F%2Fwww.emrss.com%2Fblogs%2Femr-shielding-solutions-blogs%2Fwhat-are-safe-levels-of-emf&data=05%7C02%7CNRS-KRS%40aspeneg.com%7C65ac8d1d694941ea9a0708dc7e9f4905%7Cf56a45392d8e4b0d8454a64203aa39d3%7C0%7C0%7C638524470296589251%7CUnknown%7CTWFpbGZsb3d8eyJWIjoiMC4wLjAwMDAiLCJQIjoiV2luMzIiLCJBTiI6Ik1haWwiLCJXVCI6Mn0%3D%7C60000%7C%7C%7C&sdata=1emXJgEFqTxhmt04JtlhGsKYceMny9QmvWocwfduhjk%3D&reserved=0

As a quick overview from these please see below:

The magnetic field generated by the high power lines is way beyond safe levels for humans. Here is a break up:

· 115kV power transmission line has a Mean Magnetic Field (mG) of 6.5 at a distance of <50 feet.

· 230kV power transmission line has a Mean Magnetic Field (mG) of 19.5 at a distance of <50 feet. (ref. Link2)

As the project stands today, the first row of houses in Mission Gardens on Lafayette Street will be less than 50 feet from the proposed installation point per Route A of these poles.The safe value of magnetic field around humans is 0.7mg (ref. Link3) per numbers listed above, it's evident that residents in close proximity will be exposed to very high unsafe levels of EMF. This will have a significant impact to all the residents within 50-75 feet. As mentioned ,more reference to various NIH research articles on Pubmed can also be provided if needed to reinforce the concerns.

While I am speaking up as a resident of Mission Gardens, there are many other houses and apartment complexes along and near Lafayette St. whose residents will also be impacted by the unsafe levels of EMF.

Even a small risk is substantial for public health safety and can and should not be ignored by authorities; we need to err on the side of caution.

Increased Risk for Catastrophic Accidents and Fire Hazards: The proposed route intersects with an already congested utility zone along Lafayette Street, heightening the risk of accidents and fire hazards, especially given the proximity to existing railway lines, residential buildings, and heavy vehicular traffic.

Impact on Home Insurance Costs: The addition of high-power transmission lines in front of residences introduces additional risk factors that could prompt insurance companies to raise premiums further, exacerbating the already soaring home insurance costs in the Bay Area.

Property Value Concerns: The aesthetic and health-related concerns associated with the proposed power lines could adversely affect property values in our community, posing a significant concern for homeowners who have invested substantially in their properties.

Aesthetic Impact: The installation of large electric poles and wires would detract from the visual appeal of our neighborhood, undermining the pride we take in our well-maintained homes and attractive streetscapes.

Complexity and Inconvenience: The construction and maintenance of these power lines could disrupt our daily lives, leading to noise pollution, road closures, and restricted access to homes. Moreover, frequent power outages and service interruptions may result from ongoing maintenance activities.

Exploring Alternatives: We urge the city to explore alternative solutions such as upgrading existing lines or implementing underground power lines, despite potentially higher upfront costs. These alternatives offer long-term benefits in terms of safety, reliability, and minimal aesthetic impact. Additionally, investigating advanced technologies and alternative routing options could help mitigate the adverse effects on our community.

I respectfully request a meeting with relevant city officials and representatives from the utility company to discuss these concerns in detail and explore viable solutions. Finding a balance between necessary infrastructure upgrades and safeguarding the health, safety, and aesthetic integrity of our community is imperative.

As a concerned resident of Santa Clara, and a member of a community directly affected by this proposal, I strongly oppose the installation of power lines in options A and B. I implore Silicon Valley Power to consider alternative options that prioritize public health and safety and minimize adverse impacts on Santa Clara residents.

Thank you for your attention to this pressing matter. I eagerly await your response and the opportunity to collaborate on finding a satisfactory resolution.

Mehul Jain
2069 Garzoni Pl, Santa Clara, CA-95054
408-326-9386
Mission Gardens

Concerns Regarding Upcoming High Power Electric Wire Poles in Our Community(Mission Gardens) for the upcoming SVP project connecting the Northern Receiving Station NRS to Kifer receiving station (KRS).

Nikhil Mungre <nikhil.sm@gmail.com>

Mon 5/27/2024 4:53 PM

To:NRS-KRS Project <NRS-KRS@aspeneg.com>;mayorandcouncil@santaclaraca.gov <mayorandcouncil@santaclaraca.gov>; info@siliconvalleypower.com <info@siliconvalleypower.com>;planningcommission@santaclaraca.gov <planningcommission@santaclaraca.gov>;manager@santaclaraca.gov <manager@santaclaraca.gov>

To Whomsoever it may concern,

As a concerned resident of Santa Clara, I am writing to express our apprehensions regarding the proposed installation route for high-power electric transmission lines and poles by Silicon Valley Power (SVP). This initiative is part of the project aimed at connecting the Northern Receiving Station (NRS) and Kifer Receiving Station (KRS).

Having reviewed the materials provided by your office and attended the recent public scoping meeting on May 23, 2024, I have delved into the details of the project. After careful consideration, I must voice my complete opposition to options A and B.

While acknowledging the necessity of upgrading the city's power infrastructure, there are several significant concerns that demand attention:

Health Concerns: The potential health risks associated with prolonged exposure to unsafe levels of electromagnetic fields (EMFs) emitted by these high-power electric lines are paramount. Numerous studies have indicated a possible correlation between EMF exposure and various health issues, including heightened risks of certain cancers and neurological disorders, especially in children and the elderly. I have extensively researched this topic and found compelling evidence supporting these concerns. For instance, there is extensive research supporting that magnetic fields generated by the proposed power lines far exceed safe levels for human exposure, posing significant risks to residents, particularly those living within close proximity to the installation site.

Residents living in close proximity to these high power lines are at greater risk. I have gone through several medical and scientific research papers published on this matter that support our concern on this matter.
Here are a few links for reference to some such research articles:

https://www.ncbi.nlm.nih.gov/pmc/articles/PMC10590107/
https://www.hydroone.com/poweroutagesandsafety_/corporatehealthandsafety_/EMFs/Transmission_Line_EMF_Fields.pdf
https://www.emrss.com/blogs/emr-shielding-solutions-blogs/what-are-safe-levels-of-emf

As a quick overview from these please see below:

The magnetic field generated by the high power lines is way beyond safe levels for humans. Here is a break up:

- 115kV power transmission line has a Mean Magnetic Field (mG) of 6.5 at a distance of <50 feet.
- 230kV power transmission line has a Mean Magnetic Field (mG) of 19.5 at a distance of <50 feet. (ref. Link2)

As the project stands today, the first row of houses in Mission Gardens on Lafayette Street will be less than 50 feet from the proposed installation point per Route A of these poles.The safe value of magnetic field around humans is 0.7mg (ref. Link3) per numbers listed above, it's evident that residents in close proximity will be exposed to very high unsafe levels of EMF. This will have a significant impact to all the residents within 50-75 feet. As mentioned ,more reference to various NIH research articles on Pubmed can also be provided if needed to reinforce the concerns.

While I am speaking up as a resident of Mission Gardens, there are many other houses and apartment complexes along and near Lafayette St. whose residents will also be impacted by the unsafe levels of EMF.
Even a small risk is substantial for public health safety and can and should not be ignored by authorities; we need to err on the side of caution.

Increased Risk for Catastrophic Accidents and Fire Hazards: The proposed route intersects with an already congested utility zone along Lafayette Street, heightening the risk of accidents and fire hazards, especially given the proximity to existing railway lines, residential buildings, and heavy vehicular traffic.

Impact on Home Insurance Costs: The addition of high-power transmission lines in front of residences introduces additional risk factors that could prompt insurance companies to raise premiums further, exacerbating the already soaring home insurance costs in the Bay Area.

Property Value Concerns: The aesthetic and health-related concerns associated with the proposed power lines could adversely affect property values in our community, posing a significant concern for homeowners who have invested substantially in their properties.

Aesthetic Impact: The installation of large electric poles and wires would detract from the visual appeal of our neighborhood, undermining the pride we take in our well-maintained homes and attractive streetscapes.

Complexity and Inconvenience: The construction and maintenance of these power lines could disrupt our daily lives, leading to noise pollution, road closures, and restricted access to homes. Moreover, frequent power outages and service interruptions may result from ongoing maintenance activities.

Exploring Alternatives: We urge the city to explore alternative solutions such as upgrading existing lines or implementing underground power lines, despite potentially higher upfront costs. These alternatives offer long-term benefits in terms of safety, reliability, and minimal aesthetic impact. Additionally, investigating advanced technologies and alternative routing options could help mitigate the adverse effects on our community.

I respectfully request a meeting with relevant city officials and representatives from the utility company to discuss these concerns in detail and explore viable solutions. Finding a balance between necessary infrastructure upgrades and safeguarding the health, safety, and aesthetic integrity of our community is imperative.

As a concerned resident of Santa Clara, and a member of a community directly affected by this proposal, I strongly oppose the installation of power lines in options A and B. I implore Silicon Valley Power to consider alternative options that prioritize public health and safety and minimize adverse impacts on Santa Clara residents.

Thank you for your attention to this pressing matter. I eagerly await your response and the opportunity to collaborate on finding a satisfactory resolution.

Nikhil Mungre

1913 Silva Pl, Santa Clara

770-363-3850

Resident of Mission Gardens Community

Fwd: Concerns Regarding Upcoming High Power Electric Wire Poles in Our Community(Mission Gardens) for the upcoming SVP project connecting the Northern Receiving Station NRS to Kifer receiving station (KRS)

derek fong <dfong87@gmail.com>

Mon 5/27/2024 5:15 PM

To:NRS-KRS Project <NRS-KRS@aspeneg.com>;info@siliconvalleypower.com <info@siliconvalleypower.com>

To Whom it may concern,

As a concerned resident of Santa Clara, I am writing to express our apprehensions regarding the proposed installation route for high-power electric transmission lines and poles by Silicon Valley Power (SVP). This initiative is part of the project aimed at connecting the Northern Receiving Station (NRS) and Kifer Receiving Station (KRS).

Having reviewed the materials provided by your office and attended the recent public scoping meeting on May 23, 2024, I have delved into the details of the project. After careful consideration, I must voice my complete opposition to options A and B.

While acknowledging the necessity of upgrading the city's power infrastructure, there are several significant concerns that demand attention:

1. **Health Concerns**: The potential health risks associated with prolonged exposure to unsafe levels of electromagnetic fields (EMFs) emitted by these high-power electric lines are paramount. Numerous studies have indicated a possible correlation between EMF exposure and various health issues, including heightened risks of certain cancers and neurological disorders, especially in children and the elderly. I have extensively researched this topic and found compelling evidence supporting these concerns. For instance, there is extensive research supporting that magnetic fields generated by the proposed power lines far exceed safe levels for human exposure, posing significant risks to residents, particularly those living within close proximity to the installation site.

   Residents living in close proximity to these high power lines are at greater risk. I have gone through several medical and scientific research papers published on this matter that support our concern on this matter.
   Here are a few links for reference to some such research articles:

- https://www.ncbi.nlm.nih.gov/pmc/articles/PMC10590107/
- https://www.hydroone.com/poweroutagesandsafety_/corporatehealthandsafety_/EMFs/Transmission_Line_EMF_Fields.pdf
- https://www.emrss.com/blogs/emr-shielding-solutions-blogs/what-are-safe-levels-of-emf

   As a quick overview from these please see below:

   The magnetic field generated by the high power lines is way beyond safe levels for humans. Here is a break up:
   - 115kV power transmission line has a Mean Magnetic Field (mG) of 6.5 at a distance of <50 feet.
   - 230kV power transmission line has a Mean Magnetic Field (mG) of 19.5 at a distance of <50 feet. (ref. Link2)

   As the project stands today, the first row of houses in Mission Gardens on Lafayette Street will be less than 50 feet from the proposed installation point per Route A of these poles.The safe value of magnetic field around humans is 0.7mg (ref. Link3) per numbers listed above, it's evident that residents in close proximity will be exposed to very high unsafe levels of EMF. This will have a significant impact to all the residents within 50-75 feet. As mentioned ,more reference to various NIH research articles on Pubmed can also be provided if needed to reinforce the concerns.

   While I am speaking up as a resident of Mission Gardens, there are many other houses and apartment complexes along and near Lafayette St. whose residents will also be impacted by the unsafe levels of EMF.
   Even a small risk is substantial for public health safety and can and should not be ignored by authorities; we need to err on the side of caution.

2. **Increased Risk for Catastrophic Accidents and Fire Hazards**: The proposed route intersects with an already congested utility zone along Lafayette Street, heightening the risk of accidents and fire hazards, especially given the proximity to existing railway lines, residential buildings, and heavy vehicular traffic.
3. **Impact on Home Insurance Costs**: The addition of high-power transmission lines in front of residences introduces additional risk factors that could prompt insurance companies to raise premiums further, exacerbating the already soaring home insurance costs in the Bay Area.
4. **Property Value Concerns**: The aesthetic and health-related concerns associated with the proposed power lines could adversely affect property values in our community, posing a significant concern for homeowners who have invested substantially in their

properties.

5. **Aesthetic Impact**: The installation of large electric poles and wires would detract from the visual appeal of our neighborhood, undermining the pride we take in our well-maintained homes and attractive streetscapes.
6. **Complexity and Inconvenience**: The construction and maintenance of these power lines could disrupt our daily lives, leading to noise pollution, road closures, and restricted access to homes. Moreover, frequent power outages and service interruptions may result from ongoing maintenance activities.
7. **Exploring Alternatives**: We urge the city to explore alternative solutions such as upgrading existing lines or implementing underground power lines, despite potentially higher upfront costs. These alternatives offer long-term benefits in terms of safety, reliability, and minimal aesthetic impact. Additionally, investigating advanced technologies and alternative routing options could help mitigate the adverse effects on our community.

I respectfully request a meeting with relevant city officials and representatives from the utility company to discuss these concerns in detail and explore viable solutions. Finding a balance between necessary infrastructure upgrades and safeguarding the health, safety, and aesthetic integrity of our community is imperative.

As a concerned resident of Santa Clara, and a member of a community directly affected by this proposal, I strongly oppose the installation of power lines in options A and B. I implore Silicon Valley Power to consider alternative options that prioritize public health and safety and minimize adverse impacts on Santa Clara residents.

Thank you for your attention to this pressing matter. I eagerly await your response and the opportunity to collaborate on finding a satisfactory resolution.

Sincerely,

Derek Fong

1922 Garzoni Pl

Santa Clara, CA 95054

Mission Gardens of Santa Clara HOA

Concerns Regarding Upcoming High Power Electric Wire Poles in Our Community(Mission Gardens) for the upcoming SVP project connecting the Northern Receiving Station NRS to Kifer receiving station (KRS).

Suneet Bisht <suneet.bisht@gmail.com>

Mon 5/27/2024 6:46 PM

To:NRS-KRS Project <NRS-KRS@aspeneg.com>;mayorandcouncil@santaclaraca.gov <mayorandcouncil@santaclaraca.gov>; info@siliconvalleypower.com <info@siliconvalleypower.com>;planningcommission@santaclaraca.gov <planningcommission@santaclaraca.gov>;manager@santaclaraca.gov <manager@santaclaraca.gov>

To Whomsoever it may concern,

As a concerned resident of Santa Clara, I am writing to express our apprehensions regarding the proposed installation route for high-power electric transmission lines and poles by Silicon Valley Power (SVP). This initiative is part of the project aimed at connecting the Northern Receiving Station (NRS) and Kifer Receiving Station (KRS).

Having reviewed the materials provided by your office and attended the recent public scoping meeting on May 23, 2024, I have delved into the details of the project. After careful consideration, I must voice my complete opposition to options A and B.

While acknowledging the necessity of upgrading the city's power infrastructure, there are several significant concerns that demand attention:

1. **Health Concerns**: The potential health risks associated with prolonged exposure to unsafe levels of electromagnetic fields (EMFs) emitted by these high-power electric lines are paramount. Numerous studies have indicated a possible correlation between EMF exposure and various health issues, including heightened risks of certain cancers and neurological disorders, especially in children and the elderly. I have extensively researched this topic and found compelling evidence supporting these concerns. For instance, there is extensive research supporting that magnetic fields generated by the proposed power lines far exceed safe levels for human exposure, posing significant risks to residents, particularly those living within close proximity to the installation site.

   Residents living in close proximity to these high power lines are at greater risk. I have gone through several medical and scientific research papers published on this matter that support our concern on this matter.
   Here are a few links for reference to some such research articles:

- https://www.ncbi.nlm.nih.gov/pmc/articles/PMC10590107/
- https://www.hydroone.com/poweroutagesandsafety_/corporatehealthandsafety_/EMFs/Transmission_Line_EMF_Fields.pdf
- https://www.emrss.com/blogs/emr-shielding-solutions-blogs/what-are-safe-levels-of-emf

   As a quick overview from these please see below:

   The magnetic field generated by the high power lines is way beyond safe levels for humans. Here is a break up:

   - 115kV power transmission line has a Mean Magnetic Field (mG) of 6.5 at a distance of <50 feet.

- 230kV power transmission line has a Mean Magnetic Field (mG) of 19.5 at a distance of <50 feet. (ref. Link2)

As the project stands today, the first row of houses in Mission Gardens on Lafayette Street will be less than 50 feet from the proposed installation point per Route A of these poles.The safe value of magnetic field around humans is 0.7mg (ref. Link3) per numbers listed above, it's evident that residents in close proximity will be exposed to very high unsafe levels of EMF. This will have a significant impact to all the residents within 50-75 feet. As mentioned ,more reference to various NIH research articles on Pubmed can also be provided if needed to reinforce the concerns.

While I am speaking up as a resident of Mission Gardens, there are many other houses and apartment complexes along and near Lafayette St. whose residents will also be impacted by the unsafe levels of EMF.
Even a small risk is substantial for public health safety and can and should not be ignored by authorities; we need to err on the side of caution.

2. **Increased Risk for Catastrophic Accidents and Fire Hazards**: The proposed route intersects with an already congested utility zone along Lafayette Street, heightening the risk of accidents and fire hazards, especially given the proximity to existing railway lines, residential buildings, and heavy vehicular traffic.
3. **Impact on Home Insurance Costs**: The addition of high-power transmission lines in front of residences introduces additional risk factors that could prompt insurance companies to raise premiums further, exacerbating the already soaring home insurance costs in the Bay Area.
4. **Property Value Concerns**: The aesthetic and health-related concerns associated with the proposed power lines could adversely affect property values in our community, posing a significant concern for homeowners who have invested substantially in their properties.
5. **Aesthetic Impact**: The installation of large electric poles and wires would detract from the visual appeal of our neighborhood, undermining the pride we take in our well-maintained homes and attractive streetscapes.
6. **Complexity and Inconvenience**: The construction and maintenance of these power lines could disrupt our daily lives, leading to noise pollution, road closures, and restricted access to homes. Moreover, frequent power outages and service interruptions may result from ongoing maintenance activities.
7. **Exploring Alternatives**: We urge the city to explore alternative solutions such as upgrading existing lines or implementing underground power lines, despite potentially higher upfront costs. These alternatives offer long-term benefits in terms of safety, reliability, and minimal aesthetic impact. Additionally, investigating advanced technologies and alternative routing options could help mitigate the adverse effects on our community.

I respectfully request a meeting with relevant city officials and representatives from the utility company to discuss these concerns in detail and explore viable solutions. Finding a balance between necessary infrastructure upgrades and safeguarding the health, safety, and aesthetic integrity of our community is imperative.

As a concerned resident of Santa Clara, and a member of a community directly affected by this proposal, I strongly oppose the installation of power lines in options A and B. I implore Silicon Valley Power to consider alternative options that prioritize public health and safety and minimize adverse impacts on Santa Clara residents.

Thank you for your attention to this pressing matter. I eagerly await your response and the opportunity to collaborate on finding a satisfactory resolution.

Suneet Bisht
Mission Gardens,
4494 Moulin Pl
Santa Clara, CA 95054
suneet.bisht@gmail.com

Concerns Regarding Upcoming High Power Electric Wire Poles in Our Community(Mission Gardens) for the upcoming SVP project connecting the Northern Receiving Station NRS to Kifer receiving station (KRS).

Ruchika Sarna <ruchikasarna@gmail.com>

Mon 5/27/2024 6:48 PM

To:NRS-KRS Project <NRS-KRS@aspeneg.com>;mayorandcouncil@santaclaraca.gov <mayorandcouncil@santaclaraca.gov>; info@siliconvalleypower.com <info@siliconvalleypower.com>;planningcommission@santaclaraca.gov <planningcommission@santaclaraca.gov>;manager@santaclaraca.gov <manager@santaclaraca.gov>

To Whomsoever it may concern,

As a concerned resident of Santa Clara, I am writing to express our apprehensions regarding the proposed installation route for high-power electric transmission lines and poles by Silicon Valley Power (SVP). This initiative is part of the project aimed at connecting the Northern Receiving Station (NRS) and Kifer Receiving Station (KRS).

Having reviewed the materials provided by your office and attended the recent public scoping meeting on May 23, 2024, I have delved into the details of the project. After careful consideration, I must voice my complete opposition to options A and B.

While acknowledging the necessity of upgrading the city's power infrastructure, there are several significant concerns that demand attention:

1. **Health Concerns**: The potential health risks associated with prolonged exposure to unsafe levels of electromagnetic fields (EMFs) emitted by these high-power electric lines are paramount. Numerous studies have indicated a possible correlation between EMF exposure and various health issues, including heightened risks of certain cancers and neurological disorders, especially in children and the elderly. I have extensively researched this topic and found compelling evidence supporting these concerns. For instance, there is extensive research supporting that magnetic fields generated by the proposed power lines far exceed safe levels for human exposure, posing significant risks to residents, particularly those living within close proximity to the installation site.

   Residents living in close proximity to these high power lines are at greater risk. I have gone through several medical and scientific research papers published on this matter that support our concern on this matter.
   Here are a few links for reference to some such research articles:

- https://www.ncbi.nlm.nih.gov/pmc/articles/PMC10590107/
- https://www.hydroone.com/poweroutagesandsafety_/corporatehealthandsafety_/EMFs/Transmission_Line_EMF_Fields.pdf
- https://www.emrss.com/blogs/emr-shielding-solutions-blogs/what-are-safe-levels-of-emf

   As a quick overview from these please see below:

   The magnetic field generated by the high power lines is way beyond safe levels for humans. Here is a break up:

   - 115kV power transmission line has a Mean Magnetic Field (mG) of 6.5 at a distance of <50 feet.

- 230kV power transmission line has a Mean Magnetic Field (mG) of 19.5 at a distance of <50 feet. (ref. Link2)

As the project stands today, the first row of houses in Mission Gardens on Lafayette Street will be less than 50 feet from the proposed installation point per Route A of these poles.The safe value of magnetic field around humans is 0.7mg (ref. Link3) per numbers listed above, it's evident that residents in close proximity will be exposed to very high unsafe levels of EMF. This will have a significant impact to all the residents within 50-75 feet. As mentioned ,more reference to various NIH research articles on Pubmed can also be provided if needed to reinforce the concerns.

While I am speaking up as a resident of Mission Gardens, there are many other houses and apartment complexes along and near Lafayette St. whose residents will also be impacted by the unsafe levels of EMF.
Even a small risk is substantial for public health safety and can and should not be ignored by authorities; we need to err on the side of caution.

2. **Increased Risk for Catastrophic Accidents and Fire Hazards**: The proposed route intersects with an already congested utility zone along Lafayette Street, heightening the risk of accidents and fire hazards, especially given the proximity to existing railway lines, residential buildings, and heavy vehicular traffic.
3. **Impact on Home Insurance Costs**: The addition of high-power transmission lines in front of residences introduces additional risk factors that could prompt insurance companies to raise premiums further, exacerbating the already soaring home insurance costs in the Bay Area.
4. **Property Value Concerns**: The aesthetic and health-related concerns associated with the proposed power lines could adversely affect property values in our community, posing a significant concern for homeowners who have invested substantially in their properties.
5. **Aesthetic Impact**: The installation of large electric poles and wires would detract from the visual appeal of our neighborhood, undermining the pride we take in our well-maintained homes and attractive streetscapes.
6. **Complexity and Inconvenience**: The construction and maintenance of these power lines could disrupt our daily lives, leading to noise pollution, road closures, and restricted access to homes. Moreover, frequent power outages and service interruptions may result from ongoing maintenance activities.
7. **Exploring Alternatives**: We urge the city to explore alternative solutions such as upgrading existing lines or implementing underground power lines, despite potentially higher upfront costs. These alternatives offer long-term benefits in terms of safety, reliability, and minimal aesthetic impact. Additionally, investigating advanced technologies and alternative routing options could help mitigate the adverse effects on our community.

I respectfully request a meeting with relevant city officials and representatives from the utility company to discuss these concerns in detail and explore viable solutions. Finding a balance between necessary infrastructure upgrades and safeguarding the health, safety, and aesthetic integrity of our community is imperative.

As a concerned resident of Santa Clara, and a member of a community directly affected by this proposal, I strongly oppose the installation of power lines in options A and B. I implore Silicon Valley Power to consider alternative options that prioritize public health and safety and minimize adverse impacts on Santa Clara residents.

Thank you for your attention to this pressing matter. I eagerly await your response and the opportunity to collaborate on finding a satisfactory resolution.

Ruchika Sarna
Mission Gardens,
4494 Moulin Pl
Santa Clara, CA 95054
ruchikasarna@gmail.com

Concerns Regarding Upcoming High Power Electric Wire Poles in Our Community(Mission Gardens) for the upcoming SVP project connecting the Northern Receiving Station NRS to Kifer receiving station (KRS).

vijay srinivasan <vsriniva@gmail.com>

Mon 5/27/2024 10:16 PM

To:NRS-KRS Project <NRS-KRS@aspeneg.com>;mayorandcouncil@santaclaraca.gov <mayorandcouncil@santaclaraca.gov>;info@siliconvalleypower.com <info@siliconvalleypower.com>; planningcommission@santaclaraca.gov <planningcommission@santaclaraca.gov>;manager@santaclaraca.gov <manager@santaclaraca.gov>

Dear Santa Clara City leaders,

As a concerned resident of Santa Clara, I am writing to express our apprehensions regarding the proposed installation route for high-power electric transmission lines and poles by Silicon Valley Power (SVP). This initiative is part of the project aimed at connecting the Northern Receiving Station (NRS) and Kifer Receiving Station (KRS).

Having reviewed the materials provided by your office and attended the recent public scoping meeting on May 23, 2024, I have delved into the details of the project. After careful consideration, I must voice my complete opposition to options A and B.

While acknowledging the necessity of upgrading the city's power infrastructure, there are several significant concerns that demand attention:

1. **Health Concerns**: The potential health risks associated with prolonged exposure to unsafe levels of electromagnetic fields (EMFs) emitted by these high-power

   Residents living in close proximity to these high power lines are at greater risk. I have gone through several medical and scientific research papers published on this matter that support our concern on this matter.
   Here are a few links for reference to some such research articles:

- https://www.ncbi.nlm.nih.gov/pmc/articles/PMC10590107/
- https://www.hydroone.com/poweroutagesandsafety_/corporatehealthandsafety_/EMFs/Transmission_Line_EMF_Fields.pdf
- https://www.emrss.com/blogs/emr-shielding-solutions-blogs/what-are-safe-levels-of-emf

   As a quick overview from these please see below:

   The magnetic field generated by the high power lines is way beyond safe levels for humans. Here is a break up:
   - 115kV power transmission line has a Mean Magnetic Field (mG) of 6.5 at a distance of <50 feet.
   - 230kV power transmission line has a Mean Magnetic Field (mG) of 19.5 at a distance of <50 feet. (ref. Link2)

   As the project stands today, the first row of houses in Mission Gardens on Lafayette Street will be less than 50 feet from the proposed installation point per Route A of these poles.The safe value of magnetic field around humans is 0.7mg (ref. Link3) per numbers listed above, it's evident that residents in close proximity will be exposed to very high unsafe levels of EMF. This will have a significant impact to all the residents within 50-75 feet. As mentioned ,more reference to various NIH research articles on Pubmed can also be provided if needed to reinforce the concerns.

   While I am speaking up as a resident of Mission Gardens, there are many other houses and apartment complexes along and near Lafayette St. whose residents will also be impacted by the unsafe levels of EMF.
   Even a small risk is substantial for public health safety and can and should not be ignored by authorities; we need to err on the side of caution.

2. **Increased Risk for Catastrophic Accidents and Fire Hazards**: The proposed route intersects with an already congested utility zone along Lafayette Street, he
3. **Impact on Home Insurance Costs**: The addition of high-power transmission lines in front of residences introduces additional risk factors that could prompt insu
4. **Property Value Concerns**: The aesthetic and health-related concerns associated with the proposed power lines could adversely affect property values in our co
5. **Aesthetic Impact**: The installation of large electric poles and wires would detract from the visual appeal of our neighborhood, undermining the pride we take in c
6. **Complexity and Inconvenience**: The construction and maintenance of these power lines could disrupt our daily lives, leading to noise pollution, road closures,
7. **Exploring Alternatives**: We urge the city to explore alternative solutions such as upgrading existing lines or implementing underground power lines, despite pot

I respectfully request a meeting with relevant city officials and representatives from the utility company to discuss these concerns in detail and explore viable solutions. Finding a balance between necessary infrastructure upgrades and safeguarding the health, safety, and aesthetic integrity of our community is imperative.

As a concerned resident of Santa Clara, and a member of a community directly affected by this proposal, I strongly oppose the installation of power lines in options A and B. I implore Silicon Valley Power to consider alternative options that prioritize public health and safety and minimize adverse impacts on Santa Clara residents.

Thank you for your attention to this pressing matter. I eagerly await your response and the opportunity to collaborate on finding a satisfactory resolution.

Sincerely

vijay srinivasan

1881 Garzoni place

Santa Clara, CA, 95054
Phone: 4087316346
Mission Gardens townhome community

Concerns Regarding Upcoming High Power Electric Wire Poles in Our Community (Mission Gardens) for the upcoming SVP project connecting the Northern Receiving Station (NRS) to Kifer receiving station (KRS).

Adnan Hemani <adnan.h@berkeley.edu>

Mon 5/27/2024 10:17 PM

To:NRS-KRS Project <NRS-KRS@aspeneg.com>;mayorandcouncil@santaclaraca.gov <mayorandcouncil@santaclaraca.gov>; info@siliconvalleypower.com <info@siliconvalleypower.com>;planningcommission@santaclaraca.gov <planningcommission@santaclaraca.gov>;manager@santaclaraca.gov <manager@santaclaraca.gov>

To Whomsoever it may concern,

As a concerned resident of Santa Clara, I am writing to express our apprehensions regarding the proposed installation route for high-power electric transmission lines and poles by Silicon Valley Power (SVP). This initiative is part of the project aimed at connecting the Northern Receiving Station (NRS) and Kifer Receiving Station (KRS).

Having reviewed the materials provided by your office and attended the recent public scoping meeting on May 23, 2024, I have delved into the details of the project. After careful consideration, I must voice my complete opposition to options A and B.

While acknowledging the necessity of upgrading the city's power infrastructure, there are several significant concerns that demand attention:

1. **Health Concerns**: The potential health risks associated with prolonged exposure to unsafe levels of electromagnetic fields (EMFs) emitted by these high-power electric lines are paramount. Numerous studies have indicated a possible correlation between EMF exposure and various health issues, including heightened risks of certain cancers and neurological disorders, especially in children and the elderly. I have extensively researched this topic and found compelling evidence supporting these concerns. For instance, there is extensive research supporting that magnetic fields generated by the proposed power lines far exceed safe levels for human exposure, posing significant risks to residents, particularly those living within close proximity to the installation site.

   Residents living in close proximity to these high power lines are at greater risk. I have gone through several medical and scientific research papers published on this matter that support our concern on this matter.
   Here are a few links for reference to some such research articles:

- https://www.ncbi.nlm.nih.gov/pmc/articles/PMC10590107/
- https://www.hydroone.com/poweroutagesandsafety_/corporatehealthandsafety_/EMFs/Transmission_Line_EMF_Fields.pdf
- https://www.emrss.com/blogs/emr-shielding-solutions-blogs/what-are-safe-levels-of-emf

   As a quick overview from these please see below:

   The magnetic field generated by the high power lines is way beyond safe levels for humans. Here is a break up:

   - 115kV power transmission line has a Mean Magnetic Field (mG) of 6.5 at a distance of <50 feet.

- 230kV power transmission line has a Mean Magnetic Field (mG) of 19.5 at a distance of <50 feet. (ref. Link2)

As the project stands today, the first row of houses in Mission Gardens on Lafayette Street will be less than 50 feet from the proposed installation point per Route A of these poles.The safe value of magnetic field around humans is 0.7mg (ref. Link3) per numbers listed above, it's evident that residents in close proximity will be exposed to very high unsafe levels of EMF. This will have a significant impact to all the residents within 50-75 feet. As mentioned ,more reference to various NIH research articles on Pubmed can also be provided if needed to reinforce the concerns.

While I am speaking up as a resident of Mission Gardens, there are many other houses and apartment complexes along and near Lafayette St. whose residents will also be impacted by the unsafe levels of EMF.
Even a small risk is substantial for public health safety and can and should not be ignored by authorities; we need to err on the side of caution.

2. **Increased Risk for Catastrophic Accidents and Fire Hazards**: The proposed route intersects with an already congested utility zone along Lafayette Street, heightening the risk of accidents and fire hazards, especially given the proximity to existing railway lines, residential buildings, and heavy vehicular traffic.
3. **Impact on Home Insurance Costs**: The addition of high-power transmission lines in front of residences introduces additional risk factors that could prompt insurance companies to raise premiums further, exacerbating the already soaring home insurance costs in the Bay Area.
4. **Property Value Concerns**: The aesthetic and health-related concerns associated with the proposed power lines could adversely affect property values in our community, posing a significant concern for homeowners who have invested substantially in their properties.
5. **Aesthetic Impact**: The installation of large electric poles and wires would detract from the visual appeal of our neighborhood, undermining the pride we take in our well-maintained homes and attractive streetscapes.
6. **Complexity and Inconvenience**: The construction and maintenance of these power lines could disrupt our daily lives, leading to noise pollution, road closures, and restricted access to homes. Moreover, frequent power outages and service interruptions may result from ongoing maintenance activities.
7. **Exploring Alternatives**: We urge the city to explore alternative solutions such as upgrading existing lines or implementing underground power lines, despite potentially higher upfront costs. These alternatives offer long-term benefits in terms of safety, reliability, and minimal aesthetic impact. Additionally, investigating advanced technologies and alternative routing options could help mitigate the adverse effects on our community.

Finding a balance between necessary infrastructure upgrades and safeguarding the health, safety, and aesthetic integrity of our community is imperative.

As a concerned resident of Santa Clara, and a member of a community directly affected by this proposal, I strongly oppose the installation of power lines in options A and B. I implore Silicon Valley Power to consider alternative options that prioritize public health and safety and minimize adverse impacts on Santa Clara residents.

Thank you for your attention to this pressing matter. I eagerly await your response and the opportunity to collaborate on finding a satisfactory resolution.

Adnan Hemani
1822 Garzoni Pl, Santa Clara, CA 95054
512-831-9968
Mission Gardens (located near Hope Dr. and Lafayette St.)

Concerns Regarding Upcoming High Power Electric Wire Poles in Our Community(Mission Gardens) for the upcoming SVP project connecting the Northern Receiving Station NRS to Kifer receiving station (KRS).

Amit Chandak <amit.chandak@gmail.com>

Mon 5/27/2024 10:21 PM

To:NRS-KRS Project <NRS-KRS@aspeneg.com>;mayorandcouncil@santaclaraca.gov <mayorandcouncil@santaclaraca.gov>;info@siliconvalleypower.com <info@siliconvalleypower.com>; planningcommission@santaclaraca.gov <planningcommission@santaclaraca.gov>;manager@santaclaraca.gov <manager@santaclaraca.gov>

To Whomsoever it may concern,

As a concerned resident of Santa Clara, I am writing to express our apprehensions regarding the proposed installation route for high-power electric transmission lines and poles by Silicon Valley Power (SVP). This initiative is part of the project aimed at connecting the Northern Receiving Station (NRS) and Kifer Receiving Station (KRS).

Having reviewed the materials provided by your office and attended the recent public scoping meeting on May 23, 2024, I have delved into the details of the project. After careful consideration, I must voice my complete opposition to options A and B.

While acknowledging the necessity of upgrading the city's power infrastructure, there are several significant concerns that demand attention:

1. **Health Concerns**: The potential health risks associated with prolonged exposure to unsafe levels of electromagnetic fields (EMFs) emitted by these high-power

   Residents living in close proximity to these high power lines are at greater risk. I have gone through several medical and scientific research papers published on this matter that support our concern on this matter.
   Here are a few links for reference to some such research articles:

- https://www.ncbi.nlm.nih.gov/pmc/articles/PMC10590107/
- https://www.hydroone.com/poweroutagesandsafety_/corporatehealthandsafety_/EMFs/Transmission_Line_EMF_Fields.pdf
- https://www.emrss.com/blogs/emr-shielding-solutions-blogs/what-are-safe-levels-of-emf

   As a quick overview from these please see below:

   The magnetic field generated by the high power lines is way beyond safe levels for humans. Here is a break up:
   - 115kV power transmission line has a Mean Magnetic Field (mG) of 6.5 at a distance of <50 feet.
   - 230kV power transmission line has a Mean Magnetic Field (mG) of 19.5 at a distance of <50 feet. (ref. Link2)

   As the project stands today, the first row of houses in Mission Gardens on Lafayette Street will be less than 50 feet from the proposed installation point per Route A of these poles.The safe value of magnetic field around humans is 0.7mg (ref. Link3) per numbers listed above, it's evident that residents in close proximity will be exposed to very high unsafe levels of EMF. This will have a significant impact to all the residents within 50-75 feet. As mentioned ,more reference to various NIH research articles on Pubmed can also be provided if needed to reinforce the concerns.

   While I am speaking up as a resident of Mission Gardens, there are many other houses and apartment complexes along and near Lafayette St. whose residents will also be impacted by the unsafe levels of EMF.
   Even a small risk is substantial for public health safety and can and should not be ignored by authorities; we need to err on the side of caution.

2. **Increased Risk for Catastrophic Accidents and Fire Hazards**: The proposed route intersects with an already congested utility zone along Lafayette Street, he
3. **Impact on Home Insurance Costs**: The addition of high-power transmission lines in front of residences introduces additional risk factors that could prompt insu
4. **Property Value Concerns**: The aesthetic and health-related concerns associated with the proposed power lines could adversely affect property values in our co
5. **Aesthetic Impact**: The installation of large electric poles and wires would detract from the visual appeal of our neighborhood, undermining the pride we take in c
6. **Complexity and Inconvenience**: The construction and maintenance of these power lines could disrupt our daily lives, leading to noise pollution, road closures,
7. **Exploring Alternatives**: We urge the city to explore alternative solutions such as upgrading existing lines or implementing underground power lines, despite pot

I respectfully request a meeting with relevant city officials and representatives from the utility company to discuss these concerns in detail and explore viable solutions. Finding a balance between necessary infrastructure upgrades and safeguarding the health, safety, and aesthetic integrity of our community is imperative.

As a concerned resident of Santa Clara, and a member of a community directly affected by this proposal, I strongly oppose the installation of power lines in options A and B. I implore Silicon Valley Power to consider alternative options that prioritize public health and safety and minimize adverse impacts on Santa Clara residents.

Thank you for your attention to this pressing matter. I eagerly await your response and the opportunity to collaborate on finding a satisfactory resolution.

Amit Chandak
2029 Garzoni Pl, Santa Clara, CA 95054
4084313013
Mission Gardens

Concerns Regarding Upcoming High Power Electric Wire Poles in Our Community(Mission Gardens) for the upcoming SVP project connecting the Northern Receiving Station NRS to Kifer receiving station (KRS)

saurabh sharma <tosaurabhsharma@gmail.com>

Tue 5/28/2024 2:02 AM

To:mayorandcouncil@santaclaraca.gov <mayorandcouncil@santaclaraca.gov>;NRS-KRS Project <NRS-KRS@aspeneg.com>;info@siliconvalleypower.com <info@siliconvalleypower.com>; planningcommission@santaclaraca.gov <planningcommission@santaclaraca.gov>;manager@santaclaraca.gov <manager@santaclaraca.gov>
Cc:planningcommision@santaclara.gov <planningcommision@santaclara.gov>;dehweb@deh.sccgov.org <dehweb@deh.sccgov.org>;phinternet@phd.sccgov.org <phinternet@phd.sccgov.org>

1 attachments (469 KB)

Transmission_Line_EMF_Fields.pdf;

To Whomsoever it may concern,

As a concerned resident of Santa Clara, I am writing to express our apprehensions regarding the proposed installation route for high-power electric transmission lines and poles by Silicon Valley Power (SVP). This initiative is part of the project aimed at connecting the Northern Receiving Station (NRS) and Kifer Receiving Station (KRS).

Having reviewed the materials provided by your office and attended the recent public scoping meeting on May 23, 2024, I have delved into the details of the project. After careful consideration, I must voice my complete opposition to options A and B.

While acknowledging the necessity of upgrading the city's power infrastructure, there are several significant concerns that demand attention:

1. **Health Concerns**: The potential health risks associated with prolonged exposure to unsafe levels of electromagnetic fields (EMFs) emitted by these high-power

   Residents living in close proximity to these high power lines are at greater risk. I have gone through several medical and scientific research papers published on this matter that support our concern on this matter.
   Here are a few links for reference to some such research articles:

- https://www.ncbi.nlm.nih.gov/pmc/articles/PMC10590107/
- https://www.hydroone.com/poweroutagesandsafety_/corporatehealthandsafety_/EMFs/Transmission_Line_EMF_Fields.pdf
- https://www.emrss.com/blogs/emr-shielding-solutions-blogs/what-are-safe-levels-of-emf

   As a quick overview from these please see below:

   The magnetic field generated by the high power lines is way beyond safe levels for humans. Here is a break up:
   - 115kV power transmission line has a Mean Magnetic Field (mG) of 6.5 at a distance of <50 feet.
   - 230kV power transmission line has a Mean Magnetic Field (mG) of 19.5 at a distance of <50 feet. (ref. Link2)

   As the project stands today, the first row of houses in Mission Gardens on Lafayette Street will be less than 50 feet from the proposed installation point per Route A of these poles.The safe value of magnetic field around humans is 0.7mg (ref. Link3) per numbers listed above, it's evident that residents in close proximity will be exposed to very high unsafe levels of EMF. This will have a significant impact to all the residents within 50-75 feet. As mentioned ,more reference to various NIH research articles on Pubmed can also be provided if needed to reinforce the concerns.

   While I am speaking up as a resident of Mission Gardens, there are many other houses and apartment complexes along and near Lafayette St. whose residents will also be impacted by the unsafe levels of EMF.
   Even a small risk is substantial for public health safety and can and should not be ignored by authorities; we need to err on the side of caution.

2. **Increased Risk for Catastrophic Accidents and Fire Hazards**: The proposed route intersects with an already congested utility zone along Lafayette Street, he
3. **Impact on Home Insurance Costs**: The addition of high-power transmission lines in front of residences introduces additional risk factors that could prompt insu
4. **Property Value Concerns**: The aesthetic and health-related concerns associated with the proposed power lines could adversely affect property values in our co
5. **Aesthetic Impact**: The installation of large electric poles and wires would detract from the visual appeal of our neighborhood, undermining the pride we take in c
6. **Complexity and Inconvenience**: The construction and maintenance of these power lines could disrupt our daily lives, leading to noise pollution, road closures,
7. **Exploring Alternatives**: We urge the city to explore alternative solutions such as upgrading existing lines or implementing underground power lines, despite pot

I respectfully request a meeting with relevant city officials and representatives from the utility company to discuss these concerns in detail and explore viable solutions. Finding a balance between necessary infrastructure upgrades and safeguarding the health, safety, and aesthetic integrity of our community is imperative.

As a concerned resident of Santa Clara, and a member of a community directly affected by this proposal, I strongly oppose the installation of power lines in options A and B. I implore Silicon Valley Power to consider alternative options that prioritize public health and safety and minimize adverse impacts on Santa Clara residents.

Thank you for your attention to this pressing matter. I eagerly await your response and the opportunity to collaborate on finding a satisfactory resolution.

Sincerely,
Saurabh Sharma
Address: 4478 Moulin Pl, Santa Clara, CA 95054 Community Name: Mission Gardens, Santa Clara
Mob: 408-636-8031

Concerns Regarding Upcoming High Power Electric Wire Poles in Our Community(Mission Gardens) for the upcoming SVP project connecting the Northern Receiving Station NRS to Kifer receiving station (KRS)

Pratima Hans <pratima.hans@gmail.com>

Tue 5/28/2024 3:57 AM

To:NRS-KRS Project <NRS-KRS@aspeneg.com>;info@siliconvalleypower.com <info@siliconvalleypower.com>; manager@santaclaraca.gov <manager@santaclaraca.gov>;mayorandcouncil@santaclaraca.gov <mayorandcouncil@santaclaraca.gov>;planningcommission@santaclaraca.gov <planningcommission@santaclaraca.gov>
Cc:dehweb@deh.sccgov.org <dehweb@deh.sccgov.org>;phinternet@phd.sccgov.org <phinternet@phd.sccgov.org>; planningcommision@santaclara.gov <planningcommision@santaclara.gov>

1 attachments (469 KB)

Transmission_Line_EMF_Fields.pdf;

To Whomsoever it may concern,

As a concerned resident of Santa Clara, I am writing to express our apprehensions regarding the proposed installation route for high-power electric transmission lines and poles by Silicon Valley Power (SVP). This initiative is part of the project aimed at connecting the Northern Receiving Station (NRS) and Kifer Receiving Station (KRS).

Having reviewed the materials provided by your office and attended the recent public scoping meeting on May 23, 2024, I have delved into the details of the project. After careful consideration, I must voice my complete opposition to options A and B.

While acknowledging the necessity of upgrading the city's power infrastructure, there are several significant concerns that demand attention:

1. **Health Concerns**: The potential health risks associated with prolonged exposure to unsafe levels of electromagnetic fields (EMFs) emitted by these high-power electric lines are paramount. Numerous studies have indicated a possible correlation between EMF exposure and various health issues, including heightened risks of certain cancers and neurological disorders, especially in children and the elderly. I have extensively researched this topic and found compelling evidence supporting these concerns. For instance, there is extensive research supporting that magnetic fields generated by the proposed power lines far exceed safe levels for human exposure, posing significant risks to residents, particularly those living within close proximity to the installation site.

   Residents living in close proximity to these high power lines are at greater risk. I have gone through several medical and scientific research papers published on this matter that support our concern on this matter.
   Here are a few links for reference to some such research articles:

- https://www.ncbi.nlm.nih.gov/pmc/articles/PMC10590107/
- https://www.hydroone.com/poweroutagesandsafety_/corporatehealthandsafety_/EMFs/Transmission_Line_EMF_Fields.pdf
- https://www.emrss.com/blogs/emr-shielding-solutions-blogs/what-are-safe-levels-of-emf

   As a quick overview from these please see below:

The magnetic field generated by the high power lines is way beyond safe levels for humans. Here is a break up:

- 115kV power transmission line has a Mean Magnetic Field (mG) of 6.5 at a distance of <50 feet.
- 230kV power transmission line has a Mean Magnetic Field (mG) of 19.5 at a distance of <50 feet. (ref. Link2)

As the project stands today, the first row of houses in Mission Gardens on Lafayette Street will be less than 50 feet from the proposed installation point per Route A of these poles.The safe value of magnetic field around humans is 0.7mg (ref. Link3) per numbers listed above, it's evident that residents in close proximity will be exposed to very high unsafe levels of EMF. This will have a significant impact to all the residents within 50-75 feet. As mentioned ,more reference to various NIH research articles on Pubmed can also be provided if needed to reinforce the concerns.

While I am speaking up as a resident of Mission Gardens, there are many other houses and apartment complexes along and near Lafayette St. whose residents will also be impacted by the unsafe levels of EMF.
Even a small risk is substantial for public health safety and can and should not be ignored by authorities; we need to err on the side of caution.

2. **Increased Risk for Catastrophic Accidents and Fire Hazards**: The proposed route intersects with an already congested utility zone along Lafayette Street, heightening the risk of accidents and fire hazards, especially given the proximity to existing railway lines, residential buildings, and heavy vehicular traffic.
3. **Impact on Home Insurance Costs**: The addition of high-power transmission lines in front of residences introduces additional risk factors that could prompt insurance companies to raise premiums further, exacerbating the already soaring home insurance costs in the Bay Area.
4. **Property Value Concerns**: The aesthetic and health-related concerns associated with the proposed power lines could adversely affect property values in our community, posing a significant concern for homeowners who have invested substantially in their properties.
5. **Aesthetic Impact**: The installation of large electric poles and wires would detract from the visual appeal of our neighborhood, undermining the pride we take in our well-maintained homes and attractive streetscapes.
6. **Complexity and Inconvenience**: The construction and maintenance of these power lines could disrupt our daily lives, leading to noise pollution, road closures, and restricted access to homes. Moreover, frequent power outages and service interruptions may result from ongoing maintenance activities.
7. **Exploring Alternatives**: We urge the city to explore alternative solutions such as upgrading existing lines or implementing underground power lines, despite potentially higher upfront costs. These alternatives offer long-term benefits in terms of safety, reliability, and minimal aesthetic impact. Additionally, investigating advanced technologies and alternative routing options could help mitigate the adverse effects on our community.

I respectfully request a meeting with relevant city officials and representatives from the utility company to discuss these concerns in detail and explore viable solutions. Finding a balance between necessary infrastructure upgrades and safeguarding the health, safety, and aesthetic integrity of our community is imperative.

As a concerned resident of Santa Clara, and a member of a community directly affected by this proposal, I strongly oppose the installation of power lines in options A and B. I implore Silicon Valley Power to consider alternative options that prioritize public health and safety and minimize adverse impacts on Santa Clara residents.

Thank you for your attention to this pressing matter. I eagerly await your response and the opportunity to collaborate on finding a satisfactory resolution.

Sincerely,

Pratima Hans
Address: 4478 Moulin Pl, Santa Clara, CA 95054 Community Name: Mission Gardens, Santa Clara
Mob: 408-9159064

Concerns Regarding Upcoming High Power Electric Wire Poles in Our Community(Mission Gardens) for the upcoming SVP project connecting the Northern Receiving Station NRS to Kifer receiving station (KRS).

Manali Desai <dmanali.11@gmail.com>

Tue 5/28/2024 9:19 AM

Cc:NRS-KRS Project <NRS-KRS@aspeneg.com>;mayorandcouncil@santaclaraca.gov <mayorandcouncil@santaclaraca.gov>; info@siliconvalleypower.com <info@siliconvalleypower.com>;planningcommission@santaclaraca.gov <planningcommission@santaclaraca.gov>;manager@santaclaraca.gov <manager@santaclaraca.gov>

To Whomsoever it may concern,

As a concerned resident of Santa Clara, I am writing to express our apprehensions regarding the proposed installation route for high-power electric transmission lines and poles by Silicon Valley Power (SVP). This initiative is part of the project aimed at connecting the Northern Receiving Station (NRS) and Kifer Receiving Station (KRS).

Having reviewed the materials provided by your office and attended the recent public scoping meeting on May 23, 2024, I have delved into the details of the project. After careful consideration, I must voice my complete opposition to options A and B.

While acknowledging the necessity of upgrading the city's power infrastructure, there are several significant concerns that demand attention:

Health Concerns: The potential health risks associated with prolonged exposure to unsafe levels of electromagnetic fields (EMFs) emitted by these high-power electric lines are paramount. Numerous studies have indicated a possible correlation between EMF exposure and various health issues, including heightened risks of certain cancers and neurological disorders, especially in children and the elderly. I have extensively researched this topic and found compelling evidence supporting these concerns. For instance, there is extensive research supporting that magnetic fields generated by the proposed power lines far exceed safe levels for human exposure, posing significant risks to residents, particularly those living within close proximity to the installation site.

Residents living in close proximity to these high power lines are at greater risk. I have gone through several medical and scientific research papers published on this matter that support our concern on this matter.
Here are a few links for reference to some such research articles:

https://www.ncbi.nlm.nih.gov/pmc/articles/PMC10590107/
https://www.hydroone.com/poweroutagesandsafety_/corporatehealthandsafety_/EMFs/Transmission_Line_EMF_Fields.pdf
https://www.emrss.com/blogs/emr-shielding-solutions-blogs/what-are-safe-levels-of-emf

As a quick overview from these please see below:

The magnetic field generated by the high power lines is way beyond safe levels for humans. Here is a break up:

- 115kV power transmission line has a Mean Magnetic Field (mG) of 6.5 at a distance of <50 feet.
- 230kV power transmission line has a Mean Magnetic Field (mG) of 19.5 at a distance of <50 feet. (ref. Link2)

As the project stands today, the first row of houses in Mission Gardens on Lafayette Street will be less than 50 feet from the proposed installation point per Route A of these poles.The safe value of magnetic field around humans is 0.7mg (ref. Link3) per numbers listed above, it's evident that residents in close proximity will be exposed to very high unsafe levels of EMF. This will have a significant impact to all the residents within 50-75 feet. As mentioned ,more reference to various NIH research articles on Pubmed can also be provided if needed to reinforce the concerns.

While I am speaking up as a resident of Mission Gardens, there are many other houses and apartment complexes along and near Lafayette St. whose residents will also be impacted by the unsafe levels of EMF.
Even a small risk is substantial for public health safety and can and should not be ignored by authorities; we need to err on the side of caution.

Increased Risk for Catastrophic Accidents and Fire Hazards: The proposed route intersects with an already congested utility zone along Lafayette Street, heightening the risk of accidents and fire hazards, especially given the proximity to existing railway lines, residential buildings, and heavy vehicular traffic.

Impact on Home Insurance Costs: The addition of high-power transmission lines in front of residences introduces additional risk factors that could prompt insurance companies to raise premiums further, exacerbating the already soaring home insurance costs in the Bay Area.

Property Value Concerns: The aesthetic and health-related concerns associated with the proposed power lines could adversely affect property values in our community, posing a significant concern for homeowners who have invested substantially in their properties.

Aesthetic Impact: The installation of large electric poles and wires would detract from the visual appeal of our neighborhood, undermining the pride we take in our well-maintained homes and attractive streetscapes.

Complexity and Inconvenience: The construction and maintenance of these power lines could disrupt our daily lives, leading to noise pollution, road closures, and restricted access to homes. Moreover, frequent power outages and service interruptions may result from ongoing maintenance activities.

Exploring Alternatives: We urge the city to explore alternative solutions such as upgrading existing lines or implementing underground power lines, despite potentially higher upfront costs. These alternatives offer long-term benefits in terms of safety, reliability, and minimal aesthetic impact. Additionally, investigating advanced technologies and alternative routing options could help mitigate the adverse effects on our community.

I respectfully request a meeting with relevant city officials and representatives from the utility company to discuss these concerns in detail and explore viable solutions. Finding a balance between necessary infrastructure upgrades and safeguarding the health, safety, and aesthetic integrity of our community is imperative.

As a concerned resident of Santa Clara, and a member of a community directly affected by this proposal, I strongly oppose the installation of power lines in options A and B. I implore Silicon Valley

Power to consider alternative options that prioritize public health and safety and minimize adverse impacts on Santa Clara residents.

Thank you for your attention to this pressing matter. I eagerly await your response and the opportunity to collaborate on finding a satisfactory resolution.

Manali Desai

1913 Silva Pl, Santa Clara

770-363-3850

Resident of Mission Gardens Community

Concerns Regarding Upcoming High Power Electric Wire Poles in Our Community(Mission Gardens) for the upcoming SVP project connecting the Northern Receiving Station NRS to Kifer receiving station (KRS).

Vinay Iyer <vinay.iyer@virginia.edu>

Tue 5/28/2024 10:05 AM

To:NRS-KRS Project <NRS-KRS@aspeneg.com>;mayorandcouncil@santaclaraca.gov <mayorandcouncil@santaclaraca.gov>;info@siliconvalleypower.com <info@siliconvalleypower.com>; planningcommission@santaclaraca.gov <planningcommission@santaclaraca.gov>;manager@santaclaraca.gov <manager@santaclaraca.gov>

To Whomsoever it may concern,

As a concerned resident of Santa Clara, I am writing to express our apprehensions regarding the proposed installation route for high-power electric transmission lines and poles by Silicon Valley Power (SVP). This initiative is part of the project aimed at connecting the Northern Receiving Station (NRS) and Kifer Receiving Station (KRS).

Having reviewed the materials provided by your office and attended the recent public scoping meeting on May 23, 2024, I have delved into the details of the project. After careful consideration, I must voice my complete opposition to options A and B.

While acknowledging the necessity of upgrading the city's power infrastructure, there are several significant concerns that demand attention:

1. **Health Concerns**: The potential health risks associated with prolonged exposure to unsafe levels of electromagnetic fields (EMFs) emitted by these high-power

   Residents living in close proximity to these high power lines are at greater risk. I have gone through several medical and scientific research papers published on this matter that support our concern on this matter.
   Here are a few links for reference to some such research articles:

- https://www.ncbi.nlm.nih.gov/pmc/articles/PMC10590107/
- https://www.hydroone.com/poweroutagesandsafety_/corporatehealthandsafety_/EMFs/Transmission_Line_EMF_Fields.pdf
- https://www.emrss.com/blogs/emr-shielding-solutions-blogs/what-are-safe-levels-of-emf

   As a quick overview from these please see below:

   The magnetic field generated by the high power lines is way beyond safe levels for humans. Here is a break up:
   - 115kV power transmission line has a Mean Magnetic Field (mG) of 6.5 at a distance of <50 feet.
   - 230kV power transmission line has a Mean Magnetic Field (mG) of 19.5 at a distance of <50 feet. (ref. Link2)

   As the project stands today, the first row of houses in Mission Gardens on Lafayette Street will be less than 50 feet from the proposed installation point per Route A of these poles.The safe value of magnetic field around humans is 0.7mg (ref. Link3) per numbers listed above, it's evident that residents in close proximity will be exposed to very high unsafe levels of EMF. This will have a significant impact to all the residents within 50-75 feet. As mentioned ,more reference to various NIH research articles on Pubmed can also be provided if needed to reinforce the concerns.

   While I am speaking up as a resident of Mission Gardens, there are many other houses and apartment complexes along and near Lafayette St. whose residents will also be impacted by the unsafe levels of EMF.
   Even a small risk is substantial for public health safety and can and should not be ignored by authorities; we need to err on the side of caution.

2. **Increased Risk for Catastrophic Accidents and Fire Hazards**: The proposed route intersects with an already congested utility zone along Lafayette Street, he
3. **Impact on Home Insurance Costs**: The addition of high-power transmission lines in front of residences introduces additional risk factors that could prompt insu
4. **Property Value Concerns**: The aesthetic and health-related concerns associated with the proposed power lines could adversely affect property values in our co
5. **Aesthetic Impact**: The installation of large electric poles and wires would detract from the visual appeal of our neighborhood, undermining the pride we take in c
6. **Complexity and Inconvenience**: The construction and maintenance of these power lines could disrupt our daily lives, leading to noise pollution, road closures,
7. **Exploring Alternatives**: We urge the city to explore alternative solutions such as upgrading existing lines or implementing underground power lines, despite pot

I respectfully request a meeting with relevant city officials and representatives from the utility company to discuss these concerns in detail and explore viable solutions. Finding a balance between necessary infrastructure upgrades and safeguarding the health, safety, and aesthetic integrity of our community is imperative.

As a concerned resident of Santa Clara, and a member of a community directly affected by this proposal, I strongly oppose the installation of power lines in options A and B. I implore Silicon Valley Power to consider alternative options that prioritize public health and safety and minimize adverse impacts on Santa Clara residents.

Thank you for your attention to this pressing matter. I eagerly await your response and the opportunity to collaborate on finding a satisfactory resolution.

Sincerely
Dr. Vinay Iyer
4450 Moulin Pl, Santa Clara 95054
+1 919-771-5203
Mission Gardens Community

Concerns Regarding Upcoming High Power Electric Wire Poles in Our Community(Mission Gardens) for the upcoming SVP project connecting the Northern Receiving Station NRS to Kifer receiving station (KRS).

vinay iyer <iyer.vinay008@gmail.com>

Tue 5/28/2024 11:33 AM

To:NRS-KRS Project <NRS-KRS@aspeneg.com>;mayorandcouncil@santaclaraca.gov <mayorandcouncil@santaclaraca.gov>; info@siliconvalleypower.com <info@siliconvalleypower.com>;planningcommission@santaclaraca.gov <planningcommission@santaclaraca.gov>;manager@santaclaraca.gov <manager@santaclaraca.gov>

To Whomsoever it may concern,

As a concerned resident of Santa Clara, I am writing to express our apprehensions regarding the proposed installation route for high-power electric transmission lines and poles by Silicon Valley Power (SVP). This initiative is part of the project aimed at connecting the Northern Receiving Station (NRS) and Kifer Receiving Station (KRS).

Having reviewed the materials provided by your office and attended the recent public scoping meeting on May 23, 2024, I have delved into the details of the project. After careful consideration, I must voice my complete opposition to options A and B.

While acknowledging the necessity of upgrading the city's power infrastructure, there are several significant concerns that demand attention:

1. **Health Concerns**: The potential health risks associated with prolonged exposure to unsafe levels of electromagnetic fields (EMFs) emitted by these high-power electric lines are paramount. Numerous studies have indicated a possible correlation between EMF exposure and various health issues, including heightened risks of certain cancers and neurological disorders, especially in children and the elderly. I have extensively researched this topic and found compelling evidence supporting these concerns. For instance, there is extensive research supporting that magnetic fields generated by the proposed power lines far exceed safe levels for human exposure, posing significant risks to residents, particularly those living within close proximity to the installation site.

   Residents living in close proximity to these high power lines are at greater risk. I have gone through several medical and scientific research papers published on this matter that support our concern on this matter.
   Here are a few links for reference to some such research articles:

- https://www.ncbi.nlm.nih.gov/pmc/articles/PMC10590107/
- https://www.hydroone.com/poweroutagesandsafety_/corporatehealthandsafety_/EMFs/Transmission_Line_EMF_Fields.pdf
- https://www.emrss.com/blogs/emr-shielding-solutions-blogs/what-are-safe-levels-of-emf

As a quick overview from these please see below:

The magnetic field generated by the high power lines is way beyond safe levels for humans. Here is a break up:

- 115kV power transmission line has a Mean Magnetic Field (mG) of 6.5 at a distance of <50 feet.

- 230kV power transmission line has a Mean Magnetic Field (mG) of 19.5 at a distance of <50 feet. (ref. Link2)

As the project stands today, the first row of houses in Mission Gardens on Lafayette Street will be less than 50 feet from the proposed installation point per Route A of these poles.The safe value of magnetic field around humans is 0.7mg (ref. Link3) per numbers listed above, it's evident that residents in close proximity will be exposed to very high unsafe levels of EMF. This will have a significant impact to all the residents within 50-75 feet. As mentioned ,more reference to various NIH research articles on Pubmed can also be provided if needed to reinforce the concerns.

While I am speaking up as a resident of Mission Gardens, there are many other houses and apartment complexes along and near Lafayette St. whose residents will also be impacted by the unsafe levels of EMF.
Even a small risk is substantial for public health safety and can and should not be ignored by authorities; we need to err on the side of caution.

2. **Increased Risk for Catastrophic Accidents and Fire Hazards**: The proposed route intersects with an already congested utility zone along Lafayette Street, heightening the risk of accidents and fire hazards, especially given the proximity to existing railway lines, residential buildings, and heavy vehicular traffic.
3. **Impact on Home Insurance Costs**: The addition of high-power transmission lines in front of residences introduces additional risk factors that could prompt insurance companies to raise premiums further, exacerbating the already soaring home insurance costs in the Bay Area.
4. **Property Value Concerns**: The aesthetic and health-related concerns associated with the proposed power lines could adversely affect property values in our community, posing a significant concern for homeowners who have invested substantially in their properties.
5. **Aesthetic Impact**: The installation of large electric poles and wires would detract from the visual appeal of our neighborhood, undermining the pride we take in our well-maintained homes and attractive streetscapes.
6. **Complexity and Inconvenience**: The construction and maintenance of these power lines could disrupt our daily lives, leading to noise pollution, road closures, and restricted access to homes. Moreover, frequent power outages and service interruptions may result from ongoing maintenance activities.
7. **Exploring Alternatives**: We urge the city to explore alternative solutions such as upgrading existing lines or implementing underground power lines, despite potentially higher upfront costs. These alternatives offer long-term benefits in terms of safety, reliability, and minimal aesthetic impact. Additionally, investigating advanced technologies and alternative routing options could help mitigate the adverse effects on our community.

I respectfully request a meeting with relevant city officials and representatives from the utility company to discuss these concerns in detail and explore viable solutions. Finding a balance between necessary infrastructure upgrades and safeguarding the health, safety, and aesthetic integrity of our community is imperative.

As a concerned resident of Santa Clara, and a member of a community directly affected by this proposal, I strongly oppose the installation of power lines in options A and B. I implore Silicon Valley Power to consider alternative options that prioritize public health and safety and minimize adverse impacts on Santa Clara residents.

Thank you for your attention to this pressing matter. I eagerly await your response and the opportunity to collaborate on finding a satisfactory resolution.

Sincerely
Dr. Vinay Iyer
4450 Moulin Pl, Santa Clara 95054
+1 919-771-5203
Mission Gardens Community

Concerns Regarding Upcoming High Power Electric Wire Poles in Our Community(Mission Gardens) for the upcoming SVP project connecting the Northern Receiving Station NRS to Kifer receiving station (KRS).

Shankar Pandravada <emailshankar@gmail.com>

Tue 5/28/2024 12:27 PM

To:NRS-KRS Project <NRS-KRS@aspeneg.com>;Mayor and Council <mayorandcouncil@santaclaraca.gov>;info@siliconvalleypower.com <info@siliconvalleypower.com>; planningcommission@santaclaraca.gov <planningcommission@santaclaraca.gov>;manager@santaclaraca.gov <manager@santaclaraca.gov>

To Whomsoever it may concern,

As a concerned resident of Santa Clara, I am writing to express our apprehensions regarding the proposed installation route for high-power electric transmission lines and poles by Silicon Valley Power (SVP). This initiative is part of the project aimed at connecting the Northern Receiving Station (NRS) and Kifer Receiving Station (KRS).

Having reviewed the materials provided by your office and attended the recent public scoping meeting on May 23, 2024, I have delved into the details of the project. After careful consideration, I must voice my complete opposition to options A and B.

While we have provided rationale for our opposition, see the reasons below, the biggest and the most concerning for us is Health Concerns. Research after research has indicated the grave health concerns (articles provided below for your reference) of living close to high voltage power lines, the extent of it will not be felt immediately, and we may see the consequences of it only much later when none of us may be around!

While acknowledging the necessity of upgrading the city's power infrastructure, there are several significant concerns that demand attention:

1. **Health Concerns**: The potential health risks associated with prolonged exposure to unsafe levels of electromagnetic fields (EMFs) emitted by these high-power

   Residents living in close proximity to these high power lines are at greater risk. I have gone through several medical and scientific research papers published on this matter that support our concern on this matter.
   Here are a few links for reference to some such research articles:

- https://www.ncbi.nlm.nih.gov/pmc/articles/PMC10590107/
- https://www.hydroone.com/poweroutagesandsafety_/corporatehealthandsafety_/EMFs/Transmission_Line_EMF_Fields.pdf
- https://www.emrss.com/blogs/emr-shielding-solutions-blogs/what-are-safe-levels-of-emf

   As a quick overview from these please see below:

   The magnetic field generated by the high power lines is way beyond safe levels for humans. Here is a break up:
   - 115kV power transmission line has a Mean Magnetic Field (mG) of 6.5 at a distance of <50 feet.
   - 230kV power transmission line has a Mean Magnetic Field (mG) of 19.5 at a distance of <50 feet. (ref. Link2)

   As the project stands today, the first row of houses in Mission Gardens on Lafayette Street will be less than 50 feet from the proposed installation point per Route A of these poles.The safe value of magnetic field around humans is 0.7mg (ref. Link3) per numbers listed above, it's evident that residents in close proximity will be exposed to very high unsafe levels of EMF. This will have a significant impact to all the residents within 50-75 feet. As mentioned ,more reference to various NIH research articles on Pubmed can also be provided if needed to reinforce the concerns.

   While I am speaking up as a resident of Mission Gardens, there are many other houses and apartment complexes along and near Lafayette St. whose residents will also be impacted by the unsafe levels of EMF.
   Even a small risk is substantial for public health safety and can and should not be ignored by authorities; we need to err on the side of caution.

2. **Increased Risk for Catastrophic Accidents and Fire Hazards**: The proposed route intersects with an already congested utility zone along Lafayette Street, he
3. **Impact on Home Insurance Costs**: The addition of high-power transmission lines in front of residences introduces additional risk factors that could prompt insu
4. **Property Value Concerns**: The aesthetic and health-related concerns associated with the proposed power lines could adversely affect property values in our co
5. **Aesthetic Impact**: The installation of large electric poles and wires would detract from the visual appeal of our neighborhood, undermining the pride we take in c
6. **Complexity and Inconvenience**: The construction and maintenance of these power lines could disrupt our daily lives, leading to noise pollution, road closures,
7. **Exploring Alternatives**: We urge the city to explore alternative solutions such as upgrading existing lines or implementing underground power lines, despite pot

I respectfully request a meeting with relevant city officials and representatives from the utility company to discuss these concerns in detail and explore viable solutions. Finding a balance between necessary infrastructure upgrades and safeguarding the health, safety, and aesthetic integrity of our community is imperative.

As a concerned resident of Santa Clara, and a member of a community directly affected by this proposal, I strongly oppose the installation of power lines in options A and B. I implore Silicon Valley Power to consider alternative options that prioritize public health and safety and minimize adverse impacts on Santa Clara residents.

Thank you for your attention to this pressing matter. I eagerly await your response and the opportunity to collaborate on finding a satisfactory resolution.

Shankar Pandravada
2045 Garzoni Place, Santa Clara, CA-95054
Community: Mission Gardens

Concerns Regarding Upcoming High Power Electric Wire Poles in Our Community(Mission Gardens) for the upcoming SVP project connecting the Northern Receiving Station NRS to Kifer receiving station (KRS).

Shankar Pandravada <emailshankar@gmail.com>

Tue 5/28/2024 12:27 PM

To:NRS-KRS Project <NRS-KRS@aspeneg.com>;Mayor and Council <mayorandcouncil@santaclaraca.gov>;info@siliconvalleypower.com <info@siliconvalleypower.com>; planningcommission@santaclaraca.gov <planningcommission@santaclaraca.gov>;manager@santaclaraca.gov <manager@santaclaraca.gov>

To Whomsoever it may concern,

As a concerned resident of Santa Clara, I am writing to express our apprehensions regarding the proposed installation route for high-power electric transmission lines and poles by Silicon Valley Power (SVP). This initiative is part of the project aimed at connecting the Northern Receiving Station (NRS) and Kifer Receiving Station (KRS).

Having reviewed the materials provided by your office and attended the recent public scoping meeting on May 23, 2024, I have delved into the details of the project. After careful consideration, I must voice my complete opposition to options A and B.

While we have provided rationale for our opposition, see the reasons below, the biggest and the most concerning for us is Health Concerns. Research after research has indicated the grave health concerns (articles provided below for your reference) of living close to high voltage power lines, the extent of it will not be felt immediately, and we may see the consequences of it only much later when none of us may be around!

While acknowledging the necessity of upgrading the city's power infrastructure, there are several significant concerns that demand attention:

1. **Health Concerns**: The potential health risks associated with prolonged exposure to unsafe levels of electromagnetic fields (EMFs) emitted by these high-power

   Residents living in close proximity to these high power lines are at greater risk. I have gone through several medical and scientific research papers published on this matter that support our concern on this matter.
   Here are a few links for reference to some such research articles:

- https://www.ncbi.nlm.nih.gov/pmc/articles/PMC10590107/
- https://www.hydroone.com/poweroutagesandsafety_/corporatehealthandsafety_/EMFs/Transmission_Line_EMF_Fields.pdf
- https://www.emrss.com/blogs/emr-shielding-solutions-blogs/what-are-safe-levels-of-emf

   As a quick overview from these please see below:

   The magnetic field generated by the high power lines is way beyond safe levels for humans. Here is a break up:
   - 115kV power transmission line has a Mean Magnetic Field (mG) of 6.5 at a distance of <50 feet.
   - 230kV power transmission line has a Mean Magnetic Field (mG) of 19.5 at a distance of <50 feet. (ref. Link2)

   As the project stands today, the first row of houses in Mission Gardens on Lafayette Street will be less than 50 feet from the proposed installation point per Route A of these poles.The safe value of magnetic field around humans is 0.7mg (ref. Link3) per numbers listed above, it's evident that residents in close proximity will be exposed to very high unsafe levels of EMF. This will have a significant impact to all the residents within 50-75 feet. As mentioned ,more reference to various NIH research articles on Pubmed can also be provided if needed to reinforce the concerns.

   While I am speaking up as a resident of Mission Gardens, there are many other houses and apartment complexes along and near Lafayette St. whose residents will also be impacted by the unsafe levels of EMF.
   Even a small risk is substantial for public health safety and can and should not be ignored by authorities; we need to err on the side of caution.

2. **Increased Risk for Catastrophic Accidents and Fire Hazards**: The proposed route intersects with an already congested utility zone along Lafayette Street, he
3. **Impact on Home Insurance Costs**: The addition of high-power transmission lines in front of residences introduces additional risk factors that could prompt insu
4. **Property Value Concerns**: The aesthetic and health-related concerns associated with the proposed power lines could adversely affect property values in our co
5. **Aesthetic Impact**: The installation of large electric poles and wires would detract from the visual appeal of our neighborhood, undermining the pride we take in c
6. **Complexity and Inconvenience**: The construction and maintenance of these power lines could disrupt our daily lives, leading to noise pollution, road closures,
7. **Exploring Alternatives**: We urge the city to explore alternative solutions such as upgrading existing lines or implementing underground power lines, despite pot

I respectfully request a meeting with relevant city officials and representatives from the utility company to discuss these concerns in detail and explore viable solutions. Finding a balance between necessary infrastructure upgrades and safeguarding the health, safety, and aesthetic integrity of our community is imperative.

As a concerned resident of Santa Clara, and a member of a community directly affected by this proposal, I strongly oppose the installation of power lines in options A and B. I implore Silicon Valley Power to consider alternative options that prioritize public health and safety and minimize adverse impacts on Santa Clara residents.

Thank you for your attention to this pressing matter. I eagerly await your response and the opportunity to collaborate on finding a satisfactory resolution.

Shankar Pandravada
2045 Garzoni Place, Santa Clara, CA-95054
Community: Mission Gardens

Concerns Regarding Upcoming High Power Electric Wire Poles in Our Community(Mission Gardens) for the upcoming SVP project connecting the Northern Receiving Station NRS to Kifer receiving station (KRS).

Harini Tadinada <emailharini@gmail.com>

Tue 5/28/2024 12:27 PM

To:NRS-KRS Project <NRS-KRS@aspeneg.com>;mayorandcouncil@santaclaraca.gov <mayorandcouncil@santaclaraca.gov>;info@siliconvalleypower.com <info@siliconvalleypower.com>; planningcommission@santaclaraca.gov <planningcommission@santaclaraca.gov>;manager@santaclaraca.gov <manager@santaclaraca.gov>

To Whomsoever it may concern,

As a concerned resident of Santa Clara, I am writing to express our apprehensions regarding the proposed installation route for high-power electric transmission lines and poles by Silicon Valley Power (SVP). This initiative is part of the project aimed at connecting the Northern Receiving Station (NRS) and Kifer Receiving Station (KRS).

Having reviewed the materials provided by your office and attended the recent public scoping meeting on May 23, 2024, I have delved into the details of the project. After careful consideration, I must voice my complete opposition to options A and B.

While we have provided rationale for our opposition, see the reasons below, the biggest and the most concerning for us is Health Concerns. Research after research has indicated the grave health concerns (articles provided below for your reference) of living close to high voltage power lines, the extent of it will not be felt immediately, and we may see the consequences of it only much later when none of us may be around!

While acknowledging the necessity of upgrading the city's power infrastructure, there are several significant concerns that demand attention:

1. **Health Concerns**: The potential health risks associated with prolonged exposure to unsafe levels of electromagnetic fields (EMFs) emitted by these high-power

   Residents living in close proximity to these high power lines are at greater risk. I have gone through several medical and scientific research papers published on this matter that support our concern on this matter.
   Here are a few links for reference to some such research articles:

- https://www.ncbi.nlm.nih.gov/pmc/articles/PMC10590107/
- https://www.hydroone.com/poweroutagesandsafety_/corporatehealthandsafety_/EMFs/Transmission_Line_EMF_Fields.pdf
- https://www.emrss.com/blogs/emr-shielding-solutions-blogs/what-are-safe-levels-of-emf

   As a quick overview from these please see below:

   The magnetic field generated by the high power lines is way beyond safe levels for humans. Here is a break up:
   - 115kV power transmission line has a Mean Magnetic Field (mG) of 6.5 at a distance of <50 feet.
   - 230kV power transmission line has a Mean Magnetic Field (mG) of 19.5 at a distance of <50 feet. (ref. Link2)

   As the project stands today, the first row of houses in Mission Gardens on Lafayette Street will be less than 50 feet from the proposed installation point per Route A of these poles.The safe value of magnetic field around humans is 0.7mg (ref. Link3) per numbers listed above, it's evident that residents in close proximity will be exposed to very high unsafe levels of EMF. This will have a significant impact to all the residents within 50-75 feet. As mentioned ,more reference to various NIH research articles on Pubmed can also be provided if needed to reinforce the concerns.

   While I am speaking up as a resident of Mission Gardens, there are many other houses and apartment complexes along and near Lafayette St. whose residents will also be impacted by the unsafe levels of EMF.
   Even a small risk is substantial for public health safety and can and should not be ignored by authorities; we need to err on the side of caution.

2. **Increased Risk for Catastrophic Accidents and Fire Hazards**: The proposed route intersects with an already congested utility zone along Lafayette Street, he
3. **Impact on Home Insurance Costs**: The addition of high-power transmission lines in front of residences introduces additional risk factors that could prompt insu
4. **Property Value Concerns**: The aesthetic and health-related concerns associated with the proposed power lines could adversely affect property values in our co
5. **Aesthetic Impact**: The installation of large electric poles and wires would detract from the visual appeal of our neighborhood, undermining the pride we take in c
6. **Complexity and Inconvenience**: The construction and maintenance of these power lines could disrupt our daily lives, leading to noise pollution, road closures,
7. **Exploring Alternatives**: We urge the city to explore alternative solutions such as upgrading existing lines or implementing underground power lines, despite pot

I respectfully request a meeting with relevant city officials and representatives from the utility company to discuss these concerns in detail and explore viable solutions. Finding a balance between necessary infrastructure upgrades and safeguarding the health, safety, and aesthetic integrity of our community is imperative.

As a concerned resident of Santa Clara, and a member of a community directly affected by this proposal, I strongly oppose the installation of power lines in options A and B. I implore Silicon Valley Power to consider alternative options that prioritize public health and safety and minimize adverse impacts on Santa Clara residents.

Thank you for your attention to this pressing matter. I eagerly await your response and the opportunity to collaborate on finding a satisfactory resolution.

Harini Tadinada
2045 Garzoni Place, Santa Clara, CA-95054
Community: Mission Gardens

Concerns Regarding Upcoming High Power Electric Wire Poles in Our Community(Mission Gardens) for the upcoming SVP project connecting the Northern Receiving Station NRS to Kifer receiving station (KRS).

Harini and Shankar Pandravada <harini_shankar@hotmail.com>

Tue 5/28/2024 12:32 PM

To:NRS-KRS Project <NRS-KRS@aspeneg.com>;mayorandcouncil@santaclaraca.gov <mayorandcouncil@santaclaraca.gov>; info@siliconvalleypower.com <info@siliconvalleypower.com>;planningcommission@santaclaraca.gov <planningcommission@santaclaraca.gov>;manager@santaclaraca.gov <manager@santaclaraca.gov>

To Whomsoever it may concern,

As a concerned resident of Santa Clara, I am writing to express our apprehensions regarding the proposed installation route for high-power electric transmission lines and poles by Silicon Valley Power (SVP). This initiative is part of the project aimed at connecting the Northern Receiving Station (NRS) and Kifer Receiving Station (KRS).

Having reviewed the materials provided by your office and attended the recent public scoping meeting on May 23, 2024, I have delved into the details of the project. After careful consideration, I must voice my complete opposition to options A and B.

While we have provided rationale for our opposition, see the reasons below, the biggest and the most concerning for us is Health Concerns. Research after research has indicated the grave health concerns (articles provided below for your reference) of living close to high voltage power lines, the extent of it will not be felt immediately, and we may see the consequences of it only much later when none of us may be around!

While acknowledging the necessity of upgrading the city's power infrastructure, there are several significant concerns that demand attention:

1. **Health Concerns**: The potential health risks associated with prolonged exposure to unsafe levels of electromagnetic fields (EMFs) emitted by these high-power electric lines are paramount. Numerous studies have indicated a possible correlation between EMF exposure and various health issues, including heightened risks of certain cancers and neurological disorders, especially in children and the elderly. I have extensively researched this topic and found compelling evidence supporting these concerns. For instance, there is extensive research supporting that magnetic fields generated by the proposed power lines far exceed safe levels for human exposure, posing significant risks to residents, particularly those living within close proximity to the installation site.

Residents living in close proximity to these high power lines are at greater risk. I have gone through several medical and scientific research papers published on this matter that support our concern on this matter.
Here are a few links for reference to some such research articles:

- https://www.ncbi.nlm.nih.gov/pmc/articles/PMC10590107/

- https://www.hydroone.com/poweroutagesandsafety_/corporatehealthandsafety_/EMFs/Transmission_Line_EMF_Fields.pdf
- https://www.emrss.com/blogs/emr-shielding-solutions-blogs/what-are-safe-levels-of-emf

As a quick overview from these please see below:

The magnetic field generated by the high power lines is way beyond safe levels for humans. Here is a break up:

- 115kV power transmission line has a Mean Magnetic Field (mG) of 6.5 at a distance of <50 feet.
- 230kV power transmission line has a Mean Magnetic Field (mG) of 19.5 at a distance of <50 feet. (ref. Link2)

As the project stands today, the first row of houses in Mission Gardens on Lafayette Street will be less than 50 feet from the proposed installation point per Route A of these poles.The safe value of magnetic field around humans is 0.7mg (ref. Link3) per numbers listed above, it's evident that residents in close proximity will be exposed to very high unsafe levels of EMF. This will have a significant impact to all the residents within 50-75 feet. As mentioned ,more reference to various NIH research articles on Pubmed can also be provided if needed to reinforce the concerns.

While I am speaking up as a resident of Mission Gardens, there are many other houses and apartment complexes along and near Lafayette St. whose residents will also be impacted by the unsafe levels of EMF.
Even a small risk is substantial for public health safety and can and should not be ignored by authorities; we need to err on the side of caution.

2. **Increased Risk for Catastrophic Accidents and Fire Hazards**: The proposed route intersects with an already congested utility zone along Lafayette Street, heightening the risk of accidents and fire hazards, especially given the proximity to existing railway lines, residential buildings, and heavy vehicular traffic.

    a. In these times of climate change there is a concern of much bigger storms threatening us, in the event of a high wind storms (god forbid it never happens) there is a likely hood of downed power lines, and that would directly fall on the community which is in close proximity. Live high electric downed power lines, and you can imagine the havoc it has the potential to cause!!
3. **Impact on Home Insurance Costs**: The addition of high-power transmission lines in front of residences introduces additional risk factors that could prompt insurance companies to raise premiums further, exacerbating the already soaring home insurance costs in the Bay Area.
4. **Property Value Concerns**: The aesthetic and health-related concerns associated with the proposed power lines could adversely affect property values in our community, posing a significant concern for homeowners who have invested substantially in their properties.
5. **Aesthetic Impact**: The installation of large electric poles and wires would detract from the visual appeal of our neighborhood, undermining the pride we take in our well-maintained homes and attractive streetscapes.

6. **Complexity and Inconvenience**: The construction and maintenance of these power lines could disrupt our daily lives, leading to noise pollution, road closures, and restricted access to homes. Moreover, frequent power outages and service interruptions may result from ongoing maintenance activities.
7. **Exploring Alternatives**: We urge the city to explore alternative solutions such as upgrading existing lines or implementing underground power lines, despite potentially higher upfront costs. These alternatives offer long-term benefits in terms of safety, reliability, and minimal aesthetic impact. Additionally, investigating advanced technologies and alternative routing options could help mitigate the adverse effects on our community.

I respectfully request a meeting with relevant city officials and representatives from the utility company to discuss these concerns in detail and explore viable solutions. Finding a balance between necessary infrastructure upgrades and safeguarding the health, safety, and aesthetic integrity of our community is imperative.

As a concerned resident of Santa Clara, and a member of a community directly affected by this proposal, I strongly oppose the installation of power lines in options A and B. I implore Silicon Valley Power to consider alternative options that prioritize public health and safety and minimize adverse impacts on Santa Clara residents.

Thank you for your attention to this pressing matter. I eagerly await your response and the opportunity to collaborate on finding a satisfactory resolution.

Harini Tadinada
2045 Garzoni Place, Santa Clara, CA-95054
Community: Mission Gardens

Concerns Regarding Upcoming High Power Electric Wire Poles in Our Community(Mission Gardens) for the upcoming SVP project connecting the Northern Receiving Station NRS to Kifer receiving station (KRS).

pankaj sinha <pankajksinha@gmail.com>

Tue 5/28/2024 12:33 PM

To:NRS-KRS Project <NRS-KRS@aspeneg.com>;mayorandcouncil@santaclaraca.gov <mayorandcouncil@santaclaraca.gov>;info@siliconvalleypower.com <info@siliconvalleypower.com>; planningcommission@santaclaraca.gov <planningcommission@santaclaraca.gov>;manager@santaclaraca.gov <manager@santaclaraca.gov>

To Whomsoever it may concern,

As a concerned resident of Santa Clara, I am writing to express our apprehensions regarding the proposed installation route for high-power electric transmission lines and poles by Silicon Valley Power (SVP). This initiative is part of the project aimed at connecting the Northern Receiving Station (NRS) and Kifer Receiving Station (KRS).

Having reviewed the materials provided by your office and attended the recent public scoping meeting on May 23, 2024, I have delved into the details of the project. After careful consideration, I must voice my complete opposition to options A and B.

While acknowledging the necessity of upgrading the city's power infrastructure, there are several significant concerns that demand attention:

1. **Health Concerns**: The potential health risks associated with prolonged exposure to unsafe levels of electromagnetic fields (EMFs) emitted by these high-power

   Residents living in close proximity to these high power lines are at greater risk. I have gone through several medical and scientific research papers published on this matter that support our concern on this matter.
   Here are a few links for reference to some such research articles:

- https://www.ncbi.nlm.nih.gov/pmc/articles/PMC10590107/
- https://www.hydroone.com/poweroutagesandsafety_/corporatehealthandsafety_/EMFs/Transmission_Line_EMF_Fields.pdf
- https://www.emrss.com/blogs/emr-shielding-solutions-blogs/what-are-safe-levels-of-emf

   As a quick overview from these please see below:

   The magnetic field generated by the high power lines is way beyond safe levels for humans. Here is a break up:
   - 115kV power transmission line has a Mean Magnetic Field (mG) of 6.5 at a distance of <50 feet.
   - 230kV power transmission line has a Mean Magnetic Field (mG) of 19.5 at a distance of <50 feet. (ref. Link2)

   As the project stands today, the first row of houses in Mission Gardens on Lafayette Street will be less than 50 feet from the proposed installation point per Route A of these poles.The safe value of magnetic field around humans is 0.7mg (ref. Link3) per numbers listed above, it's evident that residents in close proximity will be exposed to very high unsafe levels of EMF. This will have a significant impact to all the residents within 50-75 feet. As mentioned ,more reference to various NIH research articles on Pubmed can also be provided if needed to reinforce the concerns.

   While I am speaking up as a resident of Mission Gardens, there are many other houses and apartment complexes along and near Lafayette St. whose residents will also be impacted by the unsafe levels of EMF.
   Even a small risk is substantial for public health safety and can and should not be ignored by authorities; we need to err on the side of caution.

2. **Increased Risk for Catastrophic Accidents and Fire Hazards**: The proposed route intersects with an already congested utility zone along Lafayette Street, he
3. **Impact on Home Insurance Costs**: The addition of high-power transmission lines in front of residences introduces additional risk factors that could prompt insu
4. **Property Value Concerns**: The aesthetic and health-related concerns associated with the proposed power lines could adversely affect property values in our co
5. **Aesthetic Impact**: The installation of large electric poles and wires would detract from the visual appeal of our neighborhood, undermining the pride we take in c
6. **Complexity and Inconvenience**: The construction and maintenance of these power lines could disrupt our daily lives, leading to noise pollution, road closures,
7. **Exploring Alternatives**: We urge the city to explore alternative solutions such as upgrading existing lines or implementing underground power lines, despite pot

I respectfully request a meeting with relevant city officials and representatives from the utility company to discuss these concerns in detail and explore viable solutions. Finding a balance between necessary infrastructure upgrades and safeguarding the health, safety, and aesthetic integrity of our community is imperative.

As a concerned resident of Santa Clara, and a member of a community directly affected by this proposal, I strongly oppose the installation of power lines in options A and B. I implore Silicon Valley Power to consider alternative options that prioritize public health and safety and minimize adverse impacts on Santa Clara residents.

Thank you for your attention to this pressing matter. I eagerly await your response and the opportunity to collaborate on finding a satisfactory resolution.

Thank you!

Pankaj Sinha (Contact : Phone: 408 836 5498, email: pankajksinha@gmail.com)

4485 Lafayette Street, Santa Clara, CA 95054

Mission Garden Homes, Santa Clara

Concerns Regarding Upcoming High Power Electric Wire Poles in Our Community(Mission Gardens) for the upcoming SVP project connecting the Northern Receiving Station NRS to Kifer receiving station (KRS).

Darshna Siva <darshna1993@gmail.com>

Tue 5/28/2024 3:07 PM

To:NRS-KRS Project <NRS-KRS@aspeneg.com>;mayorandcouncil@santaclaraca.gov <mayorandcouncil@santaclaraca.gov>; info@siliconvalleypower.com <info@siliconvalleypower.com>;planningcommission@santaclaraca.gov <planningcommission@santaclaraca.gov>;manager@santaclaraca.gov <manager@santaclaraca.gov>

To Whomsoever it may concern,

As a concerned resident of Santa Clara, I am writing to express our apprehensions regarding the proposed installation route for high-power electric transmission lines and poles by Silicon Valley Power (SVP). This initiative is part of the project aimed at connecting the Northern Receiving Station (NRS) and Kifer Receiving Station (KRS).

Having reviewed the materials provided by your office and having attended the recent public scoping meeting on May 23, 2024, I have delved into the details of the project. After careful consideration, I must voice my complete opposition to options A and B.

While acknowledging the necessity of upgrading the city's power infrastructure, there are several significant concerns that demand attention:

1. **Health Concerns**: The potential health risks associated with prolonged exposure to unsafe levels of electromagnetic fields (EMFs) emitted by these high-power electric lines are paramount. Numerous studies have indicated a possible correlation between EMF exposure and various health issues, including heightened risks of certain cancers and neurological disorders, especially in children and the elderly. I have extensively researched this topic and found compelling evidence supporting these concerns. For instance, there is extensive research supporting that magnetic fields generated by the proposed power lines far exceed safe levels for human exposure, posing significant risks to residents, particularly those living within close proximity to the installation site.

   Residents living in close proximity to these high power lines are at greater risk. I have gone through several medical and scientific research papers published on this matter that support our concern on this matter.
   Here are a few links for reference to some such research articles:

- https://www.ncbi.nlm.nih.gov/pmc/articles/PMC10590107/
- https://www.hydroone.com/poweroutagesandsafety_/corporatehealthandsafety_/EMFs/Transmission_Line_EMF_Fields.pdf
- https://www.emrss.com/blogs/emr-shielding-solutions-blogs/what-are-safe-levels-of-emf

   As a quick overview from these please see below:

   The magnetic field generated by the high power lines is way beyond safe levels for humans. Here is a break up:

   - 115kV power transmission line has a Mean Magnetic Field (mG) of 6.5 at a distance of <50 feet.

- 230kV power transmission line has a Mean Magnetic Field (mG) of 19.5 at a distance of <50 feet. (ref. Link2)

As the project stands today, the first row of houses in Mission Gardens on Lafayette Street will be less than 50 feet from the proposed installation point per Route A of these poles.The safe value of magnetic field around humans is 0.7mg (ref. Link3) per numbers listed above, it's evident that residents in close proximity will be exposed to very high unsafe levels of EMF. This will have a significant impact to all the residents within 50-75 feet. As mentioned ,more reference to various NIH research articles on Pubmed can also be provided if needed to reinforce the concerns.

While I am speaking up as a resident of Mission Gardens, there are many other houses and apartment complexes along and near Lafayette St. whose residents will also be impacted by the unsafe levels of EMF.
Even a small risk is substantial for public health safety and can and should not be ignored by authorities; we need to err on the side of caution.

2. **Increased Risk for Catastrophic Accidents and Fire Hazards**: The proposed route intersects with an already congested utility zone along Lafayette Street, heightening the risk of accidents and fire hazards, especially given the proximity to existing railway lines, residential buildings, and heavy vehicular traffic.
3. **Impact on Home Insurance Costs**: The addition of high-power transmission lines in front of residences introduces additional risk factors that could prompt insurance companies to raise premiums further, exacerbating the already soaring home insurance costs in the Bay Area.
4. **Property Value Concerns**: The aesthetic and health-related concerns associated with the proposed power lines could adversely affect property values in our community, posing a significant concern for homeowners who have invested substantially in their properties.
5. **Aesthetic Impact**: The installation of large electric poles and wires would detract from the visual appeal of our neighborhood, undermining the pride we take in our well-maintained homes and attractive streetscapes.
6. **Complexity and Inconvenience**: The construction and maintenance of these power lines could disrupt our daily lives, leading to noise pollution, road closures, and restricted access to homes. Moreover, frequent power outages and service interruptions may result from ongoing maintenance activities.
7. **Exploring Alternatives**: We urge the city to explore alternative solutions such as upgrading existing lines or implementing underground power lines, despite potentially higher upfront costs. These alternatives offer long-term benefits in terms of safety, reliability, and minimal aesthetic impact. Additionally, investigating advanced technologies and alternative routing options could help mitigate the adverse effects on our community.

I respectfully request a meeting with relevant city officials and representatives from the utility company to discuss these concerns in detail and explore viable solutions. Finding a balance between necessary infrastructure upgrades and safeguarding the health, safety, and aesthetic integrity of our community is imperative.

As a concerned resident of Santa Clara, and a member of a community directly affected by this proposal, I strongly oppose the installation of power lines in options A and B. I implore Silicon Valley Power to consider alternative options that prioritize public health and safety and minimize adverse impacts on Santa Clara residents.

Thank you for your attention to this pressing matter. I eagerly await your response and the opportunity to collaborate on finding a satisfactory resolution.

NRS-KRS 115 kV Second Project Scoping Meeting Response

peter@bicmosfoundry.com <peter@bicmosfoundry.com>

Tue 5/28/2024 3:33 PM

To:NRS-KRS Project <NRS-KRS@aspeneg.com>;GWeeks@aspengroup.com <GWeeks@aspengroup.com>
Cc:peter@bicmosfoundry.com <peter@bicmosfoundry.com>

Dear Aspen Environmental Group & Silicon Valley Power,

Thank you for letting me attend the May 23, 2024 Second Scoping Meeting. I wish I had attended the first; will review the video.
BiCMOS is a semiconductor Chip manufacturing company located at 975 Comstock Street in Santa Clara, sharing a fence line with the SVP Power Plant. We supply Chips to companies in critical aerospace, military , energy & other industries and must plan to avoid supply disruptions to them. We currently are supplied natural gas from PG&E, water & electricity from the City and nitrogen gas from Air Products via the Air Products Pipeline underground.

Today I heard about three potential plans for the NRS-KRS 115 kV Transmission Line, with various locations for what potentially can be a mix of above ground & below ground lines. Shall we schedule at your earliest convenience (before May 29) to meet at SVP or our Office to review detailed maps of the various proposed lines - aiming to identify potential impacts and likely dates of potential impact/supply disruptions. My intention is together to identify problem areas & workarounds ASAP.

Best Regards,
Peter Liljegren
Mobile 650 346 3267

Written or emailed comments must be received by 5:00 p.m. on May 29, 2024, at the following mailing address or email address: Allie Jackman Principal Electric Utility Engineer Silicon Valley Power c/o Aspen Environmental Group 235 Montgomery Street, Suite 967 San Francisco, CA 94104-3002 NRS-KRS@aspeneg.com. Questions to submit to GWeeks@aspengroup.com

Concerns with Proposed High Power Electric transmission lines Mission Gardens Community for the upcoming SVP project connecting the Northern Receiving Station NRS to Kifer receiving station (KRS).

Preetika <preetikaloomba1@yahoo.com>

Mon 5/27/2024 3:18 PM

To:mayorandcouncil@santaclaraca.gov <mayorandcouncil@santaclaraca.gov>;info@siliconvalleypower.com <info@siliconvalleypower.com>;planningcommission@santaclaraca.gov <planningcommission@santaclaraca.gov>; manager@santaclaraca.gov <manager@santaclaraca.gov>;NRS-KRS Project <NRS-KRS@aspeneg.com>

To Whomsoever it may concern,

As a concerned resident of Santa Clara, I am writing to express our apprehensions regarding the proposed installation route for high-power electric transmission lines and poles by Silicon Valley Power (SVP). This initiative is part of the project aimed at connecting the Northern Receiving Station (NRS) and Kifer Receiving Station (KRS).

Having reviewed the materials provided by your office and attended the recent public scoping meeting on May 23, 2024, I have delved into the details of the project. After careful consideration, I must voice my complete opposition to options A and B.

While acknowledging the necessity of upgrading the city's power infrastructure, there are several significant concerns that demand attention:

1. **Health Concerns**: The potential health risks associated with prolonged exposure to unsafe levels of electromagnetic fields (EMFs) emitted by these high-power electric lines are paramount. Numerous studies have indicated a possible correlation between EMF exposure and various health issues, including heightened risks of certain cancers and neurological disorders, especially in children and the elderly. I have extensively researched this topic and found compelling evidence supporting these concerns. For instance,

there is extensive research supporting that magnetic fields generated by the proposed power lines far exceed safe levels for human exposure, posing significant risks to residents, particularly those living within close proximity to the installation site.

Here are a few links for reference to some such research articles:

- https://www.ncbi.nlm.nih.gov/pmc/articles/PMC10590107/
- https://www.hydroone.com/poweroutagesandsafety_/corporatehealthandsafety_/EMFs/Transmission_Line_EMF_Fields.pdf
- https://www.emrss.com/blogs/emr-shielding-solutions-blogs/what-are-safe-levels-of-emf

As a quick overview from these please see below:

The magnetic field generated by the high power lines is way beyond safe levels for humans. Here is a break up:

Â· 115kV power transmission line has a Mean Magnetic Field (mG) of 6.5 at a distance of <50 feet.

Â· 230kV power transmission line has a Mean Magnetic Field (mG) of 19.5 at a distance of <50 feet. (ref. Link2)

As the project stands today, the first row of houses in Mission Gardens on Lafayette Street will be less than 50 feet from the proposed installation point per Route A of these poles.The safe value of magnetic field around humans is 0.7mg (ref. Link3) per numbers listed above, it's evident that residents in close proximity will be exposed to very high unsafe levels of

EMF. This will have a significant impact to all the residents within 50-75 feet. As mentioned ,more reference to various NIH research articles on Pubmed can also be provided if needed to reinforce the concerns.

While I am speaking up as a resident of Mission Gardens, there are many other houses and apartment complexes along and near Lafayette St. whose residents will also be impacted by the unsafe levels of EMF.

Even a small risk is substantial for public health safety and can and should not be ignored by authorities; we need to err on the side of caution.

2. **Increased Risk for Catastrophic Accidents and Fire Hazards**: The proposed route intersects with an already congested utility zone along Lafayette Street, heightening the risk of accidents and fire hazards, especially given the proximity to existing railway lines, residential buildings, and heavy vehicular traffic.
3. **Impact on Home Insurance Costs**: The addition of high-power transmission lines in front of residences introduces additional risk factors that could prompt insurance companies to raise premiums further, exacerbating the already soaring home insurance costs in the Bay Area.
4. **Property Value Concerns**: The aesthetic and health-related concerns associated with the proposed power lines could adversely affect property values in our community, posing a significant concern for homeowners who have invested substantially in their properties.
5. **Aesthetic Impact**: The installation of large electric poles and wires would detract from the visual appeal of our

neighborhood, undermining the pride we take in our well-maintained homes and attractive streetscapes.

6. **Complexity and Inconvenience**: The construction and maintenance of these power lines could disrupt our daily lives, leading to noise pollution, road closures, and restricted access to homes. Moreover, frequent power outages and service interruptions may result from ongoing maintenance activities.
7. **Exploring Alternatives**: We urge the city to explore alternative solutions such as upgrading existing lines or implementing underground power lines, despite potentially higher upfront costs. These alternatives offer long-term benefits in terms of safety, reliability, and minimal aesthetic impact. Additionally, investigating advanced technologies and alternative routing options could help mitigate the adverse effects on our community.

I respectfully request a meeting with relevant city officials and representatives from the utility company to discuss these concerns in detail and explore viable solutions. Finding a balance between necessary infrastructure upgrades and safeguarding the health, safety, and aesthetic integrity of our community is imperative.

As a concerned resident of Santa Clara, and a member of a community directly affected by this proposal, I strongly oppose the installation of power lines in options A and B. I implore Silicon Valley Power to consider alternative options that prioritize public health and safety and minimize adverse impacts on residents.

Thank you for your attention to this pressing matter. I eagerly await your response and the opportunity to collaborate on finding a satisfactory resolution.

Sincerely

Preetika Tiwari

Address: 4489 Lafayette St. Santa Clara, CA 95054
Phone: 940-232-6463

Mission Gardens Community at intersection of Lafayette and Hope dr.

Concerns Regarding Upcoming High Power Electric Wire Poles in Our Community(Mission Gardens)

Amit Thakkar <athakkar2015@gmail.com>

Tue 5/28/2024 4:08 PM

To:NRS-KRS Project <NRS-KRS@aspeneg.com>

Subject: Concerns Regarding Upcoming High Power Electric Wire Poles in Our Community(Mission Gardens) for the upcoming SVP project connecting the Northern Receiving Station NRS to Kifer receiving station (KRS).

To Whomsoever it may concern,

As a concerned resident of Santa Clara, I am writing to express our apprehensions regarding the proposed installation route for high-power electric transmission lines and poles by Silicon Valley Power (SVP). This initiative is part of the project aimed at connecting the Northern Receiving Station (NRS) and Kifer Receiving Station (KRS).

Having reviewed the materials provided by your office and attended the recent public scoping meeting on May 23, 2024, I have delved into the details of the project. After careful consideration, I must voice my complete opposition to options A and B.

While acknowledging the necessity of upgrading the city's power infrastructure, there are several significant concerns that demand attention:

Health Concerns: The potential health risks associated with prolonged exposure to unsafe levels of electromagnetic fields (EMFs) emitted by these high-power electric lines are paramount. Numerous studies have indicated a possible correlation between EMF exposure and various health issues, including heightened risks of certain cancers and neurological disorders, especially in children and the elderly. I have extensively researched this topic and found compelling evidence supporting these concerns. For instance, there is extensive research supporting that magnetic fields generated by the proposed power lines far exceed safe levels for human exposure, posing significant risks to residents, particularly those living within close proximity to the installation site.

Residents living in close proximity to these high power lines are at greater risk. I have gone through several medical and scientific research papers published on this matter that support our concern on this matter.
Here are a few links for reference to some such research articles:

https://www.ncbi.nlm.nih.gov/pmc/articles/PMC10590107/
https://www.hydroone.com/poweroutagesandsafety_/corporatehealthandsafety_/EMFs/Transmission_Line_EMF_Fields.pdf
https://www.emrss.com/blogs/emr-shielding-solutions-blogs/what-are-safe-levels-of-emf

As a quick overview from these please see below:

The magnetic field generated by the high power lines is way beyond safe levels for humans. Here is a break up:

- 115kV power transmission line has a Mean Magnetic Field (mG) of 6.5 at a distance of <50 feet.
- 230kV power transmission line has a Mean Magnetic Field (mG) of 19.5 at a distance of <50 feet. (ref. Link2)

As the project stands today, the first row of houses in Mission Gardens on Lafayette Street will be less than 50 feet from the proposed installation point per Route A of these poles.The safe value of magnetic field around humans is 0.7mg (ref. Link3) per numbers listed above, it's evident that residents in close proximity will be exposed to very high unsafe levels of EMF. This will have a significant impact to all the residents within 50-75 feet. As mentioned ,more reference to various NIH research articles on Pubmed can also be provided if needed to reinforce the concerns.

While I am speaking up as a resident of Mission Gardens, there are many other houses and apartment complexes along and near Lafayette St. whose residents will also be impacted by the unsafe levels of EMF.
Even a small risk is substantial for public health safety and can and should not be ignored by authorities; we need to err on the side of caution.

Increased Risk for Catastrophic Accidents and Fire Hazards: The proposed route intersects with an already congested utility zone along Lafayette Street, heightening the risk of accidents and fire hazards, especially given the proximity to existing railway lines, residential buildings, and heavy vehicular traffic.

Impact on Home Insurance Costs: The addition of high-power transmission lines in front of residences introduces additional risk factors that could prompt insurance companies to raise premiums further, exacerbating the already soaring home insurance costs in the Bay Area.

Property Value Concerns: The aesthetic and health-related concerns associated with the proposed power lines could adversely affect property values in our community, posing a significant concern for homeowners who have invested substantially in their properties.

Aesthetic Impact: The installation of large electric poles and wires would detract from the visual appeal of our neighborhood, undermining the pride we take in our well-maintained homes and attractive streetscapes.

Complexity and Inconvenience: The construction and maintenance of these power lines could disrupt our daily lives, leading to noise pollution, road closures, and restricted access to homes. Moreover, frequent power outages and service interruptions may result from ongoing maintenance activities.

Exploring Alternatives: We urge the city to explore alternative solutions such as upgrading existing lines or implementing underground power lines, despite potentially higher upfront costs. These alternatives offer long-term benefits in terms of safety, reliability, and minimal aesthetic impact. Additionally, investigating advanced technologies and alternative routing options could help mitigate the adverse effects on our community.

I respectfully request a meeting with relevant city officials and representatives from the utility company to discuss these concerns in detail and explore viable solutions. Finding a balance between necessary infrastructure upgrades and safeguarding the health, safety, and aesthetic integrity of our community is imperative.

As a concerned resident of Santa Clara, and a member of a community directly affected by this proposal, I strongly oppose the installation of power lines in options A and B. I implore Silicon Valley Power to consider alternative options that prioritize public health and safety and minimize adverse impacts on Santa Clara residents.

Thank you for your attention to this pressing matter. I eagerly await your response and the opportunity to collaborate on finding a satisfactory resolution.

Amit Thakkar

1857 Silva Place, Santa Clara, CA 95054

408-655-1147 (M)

Missions Gardens Community, Santa Clara

Concerns Regarding Upcoming High Power Electric Wire Poles in Our Community(Mission Gardens) for the upcoming SVP project connecting the Northern Receiving Station NRS to Kifer receiving station (KRS).

Vinay Iyer <vinay.iyer@virginia.edu>

Tue 5/28/2024 10:05 AM

To:NRS-KRS Project <NRS-KRS@aspeneg.com>;mayorandcouncil@santaclaraca.gov <mayorandcouncil@santaclaraca.gov>;info@siliconvalleypower.com <info@siliconvalleypower.com>; planningcommission@santaclaraca.gov <planningcommission@santaclaraca.gov>;manager@santaclaraca.gov <manager@santaclaraca.gov>

To Whomsoever it may concern,

As a concerned resident of Santa Clara, I am writing to express our apprehensions regarding the proposed installation route for high-power electric transmission lines and poles by Silicon Valley Power (SVP). This initiative is part of the project aimed at connecting the Northern Receiving Station (NRS) and Kifer Receiving Station (KRS).

Having reviewed the materials provided by your office and attended the recent public scoping meeting on May 23, 2024, I have delved into the details of the project. After careful consideration, I must voice my complete opposition to options A and B.

While acknowledging the necessity of upgrading the city's power infrastructure, there are several significant concerns that demand attention:

1. **Health Concerns**: The potential health risks associated with prolonged exposure to unsafe levels of electromagnetic fields (EMFs) emitted by these high-power

   Residents living in close proximity to these high power lines are at greater risk. I have gone through several medical and scientific research papers published on this matter that support our concern on this matter.
   Here are a few links for reference to some such research articles:

- https://www.ncbi.nlm.nih.gov/pmc/articles/PMC10590107/
- https://www.hydroone.com/poweroutagesandsafety_/corporatehealthandsafety_/EMFs/Transmission_Line_EMF_Fields.pdf
- https://www.emrss.com/blogs/emr-shielding-solutions-blogs/what-are-safe-levels-of-emf

   As a quick overview from these please see below:

   The magnetic field generated by the high power lines is way beyond safe levels for humans. Here is a break up:
   - 115kV power transmission line has a Mean Magnetic Field (mG) of 6.5 at a distance of <50 feet.
   - 230kV power transmission line has a Mean Magnetic Field (mG) of 19.5 at a distance of <50 feet. (ref. Link2)

   As the project stands today, the first row of houses in Mission Gardens on Lafayette Street will be less than 50 feet from the proposed installation point per Route A of these poles.The safe value of magnetic field around humans is 0.7mg (ref. Link3) per numbers listed above, it's evident that residents in close proximity will be exposed to very high unsafe levels of EMF. This will have a significant impact to all the residents within 50-75 feet. As mentioned ,more reference to various NIH research articles on Pubmed can also be provided if needed to reinforce the concerns.

   While I am speaking up as a resident of Mission Gardens, there are many other houses and apartment complexes along and near Lafayette St. whose residents will also be impacted by the unsafe levels of EMF.
   Even a small risk is substantial for public health safety and can and should not be ignored by authorities; we need to err on the side of caution.

2. **Increased Risk for Catastrophic Accidents and Fire Hazards**: The proposed route intersects with an already congested utility zone along Lafayette Street, he
3. **Impact on Home Insurance Costs**: The addition of high-power transmission lines in front of residences introduces additional risk factors that could prompt insu
4. **Property Value Concerns**: The aesthetic and health-related concerns associated with the proposed power lines could adversely affect property values in our co
5. **Aesthetic Impact**: The installation of large electric poles and wires would detract from the visual appeal of our neighborhood, undermining the pride we take in c
6. **Complexity and Inconvenience**: The construction and maintenance of these power lines could disrupt our daily lives, leading to noise pollution, road closures,
7. **Exploring Alternatives**: We urge the city to explore alternative solutions such as upgrading existing lines or implementing underground power lines, despite pot

I respectfully request a meeting with relevant city officials and representatives from the utility company to discuss these concerns in detail and explore viable solutions. Finding a balance between necessary infrastructure upgrades and safeguarding the health, safety, and aesthetic integrity of our community is imperative.

As a concerned resident of Santa Clara, and a member of a community directly affected by this proposal, I strongly oppose the installation of power lines in options A and B. I implore Silicon Valley Power to consider alternative options that prioritize public health and safety and minimize adverse impacts on Santa Clara residents.

Thank you for your attention to this pressing matter. I eagerly await your response and the opportunity to collaborate on finding a satisfactory resolution.

Sincerely
Dr. Vinay Iyer
4450 Moulin Pl, Santa Clara 95054
+1 919-771-5203
Mission Gardens Community

Concerns Regarding Upcoming High Power Electric Wire Poles in Our Community(Mission Gardens)

Amit Thakkar <athakkar2015@gmail.com>

Tue 5/28/2024 4:08 PM

To:NRS-KRS Project <NRS-KRS@aspeneg.com>

Subject: Concerns Regarding Upcoming High Power Electric Wire Poles in Our Community(Mission Gardens) for the upcoming SVP project connecting the Northern Receiving Station NRS to Kifer receiving station (KRS).

To Whomsoever it may concern,

As a concerned resident of Santa Clara, I am writing to express our apprehensions regarding the proposed installation route for high-power electric transmission lines and poles by Silicon Valley Power (SVP). This initiative is part of the project aimed at connecting the Northern Receiving Station (NRS) and Kifer Receiving Station (KRS).

Having reviewed the materials provided by your office and attended the recent public scoping meeting on May 23, 2024, I have delved into the details of the project. After careful consideration, I must voice my complete opposition to options A and B.

While acknowledging the necessity of upgrading the city's power infrastructure, there are several significant concerns that demand attention:

Health Concerns: The potential health risks associated with prolonged exposure to unsafe levels of electromagnetic fields (EMFs) emitted by these high-power electric lines are paramount. Numerous studies have indicated a possible correlation between EMF exposure and various health issues, including heightened risks of certain cancers and neurological disorders, especially in children and the elderly. I have extensively researched this topic and found compelling evidence supporting these concerns. For instance, there is extensive research supporting that magnetic fields generated by the proposed power lines far exceed safe levels for human exposure, posing significant risks to residents, particularly those living within close proximity to the installation site.

Residents living in close proximity to these high power lines are at greater risk. I have gone through several medical and scientific research papers published on this matter that support our concern on this matter.
Here are a few links for reference to some such research articles:

https://www.ncbi.nlm.nih.gov/pmc/articles/PMC10590107/
https://www.hydroone.com/poweroutagesandsafety_/corporatehealthandsafety_/EMFs/Transmission_Line_EMF_Fields.pdf
https://www.emrss.com/blogs/emr-shielding-solutions-blogs/what-are-safe-levels-of-emf

As a quick overview from these please see below:

The magnetic field generated by the high power lines is way beyond safe levels for humans. Here is a break up:

- 115kV power transmission line has a Mean Magnetic Field (mG) of 6.5 at a distance of <50 feet.
- 230kV power transmission line has a Mean Magnetic Field (mG) of 19.5 at a distance of <50 feet. (ref. Link2)

As the project stands today, the first row of houses in Mission Gardens on Lafayette Street will be less than 50 feet from the proposed installation point per Route A of these poles.The safe value of magnetic field around humans is 0.7mg (ref. Link3) per numbers listed above, it's evident that residents in close proximity will be exposed to very high unsafe levels of EMF. This will have a significant impact to all the residents within 50-75 feet. As mentioned ,more reference to various NIH research articles on Pubmed can also be provided if needed to reinforce the concerns.

While I am speaking up as a resident of Mission Gardens, there are many other houses and apartment complexes along and near Lafayette St. whose residents will also be impacted by the unsafe levels of EMF.
Even a small risk is substantial for public health safety and can and should not be ignored by authorities; we need to err on the side of caution.

Increased Risk for Catastrophic Accidents and Fire Hazards: The proposed route intersects with an already congested utility zone along Lafayette Street, heightening the risk of accidents and fire hazards, especially given the proximity to existing railway lines, residential buildings, and heavy vehicular traffic.

Impact on Home Insurance Costs: The addition of high-power transmission lines in front of residences introduces additional risk factors that could prompt insurance companies to raise premiums further, exacerbating the already soaring home insurance costs in the Bay Area.

Property Value Concerns: The aesthetic and health-related concerns associated with the proposed power lines could adversely affect property values in our community, posing a significant concern for homeowners who have invested substantially in their properties.

Aesthetic Impact: The installation of large electric poles and wires would detract from the visual appeal of our neighborhood, undermining the pride we take in our well-maintained homes and attractive streetscapes.

Complexity and Inconvenience: The construction and maintenance of these power lines could disrupt our daily lives, leading to noise pollution, road closures, and restricted access to homes. Moreover, frequent power outages and service interruptions may result from ongoing maintenance activities.

Exploring Alternatives: We urge the city to explore alternative solutions such as upgrading existing lines or implementing underground power lines, despite potentially higher upfront costs. These alternatives offer long-term benefits in terms of safety, reliability, and minimal aesthetic impact. Additionally, investigating advanced technologies and alternative routing options could help mitigate the adverse effects on our community.

I respectfully request a meeting with relevant city officials and representatives from the utility company to discuss these concerns in detail and explore viable solutions. Finding a balance between necessary infrastructure upgrades and safeguarding the health, safety, and aesthetic integrity of our community is imperative.

As a concerned resident of Santa Clara, and a member of a community directly affected by this proposal, I strongly oppose the installation of power lines in options A and B. I implore Silicon Valley Power to consider alternative options that prioritize public health and safety and minimize adverse impacts on Santa Clara residents.

Thank you for your attention to this pressing matter. I eagerly await your response and the opportunity to collaborate on finding a satisfactory resolution.

Amit Thakkar

1857 Silva Place, Santa Clara, CA 95054

408-655-1147 (M)

Missions Gardens Community, Santa Clara

Concerns Regarding Upcoming High Power Electric Wire Poles in Our Community (Mission Gardens)

Prithvi Arun <prithvi.arun@gmail.com>

Tue 5/28/2024 4:16 PM

To:NRS-KRS Project <NRS-KRS@aspeneg.com>;mayorandcouncil@santaclaraca.gov <mayorandcouncil@santaclaraca.gov>; info@siliconvalleypower.com <info@siliconvalleypower.com>;planningcommission@santaclaraca.gov <planningcommission@santaclaraca.gov>;dehweb@deh.sccgov.org <dehweb@deh.sccgov.org>;phinternet@phd.sccgov.org <phinternet@phd.sccgov.org>;AJackman@santaclaraca.gov <AJackman@santaclaraca.gov>;manager@santaclaraca.gov <manager@santaclaraca.gov>

To Whomsoever it may concern,

As a concerned resident of Santa Clara, I am writing to express our apprehension regarding the proposed installation route for high-power electric transmission lines and poles by Silicon Valley Power (SVP). This initiative is part of the project aimed at connecting the Northern Receiving Station (NRS) and Kifer Receiving Station (KRS).

Having reviewed the materials provided by your office and attended the recent public scoping meeting on May 23, 2024, I have delved into the details of the project. After careful consideration, I must voice my complete opposition to options A and B.

While acknowledging the necessity of upgrading the city's power infrastructure, there are several significant concerns that demand attention:

1. **Health Concerns**: The potential health risks associated with prolonged exposure to unsafe levels of electromagnetic fields (EMFs) emitted by these high-power electric lines are paramount. Numerous studies have indicated a possible correlation between EMF exposure and various health issues, including heightened risks of certain cancers and neurological disorders, especially in children and the elderly. I have extensively researched this topic and found compelling evidence supporting these concerns. For instance, there is extensive research supporting that magnetic fields generated by the proposed power lines far exceed safe levels for human exposure, posing significant risks to residents, particularly those living within close proximity to the installation site.

   Residents living in close proximity to these high power lines are at greater risk. I have gone through several medical and scientific research papers published on this matter that support our concern on this matter.
   Here are a few links for reference to some such research articles:

- https://www.ncbi.nlm.nih.gov/pmc/articles/PMC10590107/
- https://www.hydroone.com/poweroutagesandsafety_/corporatehealthandsafety_/EMFs/Transmission_Line_EMF_Fields.pdf
- https://www.emrss.com/blogs/emr-shielding-solutions-blogs/what-are-safe-levels-of-emf

As a quick overview from these please see below:

The magnetic field generated by the high power lines is way beyond safe levels for humans. Here is a break up:

- 115kV power transmission line has a Mean Magnetic Field (mG) of 6.5 at a distance of <50 feet.

- 230kV power transmission line has a Mean Magnetic Field (mG) of 19.5 at a distance of <50 feet. (ref. Link2)

As the project stands today, the first row of houses in Mission Gardens on Lafayette Street will be less than 50 feet from the proposed installation point per Route A of these poles.The safe value of magnetic field around humans is 0.7mg (ref. Link3) per numbers listed above, it's evident that residents in close proximity will be exposed to very high unsafe levels of EMF. This will have a significant impact to all the residents within 50-75 feet. As mentioned ,more reference to various NIH research articles on Pubmed can also be provided if needed to reinforce the concerns.

I am speaking up as a resident of Mission Gardens and being a homeowner living along Lafayette Street. Even a small risk is substantial for public health safety and can and should not be ignored by authorities; we need to err on the side of caution.

2. **Increased Risk for Catastrophic Accidents and Fire Hazards**: The proposed route intersects with an already congested utility zone along Lafayette Street, heightening the risk of accidents and fire hazards, especially given the proximity to existing railway lines, residential buildings, and heavy vehicular traffic.
3. **Impact on Home Insurance Costs**: The addition of high-power transmission lines in front of residences introduces additional risk factors that could prompt insurance companies to raise premiums further, exacerbating the already soaring home insurance costs in the Bay Area.
4. **Property Value Concerns**: The aesthetic and health-related concerns associated with the proposed power lines could adversely affect property values in our community, posing a significant concern for homeowners who have invested substantially in their properties.
5. **Aesthetic Impact**: The installation of large electric poles and wires would detract from the visual appeal of our neighborhood, undermining the pride we take in our well-maintained homes and attractive streetscapes.
6. **Complexity and Inconvenience**: The construction and maintenance of these power lines could disrupt our daily lives, leading to noise pollution, road closures, and restricted access to homes. Moreover, frequent power outages and service interruptions may result from ongoing maintenance activities.
7. **Exploring Alternatives**: We urge the city to explore alternative solutions such as upgrading existing lines or implementing underground power lines, despite potentially higher upfront costs. These alternatives offer long-term benefits in terms of safety, reliability, and minimal aesthetic impact. Additionally, investigating advanced technologies and alternative routing options could help mitigate the adverse effects on our community.

I respectfully request a meeting with relevant city officials and representatives from the utility company to discuss these concerns in detail and explore viable solutions. Finding a balance between necessary infrastructure upgrades and safeguarding the health, safety, and aesthetic integrity of our community is imperative.

As a concerned resident of Santa Clara, and a member of a community directly affected by this proposal, I strongly oppose the installation of power lines in options A and B. I implore Silicon Valley Power to consider alternative options that prioritize public health and safety and minimize adverse impacts on Santa Clara residents.

Thank you for your attention to this pressing matter. I eagerly await your response and the opportunity to collaborate on finding a satisfactory resolution.

Prithvi Arun
4473 Lafayette Street, Santa Clara, CA 95054
Mission Gardens

Concerns Regarding Upcoming High Power Electric Wire Poles in Our Community(Mission Gardens) for the upcoming SVP project connecting the Northern Receiving Station NRS to Kifer receiving station (KRS).

Gane Sugali <ganenaik@yahoo.com>

Mon 5/27/2024 2:55 PM

To:NRS-KRS Project <NRS-KRS@aspeneg.com>;mayorandcouncil@santaclaraca.gov <mayorandcouncil@santaclaraca.gov>; info@siliconvalleypower.com <info@siliconvalleypower.com>;planningcommission@santaclaraca.gov <planningcommission@santaclaraca.gov>
Cc:Gane Sugali <ganenaik@yahoo.com>;Ashwini Kumbavath <ashwini208@yahoo.com>

To Whomsoever it may concern,
As a concerned resident of Santa Clara, I am writing to express our apprehensions regarding the proposed installation route for high-power electric transmission lines and poles by Silicon Valley Power (SVP). This initiative is part of the project aimed at connecting the Northern Receiving Station (NRS) and Kifer Receiving Station (KRS).
Having reviewed the materials provided by your office and attended the recent public scoping meeting on May 23, 2024, I have delved into the details of the project. After careful consideration, I must voice my complete opposition to options A and B.
While acknowledging the necessity of upgrading the city's power infrastructure, there are several significant concerns that demand attention:
Health Concerns: The potential health risks associated with prolonged exposure to unsafe levels of electromagnetic fields (EMFs) emitted by these high-power electric lines are paramount. Numerous studies have indicated a possible correlation between EMF exposure and various health issues, including heightened risks of certain cancers and neurological disorders, especially in children and the elderly. I have extensively researched this topic and found compelling evidence supporting these concerns. For instance, there is extensive research supporting that magnetic fields generated by the proposed power lines far exceed safe levels for human exposure, posing significant risks to residents, particularly those living within close proximity to the installation site.
Residents living in close proximity to these high power lines are at greater risk. I have gone through several medical and scientific research papers published on this matter that support our concern on this matter.
Here are a few links for reference to some such research articles:

https://www.ncbi.nlm.nih.gov/pmc/articles/PMC10590107/
https://www.hydroone.com/poweroutagesandsafety_/corporatehealthandsafety_/EMFs/Transmission_Line_EMF_Fields.pdf
https://www.emrss.com/blogs/emr-shielding-solutions-blogs/what-are-safe-levels-of-emf

As a quick overview from these please see below:

The magnetic field generated by the high power lines is way beyond safe levels for humans. Here is a break up:
· 115kV power transmission line has a Mean Magnetic Field (mG) of 6.5 at a distance of <50 feet.
· 230kV power transmission line has a Mean Magnetic Field (mG) of 19.5 at a distance of <50 feet. (ref. Link2)

As the project stands today, the first row of houses in Mission Gardens on Lafayette Street will be less than 50 feet from the proposed installation point per Route A of these poles.The safe value of magnetic field around humans is 0.7mg (ref. Link3) per numbers listed above, it's evident that residents in close proximity will be exposed to very high unsafe levels of EMF. This will have a significant impact to all the residents within 50-75 feet. As mentioned ,more reference to various NIH research articles on Pubmed can also be provided if needed to reinforce the concerns.

While I am speaking up as a resident of Mission Gardens, there are many other houses and apartment complexes along and near Lafayette St. whose residents will also be impacted by the unsafe levels of EMF.
Even a small risk is substantial for public health safety and can and should not be ignored by authorities; we need to err on the side of caution.
Increased Risk for Catastrophic Accidents and Fire Hazards: The proposed route intersects with an already congested utility zone along Lafayette Street, heightening the risk of accidents and fire hazards, especially given the proximity to existing railway lines, residential buildings, and heavy vehicular traffic.
Impact on Home Insurance Costs: The addition of high-power transmission lines in front of residences introduces additional risk factors that could prompt insurance companies to raise premiums further, exacerbating the already soaring home insurance costs in the Bay Area.
Property Value Concerns: The aesthetic and health-related concerns associated with the proposed power lines could adversely affect property values in our community, posing a significant concern for homeowners who have invested substantially in their properties.
Aesthetic Impact: The installation of large electric poles and wires would detract from the visual appeal of our neighborhood, undermining the pride we take in our well-maintained homes and attractive streetscapes.
Complexity and Inconvenience: The construction and maintenance of these power lines could disrupt our daily lives, leading to noise pollution, road closures, and restricted access to homes. Moreover, frequent power outages and service interruptions may result from

ongoing maintenance activities.
Exploring Alternatives: We urge the city to explore alternative solutions such as upgrading existing lines or implementing underground power lines, despite potentially higher upfront costs. These alternatives offer long-term benefits in terms of safety, reliability, and minimal aesthetic impact. Additionally, investigating advanced technologies and alternative routing options could help mitigate the adverse effects on our community.
I respectfully request a meeting with relevant city officials and representatives from the utility company to discuss these concerns in detail and explore viable solutions. Finding a balance between necessary infrastructure upgrades and safeguarding the health, safety, and aesthetic integrity of our community is imperative.
As a concerned resident of Santa Clara, and a member of a community directly affected by this proposal, I strongly oppose the installation of power lines in options A and B. I implore Silicon Valley Power to consider alternative options that prioritize public health and safety and minimize adverse impacts on Santa Clara residents.
Thank you for your attention to this pressing matter. I eagerly await your response and the opportunity to collaborate on finding a satisfactory resolution.

Gane Sugali
1921 Silva place Santa Clara 95054
4086214804
Mission Garden community

Concerns Regarding Upcoming High Power Electric Wire Poles in Our Community(Mission Gardens) for the upcoming SVP project connecting the Northern Receiving Station NRS to Kifer receiving station (KRS).

Lini Kuriyan <linikuriyan@gmail.com>

Tue 5/28/2024 10:58 PM

To:NRS-KRS Project <NRS-KRS@aspeneg.com>;mayorandcouncil@santaclaraca.gov <mayorandcouncil@santaclaraca.gov>;info@siliconvalleypower.com <info@siliconvalleypower.com>; planningcommission@santaclaraca.gov <planningcommission@santaclaraca.gov>;manager@santaclaraca.gov <manager@santaclaraca.gov>;ajackman@santaclaraca.gov <ajackman@santaclaraca.gov>

To Whomsoever it may concern,

As a concerned resident of Santa Clara, I am writing to express our apprehensions regarding the proposed installation route for high-power electric transmission lines and poles by Silicon Valley Power (SVP). This initiative is part of the project aimed at connecting the Northern Receiving Station (NRS) and Kifer Receiving Station (KRS).

Having reviewed the materials provided by your office and attended the recent public scoping meeting on May 23, 2024, I have delved into the details of the project. After careful consideration, I must voice my complete opposition to options A and B.

While acknowledging the necessity of upgrading the city's power infrastructure, there are several significant concerns that demand attention:

1. **Health Concerns**: The potential health risks associated with prolonged exposure to unsafe levels of electromagnetic fields (EMFs) emitted by these high-power

   Residents living in close proximity to these high power lines are at greater risk. I have gone through several medical and scientific research papers published on this matter that support our concern on this matter.
   Here are a few links for reference to some such research articles:

- https://www.ncbi.nlm.nih.gov/pmc/articles/PMC10590107/
- https://www.hydroone.com/poweroutagesandsafety_/corporatehealthandsafety_/EMFs/Transmission_Line_EMF_Fields.pdf
- https://www.emrss.com/blogs/emr-shielding-solutions-blogs/what-are-safe-levels-of-emf

   As a quick overview from these please see below:

   The magnetic field generated by the high power lines is way beyond safe levels for humans. Here is a break up:
   - 115kV power transmission line has a Mean Magnetic Field (mG) of 6.5 at a distance of <50 feet.
   - 230kV power transmission line has a Mean Magnetic Field (mG) of 19.5 at a distance of <50 feet. (ref. Link2)

   As the project stands today, the first row of houses in Mission Gardens on Lafayette Street will be less than 50 feet from the proposed installation point per Route A of these poles.The safe value of magnetic field around humans is 0.7mg (ref. Link3) per numbers listed above, it's evident that residents in close proximity will be exposed to very high unsafe levels of EMF. This will have a significant impact to all the residents within 50-75 feet. As mentioned ,more reference to various NIH research articles on Pubmed can also be provided if needed to reinforce the concerns.

   While I am speaking up as a resident of Mission Gardens, there are many other houses and apartment complexes along and near Lafayette St. whose residents will also be impacted by the unsafe levels of EMF.
   Even a small risk is substantial for public health safety and can and should not be ignored by authorities; we need to err on the side of caution.

2. **Increased Risk for Catastrophic Accidents and Fire Hazards**: The proposed route intersects with an already congested utility zone along Lafayette Street, he
3. **Impact on Home Insurance Costs**: The addition of high-power transmission lines in front of residences introduces additional risk factors that could prompt insu
4. **Property Value Concerns**: The aesthetic and health-related concerns associated with the proposed power lines could adversely affect property values in our co
5. **Aesthetic Impact**: The installation of large electric poles and wires would detract from the visual appeal of our neighborhood, undermining the pride we take in c
6. **Complexity and Inconvenience**: The construction and maintenance of these power lines could disrupt our daily lives, leading to noise pollution, road closures,
7. **Exploring Alternatives**: We urge the city to explore alternative solutions such as upgrading existing lines or implementing underground power lines, despite pot

I respectfully request a meeting with relevant city officials and representatives from the utility company to discuss these concerns in detail and explore viable solutions. Finding a balance between necessary infrastructure upgrades and safeguarding the health, safety, and aesthetic integrity of our community is imperative.

As a concerned resident of Santa Clara, and a member of a community directly affected by this proposal, I strongly oppose the installation of power lines in options A and B. I implore Silicon Valley Power to consider alternative options that prioritize public health and safety and minimize adverse impacts on Santa Clara residents.

Thank you for your attention to this pressing matter. I eagerly await your response and the opportunity to collaborate on finding a satisfactory resolution.

Lini Kuriyan
4479 Moulin Pl, Santa Clara - 95054
408 368 9436
Mission Gardens

Concerns Regarding Upcoming High Power Electric Wire Poles in Our Community(Mission Gardens) for the upcoming SVP project connecting the Northern Receiving Station NRS to Kifer receiving station (KRS)

Ramya V <ramya.may11th@gmail.com>

Wed 5/29/2024 10:48 AM

To:NRS-KRS Project <NRS-KRS@aspeneg.com>;mayorandcouncil@santaclaraca.gov <mayorandcouncil@santaclaraca.gov>; info@siliconvalleypower.com <info@siliconvalleypower.com>;planningcommission@santaclaraca.gov <planningcommission@santaclaraca.gov>;manager@santaclaraca.gov <manager@santaclaraca.gov>; AJackman@santaclaraca.gov <AJackman@santaclaraca.gov>

Subject: Concerns Regarding Upcoming High Power Electric Wire Poles in Our Community(Mission Gardens) for the upcoming SVP project connecting the Northern Receiving Station NRS to Kifer receiving station (KRS).

To Whomsoever it may concern,

As a concerned resident of Santa Clara, I am writing to express our apprehensions regarding the proposed installation route for high-power electric transmission lines and poles by Silicon Valley Power (SVP). This initiative is part of the project aimed at connecting the Northern Receiving Station (NRS) and Kifer Receiving Station (KRS).

Having reviewed the materials provided by your office and attended the recent public scoping meeting on May 23, 2024, I have delved into the details of the project. After careful consideration, I must voice my complete opposition to options A and B.

While acknowledging the necessity of upgrading the city's power infrastructure, there are several significant concerns that demand attention:

1. **Health Concerns**: The potential health risks associated with prolonged exposure to unsafe levels of electromagnetic fields (EMFs) emitted by these high-power electric lines are paramount. Numerous studies have indicated a possible correlation between EMF exposure and various health issues, including heightened risks of certain cancers and neurological disorders, especially in children and the elderly. I have extensively researched this topic and found compelling evidence supporting these concerns. For instance, there is extensive research supporting that magnetic fields generated by the proposed power lines far exceed safe levels for human exposure, posing significant risks to residents, particularly those living within close proximity to the installation site.

   Residents living in close proximity to these high power lines are at greater risk. I have gone through several medical and scientific research papers published on this matter that support our concern on this matter.
   Here are a few links for reference to some such research articles:

- https://www.ncbi.nlm.nih.gov/pmc/articles/PMC10590107/
- https://www.hydroone.com/poweroutagesandsafety_/corporatehealthandsafety_/EMFs/Transmission_Line_EMF_Fields.pdf
- https://www.emrss.com/blogs/emr-shielding-solutions-blogs/what-are-safe-levels-of-emf

As a quick overview from these please see below:

The magnetic field generated by the high power lines is way beyond safe levels for humans. Here is a break up:

- 115kV power transmission line has a Mean Magnetic Field (mG) of 6.5 at a distance of <50 feet.
- 230kV power transmission line has a Mean Magnetic Field (mG) of 19.5 at a distance of <50 feet. (ref. Link2)

As the project stands today, the first row of houses in Mission Gardens on Lafayette Street will be less than 50 feet from the proposed installation point per Route A of these poles.The safe value of magnetic field around humans is 0.7mg (ref. Link3) per numbers listed above, it's evident that residents in close proximity will be exposed to very high unsafe levels of EMF. This will have a significant impact to all the residents within 50-75 feet. As mentioned ,more reference to various NIH research articles on Pubmed can also be provided if needed to reinforce the concerns.

While I am speaking up as a resident of Mission Gardens, there are many other houses and apartment complexes along and near Lafayette St. whose residents will also be impacted by the unsafe levels of EMF.
Even a small risk is substantial for public health safety and can and should not be ignored by authorities; we need to err on the side of caution.

2. **Increased Risk for Catastrophic Accidents and Fire Hazards**: The proposed route intersects with an already congested utility zone along Lafayette Street, heightening the risk of accidents and fire hazards, especially given the proximity to existing railway lines, residential buildings, and heavy vehicular traffic.
3. **Impact on Home Insurance Costs**: The addition of high-power transmission lines in front of residences introduces additional risk factors that could prompt insurance companies to raise premiums further, exacerbating the already soaring home insurance costs in the Bay Area.
4. **Property Value Concerns**: The aesthetic and health-related concerns associated with the proposed power lines could adversely affect property values in our community, posing a significant concern for homeowners who have invested substantially in their properties.
5. **Aesthetic Impact**: The installation of large electric poles and wires would detract from the visual appeal of our neighborhood, undermining the pride we take in our well-maintained homes and attractive streetscapes.
6. **Complexity and Inconvenience**: The construction and maintenance of these power lines could disrupt our daily lives, leading to noise pollution, road closures, and restricted access to homes. Moreover, frequent power outages and service interruptions may result from ongoing maintenance activities.
7. **Exploring Alternatives**: We urge the city to explore alternative solutions such as upgrading existing lines or implementing underground power lines, despite potentially higher upfront costs. These alternatives offer long-term benefits in terms of safety, reliability, and minimal aesthetic impact. Additionally, investigating advanced technologies and alternative routing options could help mitigate the adverse effects on our community.

I respectfully request a meeting with relevant city officials and representatives from the utility company to discuss these concerns in detail and explore viable solutions. Finding a balance between necessary infrastructure upgrades and safeguarding the health, safety, and aesthetic integrity of our community is imperative.

As a concerned resident of Santa Clara, and a member of a community directly affected by this proposal, I strongly oppose the installation of power lines in options A and B. I implore Silicon Valley Power to consider alternative options that prioritize public health and safety and minimize adverse impacts on Santa Clara residents.

Thank you for your attention to this pressing matter. I eagerly await your response and the opportunity to collaborate on finding a satisfactory resolution.

Sincerely,

Ramiya Venkatachalam
4497 Lafayette St, Santa Clara, CA - 95051
ramya.may11th@gmail.com
Mission Gardens, Santa Clara

Concerns Regarding Upcoming High Power Electric Wire Poles in Our Community(Mission Gardens) for the upcoming SVP project connecting the Northern Receiving Station NRS to Kifer receiving station (KRS).

MEHUL SURESH JAIN <mehulsj162@gmail.com>

Wed 5/29/2024 11:01 AM

To:NRS-KRS Project <NRS-KRS@aspeneg.com>;mayorandcouncil@santaclaraca.gov <mayorandcouncil@santaclaraca.gov>; info@siliconvalleypower.com <info@siliconvalleypower.com>;planningcommission@santaclaraca.gov <planningcommission@santaclaraca.gov>;manager@santaclaraca.gov <manager@santaclaraca.gov>

To Whomsoever it may concern,

As a concerned resident of Santa Clara, I am writing to express our apprehensions regarding the proposed installation route for high-power electric transmission lines and poles by Silicon Valley Power (SVP). This initiative is part of the project aimed at connecting the Northern Receiving Station (NRS) and Kifer Receiving Station (KRS).

Having reviewed the materials provided by your office and attended the recent public scoping meeting on May 23, 2024, I have delved into the details of the project. After careful consideration, I must voice my complete opposition to options A and B.

While acknowledging the necessity of upgrading the city's power infrastructure, there are several significant concerns that demand attention:

Health Concerns: The potential health risks associated with prolonged exposure to unsafe levels of electromagnetic fields (EMFs) emitted by these high-power electric lines are paramount. Numerous studies have indicated a possible correlation between EMF exposure and various health issues, including heightened risks of certain cancers and neurological disorders, especially in children and the elderly. I have extensively researched this topic and found compelling evidence supporting these concerns. For instance, there is extensive research supporting that magnetic fields generated by the proposed power lines far exceed safe levels for human exposure, posing significant risks to residents, particularly those living within close proximity to the installation site.

Residents living in close proximity to these high power lines are at greater risk. I have gone through several medical and scientific research papers published on this matter that support our concern on this matter.

Here are a few links for reference to some such research articles:

https://www.ncbi.nlm.nih.gov/pmc/articles/PMC10590107/

https://www.hydroone.com/poweroutagesandsafety_/corporatehealthandsafety_/EMFs/Transmission_Line_EMF_Fields.pdf

https://www.emrss.com/blogs/emr-shielding-solutions-blogs/what-are-safe-levels-of-emf

As a quick overview from these please see below:

The magnetic field generated by the high power lines is way beyond safe levels for humans. Here is a break up:

- 115kV power transmission line has a Mean Magnetic Field (mG) of

6.5 at a distance of <50 feet.

· 230kV power transmission line has a Mean Magnetic Field (mG) of 19.5 at a distance of <50 feet. (ref. Link2)

As the project stands today, the first row of houses in Mission Gardens on Lafayette Street will be less than 50 feet from the proposed installation point per Route A of these poles.The safe value of magnetic field around humans is 0.7mg (ref. Link3) per numbers listed above, it's evident that residents in close proximity will be exposed to very high unsafe levels of EMF. This will have a significant impact to all the residents within 50-75 feet. As mentioned ,more reference to various NIH research articles on Pubmed can also be provided if needed to reinforce the concerns.

While I am speaking up as a resident of Mission Gardens, there are many other houses and apartment complexes along and near Lafayette St. whose residents will also be impacted by the unsafe levels of EMF.

Even a small risk is substantial for public health safety and can and should not be ignored by authorities; we need to err on the side of caution.

Increased Risk for Catastrophic Accidents and Fire Hazards: The proposed route intersects with an already congested utility zone along Lafayette Street, heightening the risk of accidents and fire hazards, especially given the proximity to existing railway lines, residential buildings, and heavy vehicular traffic.

Impact on Home Insurance Costs: The addition of high-power transmission lines in front of residences introduces additional risk factors that could prompt insurance companies to raise premiums further, exacerbating the already soaring home insurance costs in the Bay Area.

Property Value Concerns: The aesthetic and health-related concerns associated with the proposed power lines could adversely affect property values in our community, posing a significant concern for homeowners who have invested substantially in their properties.

Aesthetic Impact: The installation of large electric poles and wires would detract from the visual appeal of our neighborhood, undermining the pride we take in our well-maintained homes and attractive streetscapes.

Complexity and Inconvenience: The construction and maintenance of these power lines could disrupt our daily lives, leading to noise pollution, road closures, and restricted access to homes. Moreover, frequent power outages and service interruptions may result from ongoing maintenance activities.

Exploring Alternatives: We urge the city to explore alternative solutions such as upgrading existing lines or implementing underground power lines, despite potentially higher upfront costs. These alternatives offer long-term benefits in terms of safety, reliability, and minimal aesthetic impact. Additionally, investigating advanced technologies and alternative routing options could help mitigate the adverse effects on our community.

I respectfully request a meeting with relevant city officials and representatives from the utility company to discuss these concerns in detail and explore viable solutions. Finding a balance between

necessary infrastructure upgrades and safeguarding the health, safety, and aesthetic integrity of our community is imperative.

As a concerned resident of Santa Clara, and a member of a community directly affected by this proposal, I strongly oppose the installation of power lines in options A and B. I implore Silicon Valley Power to consider alternative options that prioritize public health and safety and minimize adverse impacts on Santa Clara residents.

Thank you for your attention to this pressing matter. I eagerly await your response and the opportunity to collaborate on finding a satisfactory resolution.

Mehul Suresh Kumar Jain
2069 Garzoni Pl, Santa Clara, CA-95054
408-326-9386
Mission Gardens

Concerns for SVP project regarding NRS to KRS connection

Bharathi Sathiya <bharathisathiya@gmail.com>

Wed 5/29/2024 11:10 AM

To:NRS-KRS Project <NRS-KRS@aspeneg.com>;mayorandcouncil@santaclaraca.gov <mayorandcouncil@santaclaraca.gov>;info@siliconvalleypower.com <info@siliconvalleypower.com>; planningcommission@santaclaraca.gov <planningcommission@santaclaraca.gov>;manager@santaclaraca.gov <manager@santaclaraca.gov>;AJackman@SantaClaraCA.gov <AJackman@santaclaraca.gov>

Gardens) for the upcoming SVP project connecting the Northern Receiving Station NRS to Kifer receiving station (KRS).

To Whomsoever it may concern,

As a concerned resident of Santa Clara, I am writing to express our apprehensions regarding the proposed installation route for high-power electric transmission lines and poles by Silicon Valley Power (SVP). This initiative is part of the project aimed at connecting the Northern Receiving Station (NRS) and Kifer Receiving Station (KRS).

Having reviewed the materials provided by your office and attended the recent public scoping meeting on May 23, 2024, I have delved into the details of the project. After careful consideration, I must voice my complete opposition to options A and B.

While acknowledging the necessity of upgrading the city's power infrastructure, there are several significant concerns that demand attention:

1. **Health Concerns**: The potential health risks associated with prolonged exposure to unsafe levels of electromagnetic fields (EMFs) emitted by these high-power e

   Residents living in close proximity to these high power lines are at greater risk. I have gone through several medical and scientific research papers published on this matter that support our concern on this matter.
   Here are a few links for reference to some such research articles:

- https://www.ncbi.nlm.nih.gov/pmc/articles/PMC10590107/
- https://www.hydroone.com/poweroutagesandsafety_/corporatehealthandsafety_/EMFs/Transmission_Line_EMF_Fields.pdf
- https://www.emrss.com/blogs/emr-shielding-solutions-blogs/what-are-safe-levels-of-emf

   As a quick overview from these please see below:

   The magnetic field generated by the high power lines is way beyond safe levels for humans. Here is a break up:
   - 115kV power transmission line has a Mean Magnetic Field (mG) of 6.5 at a distance of <50 feet.
   - 230kV power transmission line has a Mean Magnetic Field (mG) of 19.5 at a distance of <50 feet. (ref. Link2)

   As the project stands today, the first row of houses in Mission Gardens on Lafayette Street will be less than 50 feet from the proposed installation point per Route A of these poles.The safe value of magnetic field around humans is 0.7mg (ref. Link3) per numbers listed above, it's evident that residents in close proximity will be exposed to very high unsafe levels of EMF. This will have a significant impact to all the residents within 50-75 feet. As mentioned ,more reference to various NIH research articles on Pubmed can also be provided if needed to reinforce the concerns.

   While I am speaking up as a resident of Mission Gardens, there are many other houses and apartment complexes along and near Lafayette St. whose residents will also be impacted by the unsafe levels of EMF.
   Even a small risk is substantial for public health safety and can and should not be ignored by authorities; we need to err on the side of caution.

2. **Increased Risk for Catastrophic Accidents and Fire Hazards**: The proposed route intersects with an already congested utility zone along Lafayette Street, heighte
3. **Impact on Home Insurance Costs**: The addition of high-power transmission lines in front of residences introduces additional risk factors that could prompt insur
4. **Property Value Concerns**: The aesthetic and health-related concerns associated with the proposed power lines could adversely affect property values in our com
5. **Aesthetic Impact**: The installation of large electric poles and wires would detract from the visual appeal of our neighborhood, undermining the pride we take in
6. **Complexity and Inconvenience**: The construction and maintenance of these power lines could disrupt our daily lives, leading to noise pollution, road closures, a
7. **Exploring Alternatives**: We urge the city to explore alternative solutions such as upgrading existing lines or implementing underground power lines, despite pote

I respectfully request a meeting with relevant city officials and representatives from the utility company to discuss these concerns in detail and explore viable solutions. Finding a balance between necessary infrastructure upgrades and safeguarding the health, safety, and aesthetic integrity of our community is imperative.

As a concerned resident of Santa Clara, and a member of a community directly affected by this proposal, I strongly oppose the installation of power lines in options A and B. I implore Silicon Valley Power to consider alternative options that prioritize public health and safety and minimize adverse impacts on Santa Clara residents.

Thank you for your attention to this pressing matter. I eagerly await your response and the opportunity to collaborate on finding a satisfactory resolution.

Bharathi Narayanan
1926 Garzoni Place, Santa Clara, CA 95054
6504506619
Mission Gardens Townhomes

Concerns for SVP project regarding NRS to KRS connection

Sathiya Narayanan <manubharathi@gmail.com>

Wed 5/29/2024 11:10 AM

To:NRS-KRS Project <NRS-KRS@aspeneg.com>;mayorandcouncil@santaclaraca.gov <mayorandcouncil@santaclaraca.gov>;info@siliconvalleypower.com <info@siliconvalleypower.com>; planningcommission@santaclaraca.gov <planningcommission@santaclaraca.gov>;manager@santaclaraca.gov <manager@santaclaraca.gov>;AJackman@SantaClaraCA.gov <AJackman@santaclaraca.gov>

Gardens) for the upcoming SVP project connecting the Northern Receiving Station NRS to Kifer receiving station (KRS).

To Whomsoever it may concern,

As a concerned resident of Santa Clara, I am writing to express our apprehensions regarding the proposed installation route for high-power electric transmission lines and poles by Silicon Valley Power (SVP). This initiative is part of the project aimed at connecting the Northern Receiving Station (NRS) and Kifer Receiving Station (KRS).

Having reviewed the materials provided by your office and attended the recent public scoping meeting on May 23, 2024, I have delved into the details of the project. After careful consideration, I must voice my complete opposition to options A and B.

While acknowledging the necessity of upgrading the city's power infrastructure, there are several significant concerns that demand attention:

1. **Health Concerns**: The potential health risks associated with prolonged exposure to unsafe levels of electromagnetic fields (EMFs) emitted by these high-power e

   Residents living in close proximity to these high power lines are at greater risk. I have gone through several medical and scientific research papers published on this matter that support our concern on this matter.
   Here are a few links for reference to some such research articles:

- https://www.ncbi.nlm.nih.gov/pmc/articles/PMC10590107/
- https://www.hydroone.com/poweroutagesandsafety_/corporatehealthandsafety_/EMFs/Transmission_Line_EMF_Fields.pdf
- https://www.emrss.com/blogs/emr-shielding-solutions-blogs/what-are-safe-levels-of-emf

   As a quick overview from these please see below:

   The magnetic field generated by the high power lines is way beyond safe levels for humans. Here is a break up:
   - 115kV power transmission line has a Mean Magnetic Field (mG) of 6.5 at a distance of <50 feet.
   - 230kV power transmission line has a Mean Magnetic Field (mG) of 19.5 at a distance of <50 feet. (ref. Link2)

   As the project stands today, the first row of houses in Mission Gardens on Lafayette Street will be less than 50 feet from the proposed installation point per Route A of these poles.The safe value of magnetic field around humans is 0.7mg (ref. Link3) per numbers listed above, it's evident that residents in close proximity will be exposed to very high unsafe levels of EMF. This will have a significant impact to all the residents within 50-75 feet. As mentioned ,more reference to various NIH research articles on Pubmed can also be provided if needed to reinforce the concerns.

   While I am speaking up as a resident of Mission Gardens, there are many other houses and apartment complexes along and near Lafayette St. whose residents will also be impacted by the unsafe levels of EMF.
   Even a small risk is substantial for public health safety and can and should not be ignored by authorities; we need to err on the side of caution.

2. **Increased Risk for Catastrophic Accidents and Fire Hazards**: The proposed route intersects with an already congested utility zone along Lafayette Street, heighte
3. **Impact on Home Insurance Costs**: The addition of high-power transmission lines in front of residences introduces additional risk factors that could prompt insur
4. **Property Value Concerns**: The aesthetic and health-related concerns associated with the proposed power lines could adversely affect property values in our com
5. **Aesthetic Impact**: The installation of large electric poles and wires would detract from the visual appeal of our neighborhood, undermining the pride we take in
6. **Complexity and Inconvenience**: The construction and maintenance of these power lines could disrupt our daily lives, leading to noise pollution, road closures, a
7. **Exploring Alternatives**: We urge the city to explore alternative solutions such as upgrading existing lines or implementing underground power lines, despite pote

I respectfully request a meeting with relevant city officials and representatives from the utility company to discuss these concerns in detail and explore viable solutions. Finding a balance between necessary infrastructure upgrades and safeguarding the health, safety, and aesthetic integrity of our community is imperative.

As a concerned resident of Santa Clara, and a member of a community directly affected by this proposal, I strongly oppose the installation of power lines in options A and B. I implore Silicon Valley Power to consider alternative options that prioritize public health and safety and minimize adverse impacts on Santa Clara residents.

Thank you for your attention to this pressing matter. I eagerly await your response and the opportunity to collaborate on finding a satisfactory resolution.

Manu Bharathi
1926 Garzoni Place, Santa Clara, CA 95054
6504506619
Mission Gardens Townhomes

My Solitude paints a canvas blank
When fresh images wait there eternally.

Concerns for SVP project regarding NRS to KRS connection

Sathiya Narayanan <sathiyakri@hotmail.com>

Wed 5/29/2024 11:11 AM

To:NRS-KRS Project <NRS-KRS@aspeneg.com>;mayorandcouncil@santaclaraca.gov <mayorandcouncil@santaclaraca.gov>; info@siliconvalleypower.com <info@siliconvalleypower.com>;planningcommission@santaclaraca.gov <planningcommission@santaclaraca.gov>;manager@santaclaraca.gov <manager@santaclaraca.gov>; AJackman@SantaClaraCA.gov <AJackman@SantaClaraCA.gov>

Subject: Concerns Regarding Upcoming High Power Electric Wire Poles in Our Community(Mission Gardens) for the upcoming SVP project connecting the Northern Receiving Station NRS to Kifer receiving station (KRS).

To Whomsoever it may concern,

As a concerned resident of Santa Clara, I am writing to express our apprehensions regarding the proposed installation route for high-power electric transmission lines and poles by Silicon Valley Power (SVP). This initiative is part of the project aimed at connecting the Northern Receiving Station (NRS) and Kifer Receiving Station (KRS).

Having reviewed the materials provided by your office and attended the recent public scoping meeting on May 23, 2024, I have delved into the details of the project. After careful consideration, I must voice my complete opposition to options A and B.

While acknowledging the necessity of upgrading the city's power infrastructure, there are several significant concerns that demand attention:

1. **Health Concerns**: The potential health risks associated with prolonged exposure to unsafe levels of electromagnetic fields (EMFs) emitted by these high-power electric lines are paramount. Numerous studies have indicated a possible correlation between EMF exposure and various health issues, including heightened risks of certain cancers and neurological disorders, especially in children and the elderly. I have extensively researched this topic and found compelling evidence supporting these concerns. For instance, there is extensive research supporting that magnetic fields generated by the proposed power lines far exceed safe levels for human exposure, posing significant risks to residents, particularly those living within close proximity to the installation site.

   Residents living in close proximity to these high power lines are at greater risk. I have gone through several medical and scientific research papers published on this matter that support our concern on this matter.
   Here are a few links for reference to some such research articles:

- https://www.ncbi.nlm.nih.gov/pmc/articles/PMC10590107/
- https://www.hydroone.com/poweroutagesandsafety_/corporatehealthandsafety_/EMFs/Transmission_Line_EMF_Fields.pdf
- https://www.emrss.com/blogs/emr-shielding-solutions-blogs/what-are-safe-levels-of-emf

As a quick overview from these please see below:

The magnetic field generated by the high power lines is way beyond safe levels for humans. Here is a break up:

- 115kV power transmission line has a Mean Magnetic Field (mG) of 6.5 at a distance of <50 feet.
- 230kV power transmission line has a Mean Magnetic Field (mG) of 19.5 at a distance of <50 feet. (ref. Link2)

As the project stands today, the first row of houses in Mission Gardens on Lafayette Street will be less than 50 feet from the proposed installation point per Route A of these poles.The safe value of magnetic field around humans is 0.7mg (ref. Link3) per numbers listed above, it's evident that residents in close proximity will be exposed to very high unsafe levels of EMF. This will have a significant impact to all the residents within 50-75 feet. As mentioned ,more reference to various NIH research articles on Pubmed can also be provided if needed to reinforce the concerns.

While I am speaking up as a resident of Mission Gardens, there are many other houses and apartment complexes along and near Lafayette St. whose residents will also be impacted by the unsafe levels of EMF.
Even a small risk is substantial for public health safety and can and should not be ignored by authorities; we need to err on the side of caution.

2. **Increased Risk for Catastrophic Accidents and Fire Hazards**: The proposed route intersects with an already congested utility zone along Lafayette Street, heightening the risk of accidents and fire hazards, especially given the proximity to existing railway lines, residential buildings, and heavy vehicular traffic.
3. **Impact on Home Insurance Costs**: The addition of high-power transmission lines in front of residences introduces additional risk factors that could prompt insurance companies to raise premiums further, exacerbating the already soaring home insurance costs in the Bay Area.
4. **Property Value Concerns**: The aesthetic and health-related concerns associated with the proposed power lines could adversely affect property values in our community, posing a significant concern for homeowners who have invested substantially in their properties.
5. **Aesthetic Impact**: The installation of large electric poles and wires would detract from the visual appeal of our neighborhood, undermining the pride we take in our well-maintained homes and attractive streetscapes.
6. **Complexity and Inconvenience**: The construction and maintenance of these power lines could disrupt our daily lives, leading to noise pollution, road closures, and restricted access to homes. Moreover, frequent power outages and service interruptions may result from ongoing maintenance activities.
7. **Exploring Alternatives**: We urge the city to explore alternative solutions such as upgrading existing lines or implementing underground power lines, despite potentially higher upfront costs. These alternatives offer long-term benefits in terms of safety, reliability, and minimal aesthetic impact. Additionally, investigating advanced technologies and alternative routing options could help mitigate the adverse effects on our community.

I respectfully request a meeting with relevant city officials and representatives from the utility company to discuss these concerns in detail and explore viable solutions. Finding a balance between necessary infrastructure upgrades and safeguarding the health, safety, and aesthetic integrity of our community is imperative.

As a concerned resident of Santa Clara, and a member of a community directly affected by this proposal, I strongly oppose the installation of power lines in options A and B. I implore Silicon Valley Power to consider alternative options that prioritize public health and safety and minimize adverse impacts on Santa Clara residents.

Thank you for your attention to this pressing matter. I eagerly await your response and the opportunity to collaborate on finding a satisfactory resolution.

Sathiya Narayanan
1926 Garzoni Place, Santa Clara, CA 95054
6504506619
Mission Gardens Townhomes

Always in Bhagavan

Sathiya

--

சும்மா இரு. Be Still.

Concerns Regarding new 115 kV power lines.

Cipson Jose <cipsonj@gmail.com>

Wed 5/29/2024 11:13 AM

To:NRS-KRS Project <NRS-KRS@aspeneg.com>;mayorandcouncil@santaclaraca.gov <mayorandcouncil@santaclaraca.gov>;info@siliconvalleypower.com <info@siliconvalleypower.com>; planningcommission@santaclaraca.gov <planningcommission@santaclaraca.gov>;manager@santaclaraca.gov <manager@santaclaraca.gov>

To Whomsoever it may concern,

As a concerned resident of Santa Clara, I am writing to express our apprehensions regarding the proposed installation route for high-power electric transmission lines and poles by Silicon Valley Power (SVP). This initiative is part of the project aimed at connecting the Northern Receiving Station (NRS) and Kifer Receiving Station (KRS).

Having reviewed the materials provided by your office and attended the recent public scoping meeting on May 23, 2024, I have delved into the details of the project. After careful consideration, I must voice my complete opposition to options A and B.

While acknowledging the necessity of upgrading the city's power infrastructure, there are several significant concerns that demand attention:

1. **Health Concerns**: The potential health risks associated with prolonged exposure to unsafe levels of electromagnetic fields (EMFs) emitted by these high-power
2. **Increased Risk for Catastrophic Accidents and Fire Hazards**: The proposed route intersects with an already congested utility zone along Lafayette Street, he
3. **Impact on Home Insurance Costs**: The addition of high-power transmission lines in front of residences introduces additional risk factors that could prompt insu
4. **Property Value Concerns**: The aesthetic and health-related concerns associated with the proposed power lines could adversely affect property values in our co
5. **Aesthetic Impact**: The installation of large electric poles and wires would detract from the visual appeal of our neighborhood, undermining the pride we take in c
6. **Complexity and Inconvenience**: The construction and maintenance of these power lines could disrupt our daily lives, leading to noise pollution, road closures,
7. **Exploring Alternatives**: We urge the city to explore alternative solutions such as upgrading existing lines or implementing underground power lines, despite pot

As a concerned resident of Santa Clara, and a member of a community directly affected by this proposal, I strongly oppose the installation of power lines in options A and B. I implore Silicon Valley Power to consider alternative options that prioritize public health and safety and minimize adverse impacts on Santa Clara residents.

Thank you for your attention to this pressing matter, and eagerly await your response.

Sincerely

Cipson Jose
2142 Payne Pl, Santa Clara
cipsonj@gmail.com
Payne Place Community

Concerns Regarding Upcoming High Power Electric Wire Poles in Our Community(Mission Gardens) for the upcoming SVP project connecting the Northern Receiving Station NRS to Kifer receiving station (KRS).

Mukil Narayanan <mukilnarayanan@gmail.com>

Wed 5/29/2024 11:14 AM

To:NRS-KRS Project <NRS-KRS@aspeneg.com>;mayorandcouncil@santaclaraca.gov <mayorandcouncil@santaclaraca.gov>; info@siliconvalleypower.com <info@siliconvalleypower.com>;planningcommission@santaclaraca.gov <planningcommission@santaclaraca.gov>;manager@santaclaraca.gov <manager@santaclaraca.gov>; AJackman@SantaClaraCA.gov <AJackman@santaclaraca.gov>

To Whomsoever it may concern,

As a concerned resident of Santa Clara, I am writing to express our apprehensions regarding the proposed installation route for high-power electric transmission lines and poles by Silicon Valley Power (SVP). This initiative is part of the project aimed at connecting the Northern Receiving Station (NRS) and Kifer Receiving Station (KRS).

Having reviewed the materials provided by your office and attended the recent public scoping meeting on May 23, 2024, I have delved into the details of the project. After careful consideration, I must voice my complete opposition to options A and B.

While acknowledging the necessity of upgrading the city's power infrastructure, there are several significant concerns that demand attention:

1. **Health Concerns**: The potential health risks associated with prolonged exposure to unsafe levels of electromagnetic fields (EMFs) emitted by these high-power electric lines are paramount. Numerous studies have indicated a possible correlation between EMF exposure and various health issues, including heightened risks of certain cancers and neurological disorders, especially in children and the elderly. I have extensively researched this topic and found compelling evidence supporting these concerns. For instance, there is extensive research supporting that magnetic fields generated by the proposed power lines far exceed safe levels for human exposure, posing significant risks to residents, particularly those living within close proximity to the installation site.

Residents living in close proximity to these high power lines are at greater risk. I have gone through several medical and scientific research papers published on this matter that support our concern on this matter.
Here are a few links for reference to some such research articles:

- https://www.ncbi.nlm.nih.gov/pmc/articles/PMC10590107/
- https://www.hydroone.com/poweroutagesandsafety_/corporatehealthandsafety_/EMFs/Transmission_Line_EMF_Fields.pdf
- https://www.emrss.com/blogs/emr-shielding-solutions-blogs/what-are-safe-levels-of-emf

As a quick overview from these please see below:

The magnetic field generated by the high power lines is way beyond safe levels for humans. Here is a break up:

- 115kV power transmission line has a Mean Magnetic Field (mG) of 6.5 at a distance of <50 feet.
- 230kV power transmission line has a Mean Magnetic Field (mG) of 19.5 at a distance of <50 feet. (ref. Link2)

As the project stands today, the first row of houses in Mission Gardens on Lafayette Street will be less than 50 feet from the proposed installation point per Route A of these poles.The safe value of magnetic field around humans is 0.7mg (ref. Link3) per numbers listed above, it's evident that residents in close proximity will be exposed to very high unsafe levels of EMF. This will have a significant impact to all the residents within 50-75 feet. As mentioned ,more reference to various NIH research articles on Pubmed can also be provided if needed to reinforce the concerns.

While I am speaking up as a resident of Mission Gardens, there are many other houses and apartment complexes along and near Lafayette St. whose residents will also be impacted by the unsafe levels of EMF.
Even a small risk is substantial for public health safety and can and should not be ignored by authorities; we need to err on the side of caution.

2. **Increased Risk for Catastrophic Accidents and Fire Hazards**: The proposed route intersects with an already congested utility zone along Lafayette Street, heightening the risk of accidents and fire hazards, especially given the proximity to existing railway lines, residential buildings, and heavy vehicular traffic.
3. **Impact on Home Insurance Costs**: The addition of high-power transmission lines in front of residences introduces additional risk factors that could prompt insurance companies to raise premiums further, exacerbating the already soaring home insurance costs in the Bay Area.
4. **Property Value Concerns**: The aesthetic and health-related concerns associated with the proposed power lines could adversely affect property values in our community, posing a significant concern for homeowners who have invested substantially in their properties.
5. **Aesthetic Impact**: The installation of large electric poles and wires would detract from the visual appeal of our neighborhood, undermining the pride we take in our well-maintained homes and attractive streetscapes.
6. **Complexity and Inconvenience**: The construction and maintenance of these power lines could disrupt our daily lives, leading to noise pollution, road closures, and restricted access to homes. Moreover, frequent power outages and service interruptions may result from ongoing maintenance activities.
7. **Exploring Alternatives**: We urge the city to explore alternative solutions such as upgrading existing lines or implementing underground power lines, despite potentially higher upfront costs. These alternatives offer long-term benefits in terms of safety, reliability, and minimal aesthetic

impact. Additionally, investigating advanced technologies and alternative routing options could help mitigate the adverse effects on our community.

I respectfully request a meeting with relevant city officials and representatives from the utility company to discuss these concerns in detail and explore viable solutions. Finding a balance between necessary infrastructure upgrades and safeguarding the health, safety, and aesthetic integrity of our community is imperative.

As a concerned resident of Santa Clara, and a member of a community directly affected by this proposal, I strongly oppose the installation of power lines in options A and B. I implore Silicon Valley Power to consider alternative options that prioritize public health and safety and minimize adverse impacts on Santa Clara residents.

Thank you for your attention to this pressing matter. I eagerly await your response and the opportunity to collaborate on finding a satisfactory resolution.

Mukil Narayanan
1926 Garzoni Place, Santa Clara, CA 95054
6692043779
Mission Gardens Townhomes

-Mukil Narayanan

Concerns Regarding Upcoming High Power Electric Wire Poles in Our Community(Mission Gardens) for the upcoming SVP project connecting the Northern Receiving Station NRS to Kifer receiving station (KRS)

Nandakumar Gopalakrishnan <nanda.kgk@gmail.com>

Wed 5/29/2024 11:25 AM

To:NRS-KRS Project <NRS-KRS@aspeneg.com>;mayorandcouncil@santaclaraca.gov <mayorandcouncil@santaclaraca.gov>; info@siliconvalleypower.com <info@siliconvalleypower.com>;planningcommission@santaclaraca.gov <planningcommission@santaclaraca.gov>;manager@santaclaraca.gov <manager@santaclaraca.gov>; AJackman@santaclaraca.gov <AJackman@santaclaraca.gov>

To Whomsoever it may concern,

As a concerned resident of Santa Clara, I am writing to express our apprehensions regarding the proposed installation route for high-power electric transmission lines and poles by Silicon Valley Power (SVP). This initiative is part of the project aimed at connecting the Northern Receiving Station (NRS) and Kifer Receiving Station (KRS).

Having reviewed the materials provided by your office and attended the recent public scoping meeting on May 23, 2024, I have delved into the details of the project. After careful consideration, I must voice my complete opposition to options A and B.

While acknowledging the necessity of upgrading the city's power infrastructure, there are several significant concerns that demand attention:

1. **Health Concerns**: The potential health risks associated with prolonged exposure to unsafe levels of electromagnetic fields (EMFs) emitted by these high-power electric lines are paramount. Numerous studies have indicated a possible correlation between EMF exposure and various health issues, including heightened risks of certain cancers and neurological disorders, especially in children and the elderly. I have extensively researched this topic and found compelling evidence supporting these concerns. For instance, there is extensive research supporting that magnetic fields generated by the proposed power lines far exceed safe levels for human exposure, posing significant risks to residents, particularly those living within close proximity to the installation site.

   Residents living in close proximity to these high power lines are at greater risk. I have gone through several medical and scientific research papers published on this matter that support our concern on this matter.
   Here are a few links for reference to some such research articles:

- https://www.ncbi.nlm.nih.gov/pmc/articles/PMC10590107/
- https://www.hydroone.com/poweroutagesandsafety_/corporatehealthandsafety_/EMFs/Transmission_Line_EMF_Fields.pdf
- https://www.emrss.com/blogs/emr-shielding-solutions-blogs/what-are-safe-levels-of-emf

   As a quick overview from these please see below:

   The magnetic field generated by the high power lines is way beyond safe levels for humans. Here is a break up:

- 115kV power transmission line has a Mean Magnetic Field (mG) of 6.5 at a distance of <50 feet.
- 230kV power transmission line has a Mean Magnetic Field (mG) of 19.5 at a distance of <50 feet. (ref. Link2)

As the project stands today, the first row of houses in Mission Gardens on Lafayette Street will be less than 50 feet from the proposed installation point per Route A of these poles.The safe value of magnetic field around humans is 0.7mg (ref. Link3) per numbers listed above, it's evident that residents in close proximity will be exposed to very high unsafe levels of EMF. This will have a significant impact to all the residents within 50-75 feet. As mentioned ,more reference to various NIH research articles on Pubmed can also be provided if needed to reinforce the concerns.

While I am speaking up as a resident of Mission Gardens, there are many other houses and apartment complexes along and near Lafayette St. whose residents will also be impacted by the unsafe levels of EMF.
Even a small risk is substantial for public health safety and can and should not be ignored by authorities; we need to err on the side of caution.

2. **Increased Risk for Catastrophic Accidents and Fire Hazards**: The proposed route intersects with an already congested utility zone along Lafayette Street, heightening the risk of accidents and fire hazards, especially given the proximity to existing railway lines, residential buildings, and heavy vehicular traffic.
3. **Impact on Home Insurance Costs**: The addition of high-power transmission lines in front of residences introduces additional risk factors that could prompt insurance companies to raise premiums further, exacerbating the already soaring home insurance costs in the Bay Area.
4. **Property Value Concerns**: The aesthetic and health-related concerns associated with the proposed power lines could adversely affect property values in our community, posing a significant concern for homeowners who have invested substantially in their properties.
5. **Aesthetic Impact**: The installation of large electric poles and wires would detract from the visual appeal of our neighborhood, undermining the pride we take in our well-maintained homes and attractive streetscapes.
6. **Complexity and Inconvenience**: The construction and maintenance of these power lines could disrupt our daily lives, leading to noise pollution, road closures, and restricted access to homes. Moreover, frequent power outages and service interruptions may result from ongoing maintenance activities.
7. **Exploring Alternatives**: We urge the city to explore alternative solutions such as upgrading existing lines or implementing underground power lines, despite potentially higher upfront costs. These alternatives offer long-term benefits in terms of safety, reliability, and minimal aesthetic impact. Additionally, investigating advanced technologies and alternative routing options could help mitigate the adverse effects on our community.

I respectfully request a meeting with relevant city officials and representatives from the utility company to discuss these concerns in detail and explore viable solutions. Finding a balance between necessary infrastructure upgrades and safeguarding the health, safety, and aesthetic integrity of our community is imperative.

As a concerned resident of Santa Clara, and a member of a community directly affected by this proposal, I strongly oppose the installation of power lines in options A and B. I implore Silicon Valley

Power to consider alternative options that prioritize public health and safety and minimize adverse impacts on Santa Clara residents.

Thank you for your attention to this pressing matter. I eagerly await your response and the opportunity to collaborate on finding a satisfactory resolution.

Sincerely,

Nandakumar Gopalakrishnan
4497 Lafayette St, Santa Clara, CA - 95054
nanda.kgk@gmail.com
Mission Gardens, Santa Clara

Concerns Regarding Upcoming High Power Electric Wire Poles in Our Community(Mission Gardens) for the upcoming SVP project connecting the Northern Receiving Station NRS to Kifer receiving station (KRS)

Swati Sinha <swati2sinha@gmail.com>

Thu 5/30/2024 8:20 AM

To:NRS-KRS Project <NRS-KRS@aspeneg.com>;mayorandcouncil@santaclaraca.gov <mayorandcouncil@santaclaraca.gov>;info@siliconvalleypower.com <info@siliconvalleypower.com>; planningcommission@santaclaraca.gov <planningcommission@santaclaraca.gov>;manager@santaclaraca.gov <manager@santaclaraca.gov>;AJackman@santaclaraca.gov <AJackman@santaclaraca.gov>

Dear Sir / Madam,

As a concerned resident of Santa Clara, I am writing to express our apprehensions regarding the proposed installation route for high-power electric transmission lines and poles by Silicon Valley Power (SVP). This initiative is part of the project aimed at connecting the Northern Receiving Station (NRS) and Kifer Receiving Station (KRS).

Having reviewed the materials provided by your office and attended the recent public scoping meeting on May 23, 2024, I have delved into the details of the project. After careful consideration, I must voice my complete opposition to options A and B.

While acknowledging the necessity of upgrading the city's power infrastructure, there are several significant concerns that demand attention:

1. **Health Concerns**: The potential health risks associated with prolonged exposure to unsafe levels of electromagnetic fields (EMFs) emitted by these high-power

   Residents living in close proximity to these high power lines are at greater risk. I have gone through several medical and scientific research papers published on this matter that support our concern on this matter.
   Here are a few links for reference to some such research articles:

- https://www.ncbi.nlm.nih.gov/pmc/articles/PMC10590107/
- https://www.hydroone.com/poweroutagesandsafety_/corporatehealthandsafety_/EMFs/Transmission_Line_EMF_Fields.pdf
- https://www.emrss.com/blogs/emr-shielding-solutions-blogs/what-are-safe-levels-of-emf

   As a quick overview from these please see below:

   The magnetic field generated by the high power lines is way beyond safe levels for humans. Here is a break up:
   - 115kV power transmission line has a Mean Magnetic Field (mG) of 6.5 at a distance of <50 feet.
   - 230kV power transmission line has a Mean Magnetic Field (mG) of 19.5 at a distance of <50 feet. (ref. Link2)

   As the project stands today, the first row of houses in Mission Gardens on Lafayette Street will be less than 50 feet from the proposed installation point per Route A of these poles.The safe value of magnetic field around humans is 0.7mg (ref. Link3) per numbers listed above, it's evident that residents in close proximity will be exposed to very high unsafe levels of EMF. This will have a significant impact to all the residents within 50-75 feet. As mentioned ,more reference to various NIH research articles on Pubmed can also be provided if needed to reinforce the concerns.

   While I am speaking up as a resident of Mission Gardens, there are many other houses and apartment complexes along and near Lafayette St. whose residents will also be impacted by the unsafe levels of EMF.
   Even a small risk is substantial for public health safety and can and should not be ignored by authorities; we need to err on the side of caution.

2. **Increased Risk for Catastrophic Accidents and Fire Hazards**: The proposed route intersects with an already congested utility zone along Lafayette Street, he
3. **Impact on Home Insurance Costs**: The addition of high-power transmission lines in front of residences introduces additional risk factors that could prompt insu
4. **Property Value Concerns**: The aesthetic and health-related concerns associated with the proposed power lines could adversely affect property values in our co
5. **Aesthetic Impact**: The installation of large electric poles and wires would detract from the visual appeal of our neighborhood, undermining the pride we take in c
6. **Complexity and Inconvenience**: The construction and maintenance of these power lines could disrupt our daily lives, leading to noise pollution, road closures,
7. **Exploring Alternatives**: We urge the city to explore alternative solutions such as upgrading existing lines or implementing underground power lines, despite pot

I respectfully request a meeting with relevant city officials and representatives from the utility company to discuss these concerns in detail and explore viable solutions. Finding a balance between necessary infrastructure upgrades and safeguarding the health, safety, and aesthetic integrity of our community is imperative.

As a concerned resident of Santa Clara, and a member of a community directly affected by this proposal, I strongly oppose the installation of power lines in options A and B. I implore Silicon Valley Power to consider alternative options that prioritize public health and safety and minimize adverse impacts on Santa Clara residents.

Thank you for your attention to this pressing matter. I eagerly await your response and the opportunity to collaborate on finding a satisfactory resolution.

Regards,
Swati Sinha (Contact - Mobile - 408 836 5498 email: swati2sinha@gmail.com)
4485 Lafayette Street, Santa Clara, CA 95054
Mission Garden Homes.

Concerns Regarding Upcoming High Power Electric Wire Poles in Our Community(Mission Gardens) for the upcoming SVP project connecting the Northern Receiving Station NRS to Kifer receiving station (KRS)

Prashant Tiwari <ptiwari2009@yahoo.com>

Wed 5/29/2024 11:40 AM

To:NRS-KRS Project <NRS-KRS@aspeneg.com>;mayorandcouncil@santaclaraca.gov <mayorandcouncil@santaclaraca.gov>; info@siliconvalleypower.com <info@siliconvalleypower.com>;planningcommission@santaclaraca.gov <planningcommission@santaclaraca.gov>;manager@santaclaraca.gov <manager@santaclaraca.gov>; AJackman@santaclaraca.gov <AJackman@santaclaraca.gov>

To Whomsoever it may concern,

As a concerned resident of Santa Clara, I am writing to express our apprehensions regarding the proposed installation route for high-power electric transmission lines and poles by Silicon Valley Power (SVP). This initiative is part of the project aimed at connecting the Northern Receiving Station (NRS) and Kifer Receiving Station (KRS).

Having reviewed the materials provided by your office and attended the recent public scoping meeting on May 23, 2024, I have delved into the details of the project. After careful consideration, I must voice my complete opposition to options A and B.

While acknowledging the necessity of upgrading the city's power infrastructure, there are several significant concerns that demand attention:

1. **Health Concerns**: The potential health risks associated with prolonged exposure to unsafe levels of electromagnetic fields (EMFs) emitted by these high-power electric lines are paramount. Numerous studies have indicated a possible correlation between EMF exposure and various health issues, including heightened risks of certain cancers and neurological disorders, especially in children and the elderly. I have extensively researched this topic and found compelling evidence supporting these concerns. For instance, there is extensive research supporting that magnetic fields generated by the proposed power lines far exceed safe levels for human exposure, posing significant risks to residents, particularly those living within close proximity to the installation site.

   Residents living in close proximity to these high power lines are at greater risk. I have gone through several medical and scientific research papers published on this matter that support our concern on this matter.
   Here are a few links for reference to some such research articles:

- https://www.ncbi.nlm.nih.gov/pmc/articles/PMC10590107/
- https://www.hydroone.com/poweroutagesandsafety_/corporatehealthandsafety_/EMFs/Transmission_Line_EMF_Fields.pdf
- https://www.emrss.com/blogs/emr-shielding-solutions-blogs/what-are-safe-levels-of-emf

   As a quick overview from these please see below:

   The magnetic field generated by the high power lines is way beyond safe levels for humans. Here is a break up:

   - 115kV power transmission line has a Mean Magnetic Field (mG) of 6.5 at a distance of <50 feet.

- 230kV power transmission line has a Mean Magnetic Field (mG) of 19.5 at a distance of <50 feet. (ref. Link2)

As the project stands today, the first row of houses in Mission Gardens on Lafayette Street will be less than 50 feet from the proposed installation point per Route A of these poles.The safe value of magnetic field around humans is 0.7mg (ref. Link3) per numbers listed above, it's evident that residents in close proximity will be exposed to very high unsafe levels of EMF. This will have a significant impact to all the residents within 50-75 feet. As mentioned ,more reference to various NIH research articles on Pubmed can also be provided if needed to reinforce the concerns.

While I am speaking up as a resident of Mission Gardens, there are many other houses and apartment complexes along and near Lafayette St. whose residents will also be impacted by the unsafe levels of EMF.
Even a small risk is substantial for public health safety and can and should not be ignored by authorities; we need to err on the side of caution.

2. **Increased Risk for Catastrophic Accidents and Fire Hazards**: The proposed route intersects with an already congested utility zone along Lafayette Street, heightening the risk of accidents and fire hazards, especially given the proximity to existing railway lines, residential buildings, and heavy vehicular traffic.
3. **Impact on Home Insurance Costs**: The addition of high-power transmission lines in front of residences introduces additional risk factors that could prompt insurance companies to raise premiums further, exacerbating the already soaring home insurance costs in the Bay Area.
4. **Property Value Concerns**: The aesthetic and health-related concerns associated with the proposed power lines could adversely affect property values in our community, posing a significant concern for homeowners who have invested substantially in their properties.
5. **Aesthetic Impact**: The installation of large electric poles and wires would detract from the visual appeal of our neighborhood, undermining the pride we take in our well-maintained homes and attractive streetscapes.
6. **Complexity and Inconvenience**: The construction and maintenance of these power lines could disrupt our daily lives, leading to noise pollution, road closures, and restricted access to homes. Moreover, frequent power outages and service interruptions may result from ongoing maintenance activities.
7. **Exploring Alternatives**: We urge the city to explore alternative solutions such as upgrading existing lines or implementing underground power lines, despite potentially higher upfront costs. These alternatives offer long-term benefits in terms of safety, reliability, and minimal aesthetic impact. Additionally, investigating advanced technologies and alternative routing options could help mitigate the adverse effects on our community.

I respectfully request a meeting with relevant city officials and representatives from the utility company to discuss these concerns in detail and explore viable solutions. Finding a balance between necessary infrastructure upgrades and safeguarding the health, safety, and aesthetic integrity of our community is imperative.

As a concerned resident of Santa Clara, and a member of a community directly affected by this proposal, I strongly oppose the installation of power lines in options A and B. I implore Silicon Valley Power to consider alternative options that prioritize public health and safety and minimize adverse impacts on Santa Clara residents.

Thank you for your attention to this pressing matter. I eagerly await your response and the opportunity to collaborate on finding a satisfactory resolution.

Dr. Prashant Tiwari
4489 Lafayette St, Santa Clara, CA 95054
Cell: 518-892-1551
Mission Gardens Community (Santa Clara Rivermark)

Concerns Regarding Upcoming High Power Electric Wire Poles in Our Community(Mission Gardens) for the upcoming SVP project connecting the Northern Receiving Station NRS to Kifer receiving station (KRS).

airradha <airradha@gmail.com>

Wed 5/29/2024 11:45 AM

To:NRS-KRS Project <NRS-KRS@aspeneg.com>;mayorandcouncil@santaclaraca.gov <mayorandcouncil@santaclaraca.gov>;info@siliconvalleypower.com <info@siliconvalleypower.com>; planningcommission@santaclaraca.gov <planningcommission@santaclaraca.gov>;manager@santaclaraca.gov <manager@santaclaraca.gov>;AJackman@santaclaraca.gov <AJackman@santaclaraca.gov>

To Whomsoever it may concern,

As a concerned resident of Santa Clara, I am writing to express our apprehensions regarding the proposed installation route for high-power electric transmission lines and poles by Silicon Valley Power (SVP). This initiative is part of the project aimed at connecting the Northern Receiving Station (NRS) and Kifer Receiving Station (KRS).

Having reviewed the materials provided by your office and attended the recent public scoping meeting on May 23, 2024, I have delved into the details of the project. After careful consideration, I must voice my complete opposition to options A and B.

While acknowledging the necessity of upgrading the city's power infrastructure, there are several significant concerns that demand attention:

1. **Health Concerns**: The potential health risks associated with prolonged exposure to unsafe levels of electromagnetic fields (EMFs) emitted by these high-power

   Residents living in close proximity to these high power lines are at greater risk. I have gone through several medical and scientific research papers published on this matter that support our concern on this matter.
   Here are a few links for reference to some such research articles:

- https://www.ncbi.nlm.nih.gov/pmc/articles/PMC10590107/
- https://www.hydroone.com/poweroutagesandsafety_/corporatehealthandsafety_/EMFs/Transmission_Line_EMF_Fields.pdf
- https://www.emrss.com/blogs/emr-shielding-solutions-blogs/what-are-safe-levels-of-emf

   As a quick overview from these please see below:

   The magnetic field generated by the high power lines is way beyond safe levels for humans. Here is a break up:
   - 115kV power transmission line has a Mean Magnetic Field (mG) of 6.5 at a distance of <50 feet.
   - 230kV power transmission line has a Mean Magnetic Field (mG) of 19.5 at a distance of <50 feet. (ref. Link2)

   As the project stands today, the first row of houses in Mission Gardens on Lafayette Street will be less than 50 feet from the proposed installation point per Route A of these poles.The safe value of magnetic field around humans is 0.7mg (ref. Link3) per numbers listed above, it's evident that residents in close proximity will be exposed to very high unsafe levels of EMF. This will have a significant impact to all the residents within 50-75 feet. As mentioned ,more reference to various NIH research articles on Pubmed can also be provided if needed to reinforce the concerns.

   While I am speaking up as a resident of Mission Gardens, there are many other houses and apartment complexes along and near Lafayette St. whose residents will also be impacted by the unsafe levels of EMF.
   Even a small risk is substantial for public health safety and can and should not be ignored by authorities; we need to err on the side of caution.

2. **Increased Risk for Catastrophic Accidents and Fire Hazards**: The proposed route intersects with an already congested utility zone along Lafayette Street, he
3. **Impact on Home Insurance Costs**: The addition of high-power transmission lines in front of residences introduces additional risk factors that could prompt insu
4. **Property Value Concerns**: The aesthetic and health-related concerns associated with the proposed power lines could adversely affect property values in our co
5. **Aesthetic Impact**: The installation of large electric poles and wires would detract from the visual appeal of our neighborhood, undermining the pride we take in c
6. **Complexity and Inconvenience**: The construction and maintenance of these power lines could disrupt our daily lives, leading to noise pollution, road closures,
7. **Exploring Alternatives**: We urge the city to explore alternative solutions such as upgrading existing lines or implementing underground power lines, despite pot

I respectfully request a meeting with relevant city officials and representatives from the utility company to discuss these concerns in detail and explore viable solutions. Finding a balance between necessary infrastructure upgrades and safeguarding the health, safety, and aesthetic integrity of our community is imperative.

As a concerned resident of Santa Clara, and a member of a community directly affected by this proposal, I strongly oppose the installation of power lines in options A and B. I implore Silicon Valley Power to consider alternative options that prioritize public health and safety and minimize adverse impacts on Santa Clara residents.

Thank you for your attention to this pressing matter. I eagerly await your response and the opportunity to collaborate on finding a satisfactory resolution.

Radhakrishna Yeluri
1810 Garzoni Pl
Santa Clara 95054
408-718-5789
Mission Gardens of Santa Clara

Concerns Regarding Upcoming High Power Electric Wire Poles in Our Community(Mission Gardens) for the upcoming SVP project connecting the Northern Receiving Station NRS to Kifer receiving station (KRS).

Radha <airradha@yahoo.com>

Wed 5/29/2024 11:45 AM

To:NRS-KRS Project <NRS-KRS@aspeneg.com>;mayorandcouncil@santaclaraca.gov <mayorandcouncil@santaclaraca.gov>; info@siliconvalleypower.com <info@siliconvalleypower.com>;planningcommission@santaclaraca.gov <planningcommission@santaclaraca.gov>;manager@santaclaraca.gov <manager@santaclaraca.gov>; AJackman@santaclaraca.gov <AJackman@santaclaraca.gov>

To Whomsoever it may concern,

As a concerned resident of Santa Clara, I am writing to express our apprehensions regarding the proposed installation route for high-power electric transmission lines and poles by Silicon Valley Power (SVP). This initiative is part of the project aimed at connecting the Northern Receiving Station (NRS) and Kifer Receiving Station (KRS).

Having reviewed the materials provided by your office and attended the recent public scoping meeting on May 23, 2024, I have delved into the details of the project. After careful consideration, I must voice my complete opposition to options A and B.

While acknowledging the necessity of upgrading the city's power infrastructure, there are several significant concerns that demand attention:

1. **Health Concerns**: The potential health risks associated with prolonged exposure to unsafe levels of electromagnetic fields (EMFs) emitted by these high-power electric lines are paramount. Numerous studies have indicated a possible correlation between EMF exposure and various health issues, including heightened risks of certain cancers and neurological disorders, especially in children and the elderly. I have extensively researched this topic and found compelling evidence supporting these concerns. For instance, there is extensive research supporting that magnetic fields generated by the proposed power lines far exceed safe levels for human exposure, posing significant risks to residents, particularly those living within close proximity to the installation site.

   Residents living in close proximity to these high power lines are at greater risk. I have gone through several medical and scientific research papers published on this matter that support our concern on this matter.
   Here are a few links for reference to some such research articles:

- https://www.ncbi.nlm.nih.gov/pmc/articles/PMC10590107/
- https://www.hydroone.com/poweroutagesandsafety_/corporatehealthandsafety_/EMFs/Transmission_Line_EMF_Fields.pdf
- https://www.emrss.com/blogs/emr-shielding-solutions-blogs/what-are-safe-levels-of-emf

  As a quick overview from these please see below:

  The magnetic field generated by the high power lines is way beyond safe levels for humans. Here is a break up:

- 115kV power transmission line has a Mean Magnetic Field (mG) of 6.5 at a distance of <50 feet.
- 230kV power transmission line has a Mean Magnetic Field (mG) of 19.5 at a distance of <50 feet. (ref. Link2)

As the project stands today, the first row of houses in Mission Gardens on Lafayette Street will be less than 50 feet from the proposed installation point per Route A of these poles.The safe value of magnetic field around humans is 0.7mg (ref. Link3) per numbers listed above, it's evident that residents in close proximity will be exposed to very high unsafe levels of EMF. This will have a significant impact to all the residents within 50-75 feet. As mentioned ,more reference to various NIH research articles on Pubmed can also be provided if needed to reinforce the concerns.

While I am speaking up as a resident of Mission Gardens, there are many other houses and apartment complexes along and near Lafayette St. whose residents will also be impacted by the unsafe levels of EMF.
Even a small risk is substantial for public health safety and can and should not be ignored by authorities; we need to err on the side of caution.

2. **Increased Risk for Catastrophic Accidents and Fire Hazards**: The proposed route intersects with an already congested utility zone along Lafayette Street, heightening the risk of accidents and fire hazards, especially given the proximity to existing railway lines, residential buildings, and heavy vehicular traffic.
3. **Impact on Home Insurance Costs**: The addition of high-power transmission lines in front of residences introduces additional risk factors that could prompt insurance companies to raise premiums further, exacerbating the already soaring home insurance costs in the Bay Area.
4. **Property Value Concerns**: The aesthetic and health-related concerns associated with the proposed power lines could adversely affect property values in our community, posing a significant concern for homeowners who have invested substantially in their properties.
5. **Aesthetic Impact**: The installation of large electric poles and wires would detract from the visual appeal of our neighborhood, undermining the pride we take in our well-maintained homes and attractive streetscapes.
6. **Complexity and Inconvenience**: The construction and maintenance of these power lines could disrupt our daily lives, leading to noise pollution, road closures, and restricted access to homes. Moreover, frequent power outages and service interruptions may result from ongoing maintenance activities.
7. **Exploring Alternatives**: We urge the city to explore alternative solutions such as upgrading existing lines or implementing underground power lines, despite potentially higher upfront costs. These alternatives offer long-term benefits in terms of safety, reliability, and minimal aesthetic impact. Additionally, investigating advanced technologies and alternative routing options could help mitigate the adverse effects on our community.

I respectfully request a meeting with relevant city officials and representatives from the utility company to discuss these concerns in detail and explore viable solutions. Finding a balance between necessary infrastructure upgrades and safeguarding the health, safety, and aesthetic integrity of our community is imperative.

As a concerned resident of Santa Clara, and a member of a community directly affected by this proposal, I strongly oppose the installation of power lines in options A and B. I implore Silicon Valley Power to consider alternative options that prioritize public health and safety and minimize adverse impacts on Santa Clara residents.

Thank you for your attention to this pressing matter. I eagerly await your response and the opportunity to collaborate on finding a satisfactory resolution.

Radhakrishna Yeluri
1810 Garzoni Pl
Santa Clara 95054
408-718-5789
Mission Gardens of Santa Clara

Concerns Regarding Upcoming High Power Electric Wire Poles in Our Community(Mission Gardens) for the upcoming SVP project connecting the Northern Receiving Station NRS to Kifer receiving station (KRS).

Jerin <jerin@jerin.me>

Wed 5/29/2024 11:59 AM

To:NRS-KRS Project <NRS-KRS@aspeneg.com>;mayorandcouncil@santaclaraca.gov <mayorandcouncil@santaclaraca.gov>; info@siliconvalleypower.com <info@siliconvalleypower.com>;planningcommission@santaclaraca.gov <planningcommission@santaclaraca.gov>;manager@santaclaraca.gov <manager@santaclaraca.gov>; AJackman@santaclaraca.gov <AJackman@santaclaraca.gov>

To Whomsoever it may concern,
As a concerned resident of Santa Clara, I am writing to express our apprehensions regarding the proposed installation route for high-power electric transmission lines and poles by Silicon Valley Power (SVP). This initiative is part of the project aimed at connecting the Northern Receiving Station (NRS) and Kifer Receiving Station (KRS).
Having reviewed the materials provided by your office and attended the recent public scoping meeting on May 23, 2024, I have delved into the details of the project. After careful consideration, I must voice my complete opposition to options A and B.
While acknowledging the necessity of upgrading the city's power infrastructure, there are several significant concerns that demand attention:
Health Concerns: The potential health risks associated with prolonged exposure to unsafe levels of electromagnetic fields (EMFs) emitted by these high-power electric lines are paramount. Numerous studies have indicated a possible correlation between EMF exposure and various health issues, including heightened risks of certain cancers and neurological disorders, especially in children and the elderly. I have extensively researched this topic and found compelling evidence supporting these concerns. For instance, there is extensive research supporting that magnetic fields generated by the proposed power lines far exceed safe levels for human exposure, posing significant risks to residents, particularly those living within close proximity to the installation site.
Residents living in close proximity to these high power lines are at greater risk. I have gone through several medical and scientific research papers published on this matter that support our concern on this matter.
Here are a few links for reference to some such research articles:

https://nam02.safelinks.protection.outlook.com/?url=https%3A%2F%2Fwww.ncbi.nlm.nih.gov%2Fpmc%2Farticles%2FPMC10590107%2F&data=05%7C02%7CNRS-KRS%40aspeneg.com%7C26f4a927de7f46e3eed208dc80115ef9%7Cf56a45392d8e4b0d8454a64203aa39d3%7C0%7C0%7C638526059964505163%7CUnknown%7CTWFpbGZsb3d8eyJWIjoiMC4wLjAwMDAiLCJQIjoiV2luMzIiLCJBTiI6Ik1haWwiLCJXVCI6Mn0%3D%7C60000%7C%7C%7C&sdata=2zU5mJiRMHucH32dbWubEHJpQwfeCTywRv0bfDwPLaY%3D&reserved=0
https://nam02.safelinks.protection.outlook.com/?url=https%3A%2F%2Fwww.hydroone.com%2Fpoweroutagesandsafety_%2Fcorporatehealthandsafety_%2FEMFs%2FTransmission_Line_EMF_Fields.pdf&data=05%7C02%7CNRS-KRS%40aspeneg.com%7C26f4a927de7f46e3eed208dc80115ef9%7Cf56a45392d8e4b0d8454a64203aa39d3%7C0%7C0%7C638526059964521213%7CUnknown%7CTWFpbGZsb3d8eyJWIjoiMC4wLjAwMDAiLCJQIjoiV2luMzIiLCJBTiI6Ik1haWwiLCJXVCI6Mn0%3D%7C60000%7C%7C%7C&sdata=msUpV6tA9gtr8DdwNPa%2BVH4mUgrN%2BEjEeQgKKQbb1Uc%3D&reserved=0
https://nam02.safelinks.protection.outlook.com/?

url=https%3A%2F%2Fwww.emrss.com%2Fblogs%2Femr-shielding-solutions-blogs%2Fwhat-are-safe-levels-of-emf&data=05%7C02%7CNRS-KRS%40aspeneg.com%7C26f4a927de7f46e3eed208dc80115ef9%7Cf56a45392d8e4b0d8454a64203aa39d3%7C0%7C0%7C638526059964527690%7CUnknown%7CTWFpbGZsb3d8eyJWIjoiMC4wLjAwMDAiLCJQIjoiV2luMzIiLCJBTiI6Ik1haWwiLCJXVCI6Mn0%3D%7C60000%7C%7C%7C&sdata=dIeK%2F9keeTyZV%2B7RgJ521BBvCUDyP8lmyhHGk6Jp3tM%3D&reserved=0

As a quick overview from these please see below:

The magnetic field generated by the high power lines is way beyond safe levels for humans. Here is a break up:

- 115kV power transmission line has a Mean Magnetic Field (mG) of 6.5 at a distance of <50 feet.
- 230kV power transmission line has a Mean Magnetic Field (mG) of 19.5 at a distance of <50 feet. (ref. Link2)

As the project stands today, the first row of houses in Mission Gardens on Lafayette Street will be less than 50 feet from the proposed installation point per Route A of these poles.The safe value of magnetic field around humans is 0.7mg (ref. Link3) per numbers listed above, it's evident that residents in close proximity will be exposed to very high unsafe levels of EMF. This will have a significant impact to all the residents within 50-75 feet. As mentioned ,more reference to various NIH research articles on Pubmed can also be provided if needed to reinforce the concerns.

While I am speaking up as a resident of Mission Gardens, there are many other houses and apartment complexes along and near Lafayette St. whose residents will also be impacted by the unsafe levels of EMF.
Even a small risk is substantial for public health safety and can and should not be ignored by authorities; we need to err on the side of caution.
Increased Risk for Catastrophic Accidents and Fire Hazards: The proposed route intersects with an already congested utility zone along Lafayette Street, heightening the risk of accidents and fire hazards, especially given the proximity to existing railway lines, residential buildings, and heavy vehicular traffic.
Impact on Home Insurance Costs: The addition of high-power transmission lines in front of residences introduces additional risk factors that could prompt insurance companies to raise premiums further, exacerbating the already soaring home insurance costs in the Bay Area.
Property Value Concerns: The aesthetic and health-related concerns associated with the proposed power lines could adversely affect property values in our community, posing a significant concern for homeowners who have invested substantially in their properties.
Aesthetic Impact: The installation of large electric poles and wires would detract from the visual appeal of our neighborhood, undermining the pride we take in our well-maintained homes and attractive streetscapes.
Complexity and Inconvenience: The construction and maintenance of these power lines could disrupt our daily lives, leading to noise pollution, road closures, and restricted access to homes. Moreover, frequent power outages and service interruptions may result from ongoing maintenance activities.
Exploring Alternatives: We urge the city to explore alternative solutions such as upgrading existing lines or implementing underground power lines, despite potentially higher upfront costs. These alternatives offer long-term benefits in terms of safety, reliability, and minimal aesthetic impact. Additionally, investigating advanced technologies and alternative routing options could help mitigate the adverse effects on our community.
I respectfully request a meeting with relevant city officials and representatives from the utility company to discuss these concerns in detail and explore viable solutions. Finding a balance between necessary

infrastructure upgrades and safeguarding the health, safety, and aesthetic integrity of our community is imperative.

As a concerned resident of Santa Clara, and a member of a community directly affected by this proposal, I strongly oppose the installation of power lines in options A and B. I implore Silicon Valley Power to consider alternative options that prioritize public health and safety and minimize adverse impacts on Santa Clara residents.

Thank you for your attention to this pressing matter. I eagerly await your response and the opportunity to collaborate on finding a satisfactory resolution.

Jerin Joy
1910 Garzoni Place, Santa Clara, CA
4083064400
Missing Gardens Townhomes

Concerns Regarding new 115 kV power lines.

Punnya Cipson <punnyacipson@gmail.com>

Thu 5/30/2024 8:20 AM

To:NRS-KRS Project <NRS-KRS@aspeneg.com>;mayorandcouncil@santaclaraca.gov <mayorandcouncil@santaclaraca.gov>; info@siliconvalleypower.com <info@siliconvalleypower.com>;planningcommission@santaclaraca.gov <planningcommission@santaclaraca.gov>;manager@santaclaraca.gov <manager@santaclaraca.gov>

To Whomsoever it may concern,

As a concerned resident of Santa Clara, I am writing to express our apprehensions regarding the proposed installation route for high-power electric transmission lines and poles by Silicon Valley Power (SVP). This initiative is part of the project aimed at connecting the Northern Receiving Station (NRS) and Kifer Receiving Station (KRS).

Having reviewed the materials provided by your office and attended the recent public scoping meeting on May 23, 2024, I have delved into the details of the project. After careful consideration, I must voice my complete opposition to options A and B.

While acknowledging the necessity of upgrading the city's power infrastructure, there are several significant concerns that demand attention:

1. **Health Concerns**: The potential health risks associated with prolonged exposure to unsafe levels of electromagnetic fields (EMFs) emitted by these high-power electric lines are paramount. Numerous studies have indicated a possible correlation between EMF exposure and various health issues, including heightened risks of certain cancers and neurological disorders, especially in children and the elderly. I have extensively researched this topic and found compelling evidence supporting these concerns. For instance, there is extensive research supporting that magnetic fields generated by the proposed power lines far exceed safe levels for human exposure, posing significant risks to residents, particularly those living within close proximity to the installation site.
2. **Increased Risk for Catastrophic Accidents and Fire Hazards**: The proposed route intersects with an already congested utility zone along Lafayette Street, heightening the risk of accidents and fire hazards, especially given the proximity to existing railway lines, residential buildings, and heavy vehicular traffic.
3. **Impact on Home Insurance Costs**: The addition of high-power transmission lines in front of residences introduces additional risk factors that could prompt insurance companies to raise premiums further, exacerbating the already soaring home insurance costs in the Bay Area.
4. **Property Value Concerns**: The aesthetic and health-related concerns associated with the proposed power lines could adversely affect property values in our community, posing a significant concern for homeowners who have invested substantially in their properties.
5. **Aesthetic Impact**: The installation of large electric poles and wires would detract from the visual appeal of our neighborhood, undermining the pride we take in our well-maintained homes and attractive streetscapes.
6. **Complexity and Inconvenience**: The construction and maintenance of these power lines could disrupt our daily lives, leading to noise pollution, road closures, and restricted access to homes. Moreover, frequent power outages and service interruptions may result from ongoing maintenance activities.

7. **Exploring Alternatives**: We urge the city to explore alternative solutions such as upgrading existing lines or implementing underground power lines, despite potentially higher upfront costs. These alternatives offer long-term benefits in terms of safety, reliability, and minimal aesthetic impact. Additionally, investigating advanced technologies and alternative routing options could help mitigate the adverse effects on our community.

As a concerned resident of Santa Clara, and a member of a community directly affected by this proposal, I strongly oppose the installation of power lines in route A and B. I implore Silicon Valley Power to consider alternative options(route C) that prioritize public health and safety and minimize adverse impacts on Santa Clara residents.

Thank you for your attention to this pressing matter, and eagerly await your response.

Sincerely

Punnya Ann Joy
punnyacipson@gmail.com
Payne Place Community

Concerns Regarding Upcoming High Power Electric Wire Poles in Our Community(Mission Gardens) for the upcoming SVP project connecting the Northern Receiving Station NRS to Kifer receiving station (KRS).

satya <satyagbe@yahoo.com>
Wed 5/29/2024 1:01 PM
To:NRS-KRS Project <NRS-KRS@aspeneg.com>

To Whomsoever it may concern,

As a concerned resident of Santa Clara, I am writing to express our apprehensions regarding the proposed installation route for high-power electric transmission lines and poles by Silicon Valley Power (SVP). This initiative is part of the project aimed at connecting the Northern Receiving Station (NRS) and Kifer Receiving Station (KRS).

Having reviewed the materials provided by your office and attended the recent public scoping meeting on May 23, 2024, I have delved into the details of the project. After careful consideration, I must voice my complete opposition to options A and B.

While acknowledging the necessity of upgrading the city's power infrastructure, there are several significant concerns that demand attention:

1. **Health Concerns**: The potential health risks associated with prolonged exposure to unsafe levels of electromagnetic fields (EMFs) emitted by these high-power electric lines are paramount. Numerous studies have indicated a possible correlation between EMF exposure and various health issues, including heightened risks of certain cancers and neurological disorders, especially in children and the elderly. I have extensively researched this topic and found compelling evidence supporting these concerns. For instance, there is extensive research supporting that magnetic fields generated by the proposed power lines far exceed safe levels for human exposure, posing significant risks to residents, particularly those living within close proximity to the installation site.

   Residents living in close proximity to these high power lines are at greater risk. I have gone through several medical and scientific research papers published on this matter that support our concern on this matter.
   Here are a few links for reference to some such research articles:

- https://www.ncbi.nlm.nih.gov/pmc/articles/PMC10590107/
- https://www.hydroone.com/poweroutagesandsafety_/corporatehealthandsafety_/EMFs/Transmission_Line_EMF_Fields.pdf
- https://www.emrss.com/blogs/emr-shielding-solutions-blogs/what-are-safe-levels-of-emf

   As a quick overview from these please see below:

   The magnetic field generated by the high power lines is way beyond safe levels for humans. Here is a break up:

   - 115kV power transmission line has a Mean Magnetic Field (mG) of 6.5 at a distance of <50 feet.
   - 230kV power transmission line has a Mean Magnetic Field (mG) of 19.5 at a distance of <50 feet. (ref. Link2)

As the project stands today, the first row of houses in Mission Gardens on Lafayette Street will be less than 50 feet from the proposed installation point per Route A of these poles.The safe value of magnetic field around humans is 0.7mg (ref. Link3) per numbers listed above, it's evident that residents in close proximity will be exposed to very high unsafe levels of EMF. This will have a significant impact to all the residents within 50-75 feet. As mentioned ,more reference to various NIH research articles on Pubmed can also be provided if needed to reinforce the concerns.

While I am speaking up as a resident of Mission Gardens, there are many other houses and apartment complexes along and near Lafayette St. whose residents will also be impacted by the unsafe levels of EMF.
Even a small risk is substantial for public health safety and can and should not be ignored by authorities; we need to err on the side of caution.

2. **Increased Risk for Catastrophic Accidents and Fire Hazards**: The proposed route intersects with an already congested utility zone along Lafayette Street, heightening the risk of accidents and fire hazards, especially given the proximity to existing railway lines, residential buildings, and heavy vehicular traffic.
3. **Impact on Home Insurance Costs**: The addition of high-power transmission lines in front of residences introduces additional risk factors that could prompt insurance companies to raise premiums further, exacerbating the already soaring home insurance costs in the Bay Area.
4. **Property Value Concerns**: The aesthetic and health-related concerns associated with the proposed power lines could adversely affect property values in our community, posing a significant concern for homeowners who have invested substantially in their properties.
5. **Aesthetic Impact**: The installation of large electric poles and wires would detract from the visual appeal of our neighborhood, undermining the pride we take in our well-maintained homes and attractive streetscapes.
6. **Complexity and Inconvenience**: The construction and maintenance of these power lines could disrupt our daily lives, leading to noise pollution, road closures, and restricted access to homes. Moreover, frequent power outages and service interruptions may result from ongoing maintenance activities.
7. **Exploring Alternatives**: We urge the city to explore alternative solutions such as upgrading existing lines or implementing underground power lines, despite potentially higher upfront costs. These alternatives offer long-term benefits in terms of safety, reliability, and minimal aesthetic impact. Additionally, investigating advanced technologies and alternative routing options could help mitigate the adverse effects on our community.

I respectfully request a meeting with relevant city officials and representatives from the utility company to discuss these concerns in detail and explore viable solutions. Finding a balance between necessary infrastructure upgrades and safeguarding the health, safety, and aesthetic integrity of our community is imperative.

As a concerned resident of Santa Clara, and a member of a community directly affected by this proposal, I strongly oppose the installation of power lines in options A and B. I implore Silicon Valley Power to consider alternative options that prioritize public health and safety and minimize adverse impacts on Santa Clara residents.

Thank you for your attention to this pressing matter. I eagerly await your response and the opportunity to collaborate on finding a satisfactory resolution.

Satya Gandreddi
1933 Garzoni Place, Sanata Clara, CA-95054
satyagbe@yahoo.com
Mission Gardens

RE: Concerns Regarding Upcoming High Power Electric Wire Poles in Our Community(Mission Gardens) for the upcoming SVP project connecting the Northern Receiving Station NRS to Kifer receiving station (KRS).

Allie Jackman <AJackman@SantaClaraCA.gov>

Thu 5/30/2024 2:43 PM

To:satya <satyagbe@yahoo.com>
Cc:NRS-KRS Project <NRS-KRS@aspeneg.com>

Dear Concerned Resident of Santa Clara,

Thank you for submitting a comment on Silicon Valley Power's Northern Receiving Station (NRS) to Kifer Receiving Station (KRS) 115 kV Transmission Line Project. Your comment has been recorded and will be addressed and responded to in detail within the upcoming CEQA document (IS/MND). As a reminder, once the CEQA document is published, there will be another opportunity for public comment. We have added your information to our notification list for this project.

We look forward to continuing to work with you on this important project.

Best regards,

ALLIE JACKMAN, P.E.
Principal Electric Utility Engineer
D: 408-615-6639
881 Martin Avenue, Santa Clara, CA 95050
www.siliconvalleypower.com

From: satya <satyagbe@yahoo.com>
Sent: Wednesday, May 29, 2024 1:04 PM
To: Allie Jackman <AJackman@SantaClaraCA.gov>
Subject: Concerns Regarding Upcoming High Power Electric Wire Poles in Our Community(Mission Gardens) for the upcoming SVP project connecng the Northern R eceiving Staon NR S to Kifer receiving staon (KR S).

To Whomsoever it may concern,

As a concerned resident of Santa Clara, I am writing to express our apprehensions regarding the proposed installation route for high-power electric transmission lines and poles by Silicon Valley Power (SVP). This initiative is part of the project aimed at connecting the Northern Receiving Station (NRS) and Kifer Receiving Station (KRS).

Having reviewed the materials provided by your office and attended the recent public scoping meeting on May 23, 2024, I have delved into the details of the project. After careful consideration, I must voice my complete opposition to options A and B.

While acknowledging the necessity of upgrading the city's power infrastructure, there are several significant concerns that demand attention:

1. **Health Concerns**: The potential health risks associated with prolonged exposure to unsafe levels of electromagnetic fields (EMFs) emitted by these high-power electric lines are paramount. Numerous studies have indicated a possible correlation between EMF exposure and various health issues, including heightened risks of certain cancers and neurological disorders, especially in children and the elderly. I have extensively researched this topic and found compelling evidence supporting these concerns. For instance, there is extensive research supporting that magnetic fields generated by the proposed power lines far exceed safe levels for human exposure, posing significant risks to residents, particularly those living within close proximity to the installation site.

Residents living in close proximity to these high power lines are at greater risk. I have gone through several medical and scientific research papers published on this matter that support our concern on this matter.

Here are a few links for reference to some such research articles:

- https://www.ncbi.nlm.nih.gov/pmc/articles/PMC10590107/
- https://www.hydroone.com/poweroutagesandsafety_/corporatehealthandsafety_/EMFs/Transmission_Line_EMF_Fields.pdf
- https://www.emrss.com/blogs/emr-shielding-solutions-blogs/what-are-safe-levels-of-emf

As a quick overview from these please see below:

The magnetic field generated by the high power lines is way beyond safe levels for humans. Here is a break up:

· 115kV power transmission line has a Mean Magnetic Field (mG) of 6.5 at a distance of <50 feet.

· 230kV power transmission line has a Mean Magnetic Field (mG) of 19.5 at a distance of <50 feet. (ref. Link2)

As the project stands today, the first row of houses in Mission Gardens on Lafayette Street will be less than 50 feet from the proposed installation point per Route A of these poles.The safe value of magnetic field around humans is 0.7mg (ref. Link3) per numbers listed above, it's evident that residents in close proximity will be exposed to very high unsafe levels of EMF. This will have a significant impact to all the residents within 50-75 feet. As mentioned ,more reference to various NIH research articles on Pubmed can also be provided if needed to reinforce the concerns.

While I am speaking up as a resident of Mission Gardens, there are many other houses and apartment complexes along and near Lafayette St. whose residents will also be impacted by the unsafe levels of EMF.

Even a small risk is substantial for public health safety and can and should not be ignored by authorities; we need to err on the side of caution.

2. **Increased Risk for Catastrophic Accidents and Fire Hazards**: The proposed route intersects with an already congested utility zone along Lafayette Street, heightening the risk of accidents and fire hazards, especially given the proximity to existing railway lines, residential buildings, and heavy vehicular traffic.
3. **Impact on Home Insurance Costs**: The addition of high-power transmission lines in front of residences introduces additional risk factors that could prompt insurance companies to raise premiums further, exacerbating the already soaring home insurance costs in the Bay Area.
4. **Property Value Concerns**: The aesthetic and health-related concerns associated with the proposed power lines could adversely affect property values in our community, posing a significant concern for homeowners who have invested substantially in their properties.
5. **Aesthetic Impact**: The installation of large electric poles and wires would detract from the visual appeal of our neighborhood, undermining the pride we take in our well-maintained homes and attractive streetscapes.
6. **Complexity and Inconvenience**: The construction and maintenance of these power lines could disrupt our daily lives, leading to noise pollution, road closures, and restricted access to homes. Moreover, frequent power outages and service interruptions may result from ongoing maintenance activities.
7. **Exploring Alternatives**: We urge the city to explore alternative solutions such as upgrading existing lines or implementing underground power lines, despite potentially higher upfront costs. These alternatives offer long-term benefits in terms of safety, reliability, and minimal aesthetic impact. Additionally, investigating advanced technologies and alternative routing options could help mitigate the adverse effects on our community.

I respectfully request a meeting with relevant city officials and representatives from the utility company to discuss these concerns in detail and explore viable solutions. Finding a balance between necessary infrastructure upgrades and safeguarding the health, safety, and aesthetic integrity of our community is imperative.

As a concerned resident of Santa Clara, and a member of a community directly affected by this proposal, I strongly oppose the installation of power lines in options A and B. I implore Silicon Valley Power to consider alternative options that prioritize public health and safety and minimize adverse impacts on Santa Clara residents.

Thank you for your attention to this pressing matter. I eagerly await your response and the opportunity to collaborate on finding a satisfactory resolution.

Satya Gandreddi
1933 Garzoni Place, Santa Clara, CA-95054
satyagbe@yahoo.com
Mission Gardens

The information contained in this email may be privileged, confidential and exempt from disclosure under applicable law. The information is intended only for the use of the individual or entity to which it is addressed. If you are not the intended recipient or the employee or agent responsible to deliver it to the intended recipient, you are hereby notified that any use, dissemination, distribution or copying of this communication is strictly prohibited. If you have received this message in error, or are not the named recipient(s), please notify the sender immediately by reply email and delete this message from your computer. Thank you

Concerns Regarding Upcoming High Power Electric Wire Poles in Our Community(Mission Gardens) for the upcoming SVP project connecting the Northern Receiving Station NRS to Kifer receiving station (KRS).

Neethu Cherian <neethucherian86@gmail.com>

Wed 5/29/2024 1:20 PM

To:NRS-KRS Project <NRS-KRS@aspeneg.com>;mayorandcouncil@santaclaraca.gov <mayorandcouncil@santaclaraca.gov>; info@siliconvalleypower.com <info@siliconvalleypower.com>;planningcommission@santaclaraca.gov <planningcommission@santaclaraca.gov>;manager@santaclaraca.gov <manager@santaclaraca.gov>; AJackman@santaclaraca.gov <AJackman@santaclaraca.gov>

To Whomsoever it may concern,

As a concerned resident of Santa Clara, I am writing to express our apprehensions regarding the proposed installation route for high-power electric transmission lines and poles by Silicon Valley Power (SVP). This initiative is part of the project aimed at connecting the Northern Receiving Station (NRS) and Kifer Receiving Station (KRS).

Having reviewed the materials provided by your office and attended the recent public scoping meeting on May 23, 2024, I have delved into the details of the project. After careful consideration, I must voice my complete opposition to options A and B.

While acknowledging the necessity of upgrading the city's power infrastructure, there are several significant concerns that demand attention:

1. **Health Concerns**: The potential health risks associated with prolonged exposure to unsafe levels of electromagnetic fields (EMFs) emitted by these high-power electric lines are paramount. Numerous studies have indicated a possible correlation between EMF exposure and various health issues, including heightened risks of certain cancers and neurological disorders, especially in children and the elderly. I have extensively researched this topic and found compelling evidence supporting these concerns. For instance, there is extensive research supporting that magnetic fields generated by the proposed power lines far exceed safe levels for human exposure, posing significant risks to residents, particularly those living within close proximity to the installation site.

   Residents living in close proximity to these high power lines are at greater risk. I have gone through several medical and scientific research papers published on this matter that support our concern on this matter.
   Here are a few links for reference to some such research articles:

- https://www.ncbi.nlm.nih.gov/pmc/articles/PMC10590107/
- https://www.hydroone.com/poweroutagesandsafety_/corporatehealthandsafety_/EMFs/Transmission_Line_EMF_Fields.pdf
- https://www.emrss.com/blogs/emr-shielding-solutions-blogs/what-are-safe-levels-of-emf

   As a quick overview from these please see below:

   The magnetic field generated by the high power lines is way beyond safe levels for humans. Here is a break up:

   - 115kV power transmission line has a Mean Magnetic Field (mG) of 6.5 at a distance of <50 feet.

- 230kV power transmission line has a Mean Magnetic Field (mG) of 19.5 at a distance of <50 feet. (ref. Link2)

As the project stands today, the first row of houses in Mission Gardens on Lafayette Street will be less than 50 feet from the proposed installation point per Route A of these poles.The safe value of magnetic field around humans is 0.7mg (ref. Link3) per numbers listed above, it's evident that residents in close proximity will be exposed to very high unsafe levels of EMF. This will have a significant impact to all the residents within 50-75 feet. As mentioned ,more reference to various NIH research articles on Pubmed can also be provided if needed to reinforce the concerns.

While I am speaking up as a resident of Mission Gardens, there are many other houses and apartment complexes along and near Lafayette St. whose residents will also be impacted by the unsafe levels of EMF.
Even a small risk is substantial for public health safety and can and should not be ignored by authorities; we need to err on the side of caution.

2. **Increased Risk for Catastrophic Accidents and Fire Hazards**: The proposed route intersects with an already congested utility zone along Lafayette Street, heightening the risk of accidents and fire hazards, especially given the proximity to existing railway lines, residential buildings, and heavy vehicular traffic.
3. **Impact on Home Insurance Costs**: The addition of high-power transmission lines in front of residences introduces additional risk factors that could prompt insurance companies to raise premiums further, exacerbating the already soaring home insurance costs in the Bay Area.
4. **Property Value Concerns**: The aesthetic and health-related concerns associated with the proposed power lines could adversely affect property values in our community, posing a significant concern for homeowners who have invested substantially in their properties.
5. **Aesthetic Impact**: The installation of large electric poles and wires would detract from the visual appeal of our neighborhood, undermining the pride we take in our well-maintained homes and attractive streetscapes.
6. **Complexity and Inconvenience**: The construction and maintenance of these power lines could disrupt our daily lives, leading to noise pollution, road closures, and restricted access to homes. Moreover, frequent power outages and service interruptions may result from ongoing maintenance activities.
7. **Exploring Alternatives**: We urge the city to explore alternative solutions such as upgrading existing lines or implementing underground power lines, despite potentially higher upfront costs. These alternatives offer long-term benefits in terms of safety, reliability, and minimal aesthetic impact. Additionally, investigating advanced technologies and alternative routing options could help mitigate the adverse effects on our community.

I respectfully request a meeting with relevant city officials and representatives from the utility company to discuss these concerns in detail and explore viable solutions. Finding a balance between necessary infrastructure upgrades and safeguarding the health, safety, and aesthetic integrity of our community is imperative.

As a concerned resident of Santa Clara, and a member of a community directly affected by this proposal, I strongly oppose the installation of power lines in options A and B. I implore Silicon Valley Power to consider alternative options that prioritize public health and safety and minimize adverse impacts on Santa Clara residents.

Thank you for your attention to this pressing matter. I eagerly await your response and the opportunity to collaborate on finding a satisfactory resolution

Neethu Cherian
1910 Garzoni Place
Santa Clara, CA, 95054
Phone #: 408-431-9601
Mission Gardens

Concerns Regarding new 115 kV power lines

Lenny Le <lenny.le@gmail.com>

Wed 5/29/2024 1:46 PM

To:NRS-KRS Project <NRS-KRS@aspeneg.com>;mayorandcouncil@santaclaraca.gov <mayorandcouncil@santaclaraca.gov>; info@siliconvalleypower.com <info@siliconvalleypower.com>;planningcommission@santaclaraca.gov <planningcommission@santaclaraca.gov>;manager@santaclaraca.gov <manager@santaclaraca.gov>

To Whomsoever it may concern,

As a concerned resident of Santa Clara, I am writing to express our apprehensions regarding the proposed installation route for high-power electric transmission lines and poles by Silicon Valley Power (SVP). This initiative is part of the project aimed at connecting the Northern Receiving Station (NRS) and Kifer Receiving Station (KRS).

Having reviewed the materials provided by your office and attended the recent public scoping meeting on May 23, 2024, I have delved into the details of the project. After careful consideration, I must voice my complete opposition to options A and B.

While acknowledging the necessity of upgrading the city's power infrastructure, there are several significant concerns that demand attention:

1. **Health Concerns**: The potential health risks associated with prolonged exposure to unsafe levels of electromagnetic fields (EMFs) emitted by these high-power electric lines are paramount. Numerous studies have indicated a possible correlation between EMF exposure and various health issues, including heightened risks of certain cancers and neurological disorders, especially in children and the elderly. I have extensively researched this topic and found compelling evidence supporting these concerns. For instance, there is extensive research supporting that magnetic fields generated by the proposed power lines far exceed safe levels for human exposure, posing significant risks to residents, particularly those living within close proximity to the installation site.
2. **Increased Risk for Catastrophic Accidents and Fire Hazards**: The proposed route intersects with an already congested utility zone along Lafayette Street, heightening the risk of accidents and fire hazards, especially given the proximity to existing railway lines, residential buildings, and heavy vehicular traffic.
3. **Impact on Home Insurance Costs**: The addition of high-power transmission lines in front of residences introduces additional risk factors that could prompt insurance companies to raise premiums further, exacerbating the already soaring home insurance costs in the Bay Area.
4. **Property Value Concerns**: The aesthetic and health-related concerns associated with the proposed power lines could adversely affect property values in our community, posing a significant concern for homeowners who have invested substantially in their properties.
5. **Aesthetic Impact**: The installation of large electric poles and wires would detract from the visual appeal of our neighborhood, undermining the pride we take in our well-maintained homes and attractive streetscapes.
6. **Complexity and Inconvenience**: The construction and maintenance of these power lines could disrupt our daily lives, leading to noise pollution, road closures, and restricted access to homes. Moreover, frequent power outages and service interruptions may result from ongoing maintenance activities.
7. **Exploring Alternatives**: We urge the city to explore alternative solutions such as upgrading existing lines or implementing underground power lines, despite potentially higher upfront costs.

These alternatives offer long-term benefits in terms of safety, reliability, and minimal aesthetic impact. Additionally, investigating advanced technologies and alternative routing options could help mitigate the adverse effects on our community.

As a concerned resident of Santa Clara, and a member of a community directly affected by this proposal,

I strongly oppose the installation of power lines in route A and B. I implore Silicon Valley Power to consider alternative options(route C)

We strongly recommend utilizing the existing underground channel near Payne Place if Route A or B is chosen. For your reference, the Payne Place community already benefits from underground electric lines, eliminating the need for overhead lines in that area.

that prioritize public health and safety and minimize adverse impacts on Santa Clara residents.

Thank you for your attention to this pressing matter, and eagerly await your response.

Sincerely

Leonard Le
2146 Payne Pl, Santa Clara
lenny.le@gmail.com
Payne Place Community

Concerns Regarding new 115 kV power lines

Diem Nguyen <diemhieu@sbcglobal.net>

Wed 5/29/2024 1:55 PM

To:NRS-KRS Project <NRS-KRS@aspeneg.com>;mayorandcouncil@santaclaraca.gov <mayorandcouncil@santaclaraca.gov>; info@siliconvalleypower.com <info@siliconvalleypower.com>;planningcommission@santaclaraca.gov <planningcommission@santaclaraca.gov>;manager@santaclaraca.gov <manager@santaclaraca.gov>

To Whomsoever it may concern,

As a concerned resident of Santa Clara, I am writing to express our apprehensions regarding the proposed installation route for high-power electric transmission lines and poles by Silicon Valley Power (SVP). This initiative is part of the project aimed at connecting the Northern Receiving Station (NRS) and Kifer Receiving Station (KRS).

Having reviewed the materials provided by your office and attended the recent public scoping meeting on May 23, 2024, I have delved into the details of the project. After careful consideration, I must voice my complete opposition to options A and B.

While acknowledging the necessity of upgrading the city's power infrastructure, there are several significant concerns that demand attention:

1. **Health Concerns**: The potential health risks associated with prolonged exposure to unsafe levels of electromagnetic fields (EMFs) emitted by these high-power electric lines are paramount. Numerous studies have indicated a possible correlation between EMF exposure and various health issues, including heightened risks of certain cancers and neurological disorders, especially in children and the elderly. I have extensively researched this topic and found compelling evidence supporting these concerns. For instance, there is extensive research supporting that magnetic fields generated by the proposed power lines far exceed safe levels for human exposure, posing significant risks to residents, particularly those living within close proximity to the installation site.
2. **Increased Risk for Catastrophic Accidents and Fire Hazards**: The proposed route intersects with an already congested utility zone along Lafayette Street, heightening the risk of accidents and fire hazards, especially given the proximity to existing railway lines, residential buildings, and heavy vehicular traffic.
3. **Impact on Home Insurance Costs**: The addition of high-power transmission lines in front of residences introduces additional risk factors that could prompt insurance companies to raise premiums further, exacerbating the already soaring home insurance costs in the Bay Area.
4. **Property Value Concerns**: The aesthetic and health-related concerns associated with the proposed power lines could adversely affect property values in our community, posing a significant concern for homeowners who have invested substantially in their properties.
5. **Aesthetic Impact**: The installation of large electric poles and wires would detract from the visual appeal of our neighborhood, undermining the pride we take in our well-maintained homes and attractive streetscapes.
6. **Complexity and Inconvenience**: The construction and maintenance of these power lines could disrupt our daily lives, leading to noise pollution, road closures, and restricted access to homes. Moreover, frequent power outages and service interruptions may result from ongoing maintenance activities.
7. **Exploring Alternatives**: We urge the city to explore alternative solutions such as upgrading existing lines or implementing underground power lines, despite potentially higher upfront costs.

These alternatives offer long-term benefits in terms of safety, reliability, and minimal aesthetic impact. Additionally, investigating advanced technologies and alternative routing options could help mitigate the adverse effects on our community.

As a concerned resident of Santa Clara, and a member of a community directly affected by this proposal,

I strongly oppose the installation of power lines in route A and B. I implore Silicon Valley Power to consider alternative options(route C) that prioritize public health and safety and minimize adverse impacts on Santa Clara residents.

We strongly recommend utilizing the existing underground channel near Payne Place if Route A or B is chosen. For your reference, the Payne Place community already benefits from underground electric lines, eliminating the need for overhead lines in that area.

Thank you for your attention to this pressing matter, and eagerly await your response.

Sincerely

Diem Nguyen
2146 Payne Pl, Santa Clara
cipsonj@gmail.com
Payne Place Community

Re: Concerns Regarding Upcoming High Power Electric Wire Poles in Our Community (Mission Gardens) for the upcoming SVP project connecting the Northern Receiving Station NRS to Kifer receiving station (KRS)

Yuri Kleban π <yurikleban@google.com>

Thu 5/30/2024 4:06 PM

To:Allie Jackman <AJackman@santaclaraca.gov>
Cc:NRS-KRS Project <NRS-KRS@aspeneg.com>

Thank you for the update Allie, much appreciated. Let me know if I can provide any more info.

Yuri Kleban | Global Partnerships Tools - Global Product Lead Manager | Google |

I am part of the g2g coaching program in Google. Sign up at go/coachyuri

This email may be confidential or privileged. If you received this communication by mistake, please don't forward it to anyone else, please erase all copies and attachments, and please let me know that it went to the wrong person.

On Thu, May 30, 2024 at 2:44 PM Allie Jackman <AJackman@santaclaraca.gov> wrote:

> Dear Concerned Resident of Santa Clara,
>
> Thank you for submitting a comment on Silicon Valley Power's Northern Receiving Station (NRS) to Kifer Receiving Station (KRS) 115 kV Transmission Line Project. Your comment has been recorded and will be addressed and responded to in detail within the upcoming CEQA document (IS/MND). As a reminder, once the CEQA document is published, there will be another opportunity for public comment. We have added your information to our notification list for this project.
>
> We look forward to continuing to work with you on this important project.
>
> Best regards,
>
> **ALLIE JACKMAN, P.E.**
>
> Principal Electric Utility Engineer
>
> D: 408-615-6639
>
> 881 Martin Avenue, Santa Clara, CA 95050
>
> **www.siliconvalleypower.com**
>
> ---
>
> **From:** Yuri Kleban π <yurikleban@google.com>
> **Sent:** Wednesday, May 29, 2024 1:56 PM
> **To:** Allie Jackman <AJackman@SantaClaraCA.gov>

Subject: Re: Concerns Regarding Upcoming High Power Electric Wire Poles in Our Community (Mission Gardens) for the upcoming SVP project connecng the Northern R eceiving Staon NR S to Kifer receiving staon (KR S)

Hello there,

As a concerned resident of Santa Clara, I am writing to express our apprehensions regarding the proposed installation route for high-power electric transmission lines and poles by Silicon Valley Power (SVP). This initiative is part of the project aimed at connecting the Northern Receiving Station (NRS) and Kifer Receiving Station (KRS).

Having reviewed the materials provided by your office and attended the recent public scoping meeting on May 23, 2024, I have delved into the details of the project. After careful consideration, I must voice my complete opposition to options A and B.

While acknowledging the necessity of upgrading the city's power infrastructure, there are several significant concerns that demand attention:

1. **Health Concerns**: The potential health risks associated with prolonged exposure to unsafe levels of electromagnetic fields (EMFs) emitted by these high-power electric lines are paramount. Numerous studies have indicated a possible correlation between EMF exposure and various health issues, including heightened risks of certain cancers and neurological disorders, especially in children and the elderly. I have extensively researched this topic and found compelling evidence supporting these concerns. For instance, there is extensive research supporting that magnetic fields generated by the proposed power lines far exceed safe levels for human exposure, posing significant risks to residents, particularly those living within close proximity to the installation site.

   Residents living in close proximity to these high power lines are at greater risk. I have gone through several medical and scientific research papers published on this matter that support our concern on this matter.

   Here are a few links for reference to some such research articles:

- https://www.ncbi.nlm.nih.gov/pmc/articles/PMC10590107/
- https://www.hydroone.com/poweroutagesandsafety_/corporatehealthandsafety_/EMFs/Transmission_Line_EMF_Fields.pdf
- https://www.emrss.com/blogs/emr-shielding-solutions-blogs/what-are-safe-levels-of-emf

As a quick overview from these please see below:

The magnetic field generated by the high power lines is way beyond safe levels for humans. Here is a break up:

· 115kV power transmission line has a Mean Magnetic Field (mG) of 6.5 at a distance of <50 feet.

· 230kV power transmission line has a Mean Magnetic Field (mG) of 19.5 at a distance of <50 feet. (ref. Link2)

As the project stands today, the first row of houses in Mission Gardens on Lafayette Street will be less than 50 feet from the proposed installation point per Route A of these poles.The safe value of magnetic field around humans is 0.7mg (ref. Link3) per numbers listed above, it's evident that residents in close proximity will be exposed to very high unsafe levels of

EMF. This will have a significant impact to all the residents within 50-75 feet. As mentioned ,more reference to various NIH research articles on Pubmed can also be provided if needed to reinforce the concerns.

While I am speaking up as a resident of Mission Gardens, there are many other houses and apartment complexes along and near Lafayette St. whose residents will also be impacted by the unsafe levels of EMF.

Even a small risk is substantial for public health safety and can and should not be ignored by authorities; we need to err on the side of caution.

2. **Increased Risk for Catastrophic Accidents and Fire Hazards**: The proposed route intersects with an already congested utility zone along Lafayette Street, heightening the risk of accidents and fire hazards, especially given the proximity to existing railway lines, residential buildings, and heavy vehicular traffic.
3. **Impact on Home Insurance Costs**: The addition of high-power transmission lines in front of residences introduces additional risk factors that could prompt insurance companies to raise premiums further, exacerbating the already soaring home insurance costs in the Bay Area.
4. **Property Value Concerns**: The aesthetic and health-related concerns associated with the proposed power lines could adversely affect property values in our community, posing a significant concern for homeowners who have invested substantially in their properties.
5. **Aesthetic Impact**: The installation of large electric poles and wires would detract from the visual appeal of our neighborhood, undermining the pride we take in our well-maintained homes and attractive streetscapes.
6. **Complexity and Inconvenience**: The construction and maintenance of these power lines could disrupt our daily lives, leading to noise pollution, road closures, and restricted access to homes. Moreover, frequent power outages and service interruptions may result from ongoing maintenance activities.
7. **Exploring Alternatives**: We urge the city to explore alternative solutions such as upgrading existing lines or implementing underground power lines, despite potentially higher upfront costs. These alternatives offer long-term benefits in terms of safety, reliability, and minimal aesthetic impact. Additionally, investigating advanced technologies and alternative routing options could help mitigate the adverse effects on our community.

I respectfully request a meeting with relevant city officials and representatives from the utility company to discuss these concerns in detail and explore viable solutions. Finding a balance between necessary infrastructure upgrades and safeguarding the health, safety, and aesthetic integrity of our community is imperative.

As a concerned resident of Santa Clara, and a member of a community directly affected by this proposal, I strongly oppose the installation of power lines in options A and B. I implore Silicon Valley Power to consider alternative options that prioritize public health and safety and minimize adverse impacts on Santa Clara residents.

Thank you for your attention to this pressing matter. I eagerly await your response and the opportunity to collaborate on finding a satisfactory resolution.

Yuri Kleban | Global Partnerships Tools - Global Product Lead Manager | Google |

I am part of the g2g coaching program in Google. Sign up at go/coachyuri

> This email may be confidential or privileged. If you received this communication by mistake, please don't forward it to anyone else, please erase all copies and attachments, and please let me know that it went to the wrong person.

The information contained in this email may be privileged, confidential and exempt from disclosure under applicable law. The information is intended only for the use of the individual or entity to which it is addressed. If you are not the intended recipient or the employee or agent responsible to deliver it to the intended recipient, you are hereby notified that any use, dissemination, distribution or copying of this communication is strictly prohibited. If you have received this message in error, or are not the named recipient(s), please notify the sender immediately by reply email and delete this message from your computer. Thank you

Concerns Regarding new 115 kV power lines

Niaz Khan <nkhan1100@yahoo.com>

Wed 5/29/2024 2:15 PM

To:NRS-KRS Project <NRS-KRS@aspeneg.com>;mayorandcouncil@santaclaraca.gov <mayorandcouncil@santaclaraca.gov>; info@siliconvalleypower.com <info@siliconvalleypower.com>;planningcommission@santaclaraca.gov <planningcommission@santaclaraca.gov>;manager@santaclaraca.gov <manager@santaclaraca.gov>

To Whomsoever it may concern,

As a concerned resident of Santa Clara, I am writing to express our apprehensions regarding the proposed installation route for high-power electric transmission lines and poles by Silicon Valley Power (SVP). This initiative is part of the project aimed at connecting the Northern Receiving Station (NRS) and Kifer Receiving Station (KRS).

Having reviewed the materials provided by your office and attended the recent public scoping meeting on May 23, 2024, I have delved into the details of the project. After careful consideration, I must voice my complete opposition to options A and B.

While acknowledging the necessity of upgrading the city's power infrastructure, there are several significant concerns that demand attention:

1. **Health Concerns**: The potential health risks associated with prolonged exposure to unsafe levels of electromagnetic fields (EMFs) emitted by these high-power electric lines are paramount. Numerous studies have indicated a possible correlation between EMF exposure and various health issues, including heightened risks of certain cancers and neurological disorders, especially in children and the elderly. I have extensively researched this topic and found compelling evidence supporting these concerns. For instance, there is extensive research supporting that magnetic fields generated by the proposed power lines far exceed safe levels for human exposure, posing significant risks to residents, particularly those living within close proximity to the installation site.
2. **Increased Risk for Catastrophic Accidents and Fire Hazards**: The proposed route intersects with an already congested utility zone along Lafayette Street, heightening the risk of accidents and fire hazards, especially given the proximity to existing railway lines, residential buildings, and heavy vehicular traffic.
3. **Impact on Home Insurance Costs**: The addition of high-power transmission lines in front of residences introduces additional risk factors that could prompt insurance companies to raise premiums further, exacerbating the already soaring home insurance costs in the Bay Area.
4. **Property Value Concerns**: The aesthetic and health-related concerns associated with the proposed power lines could adversely affect property values in our community, posing a significant concern for homeowners who have invested substantially in their properties.
5. **Aesthetic Impact**: The installation of large electric poles and wires would detract from the visual appeal of our neighborhood, undermining the pride we take in our well-maintained homes and attractive streetscapes.
6. **Complexity and Inconvenience**: The construction and maintenance of these power lines could disrupt our daily lives, leading to noise pollution, road closures, and restricted access to homes. Moreover, frequent power outages and service interruptions may result from ongoing maintenance activities.
7. **Exploring Alternatives**: We urge the city to explore alternative solutions such as upgrading existing lines or implementing underground power lines, despite potentially higher upfront costs.

These alternatives offer long-term benefits in terms of safety, reliability, and minimal aesthetic impact. Additionally, investigating advanced technologies and alternative routing options could help mitigate the adverse effects on our community.

As a concerned resident of Santa Clara, and a member of a community directly affected by this proposal,

I strongly oppose the installation of power lines in route A and B. I implore Silicon Valley Power to consider alternative options (route C) that prioritize public health and safety and minimize adverse impacts on Santa Clara residents.

We strongly recommend utilizing the existing underground channel near Payne Place if Route A or B is chosen. For your reference, the Payne Place community already benefits from underground electric lines, eliminating the need for overhead lines in that area.

Thank you for your attention to this pressing matter, and eagerly await your response.

Sincerely

Niaz Khan
2134 Payne Place, Santa Clara, 95054
nkhan1100@yahoo.com
Payne Place Community

Concerns Regarding new 115 kV power lines.

gayathri ch <gayi3.ch1@gmail.com>

Thu 5/30/2024 8:20 AM

To:NRS-KRS Project <NRS-KRS@aspeneg.com>;mayorandcouncil@santaclaraca.gov <mayorandcouncil@santaclaraca.gov>; info@siliconvalleypower.com <info@siliconvalleypower.com>;planningcommission@santaclaraca.gov <planningcommission@santaclaraca.gov>;manager@santaclaraca.gov <manager@santaclaraca.gov>

Hi To Whomsoever it may concern,

As a concerned resident of Santa Clara, I am writing to express our apprehensions regarding the proposed installation route for high-power electric transmission lines and poles by Silicon Valley Power (SVP). This initiative is part of the project aimed at connecting the Northern Receiving Station (NRS) and Kifer Receiving Station (KRS).

Having reviewed the materials provided by your office and attended the recent public scoping meeting on May 23, 2024, I have delved into the details of the project. After careful consideration, I must voice my complete opposition to options A and B.

While acknowledging the necessity of upgrading the city's power infrastructure, there are several significant concerns that demand attention:

Health Concerns: The potential health risks associated with prolonged exposure to unsafe levels of electromagnetic fields (EMFs) emitted by these high-power electric lines are paramount. Numerous studies have indicated a possible correlation between EMF exposure and various health issues, including heightened risks of certain cancers and neurological disorders, especially in children and the elderly. I have extensively researched this topic and found compelling evidence supporting these concerns. For instance, there is extensive research supporting that magnetic fields generated by the proposed power lines far exceed safe levels for human exposure, posing significant risks to residents, particularly those living within close proximity to the installation site.

Increased Risk for Catastrophic Accidents and Fire Hazards: The proposed route intersects with an already congested utility zone along Lafayette Street, heightening the risk of accidents and fire hazards, especially given the proximity to existing railway lines, residential buildings, and heavy vehicular traffic.

Impact on Home Insurance Costs: The addition of high-power transmission lines in front of residences introduces additional risk factors that could prompt insurance companies to raise premiums further, exacerbating the already soaring home insurance costs in the Bay Area.

Property Value Concerns: The aesthetic and health-related concerns associated with the proposed power lines could adversely affect property values in our community, posing a significant concern for homeowners who have invested substantially in their properties.

Aesthetic Impact: The installation of large electric poles and wires would detract from the visual appeal of our neighborhood, undermining the pride we take in our well-maintained homes and attractive streetscapes.

Complexity and Inconvenience: The construction and maintenance of these power lines could disrupt our daily lives, leading to noise pollution, road closures, and restricted access to homes. Moreover, frequent power outages and service interruptions may result from ongoing maintenance activities.

Exploring Alternatives: We urge the city to explore alternative solutions such as upgrading existing lines or implementing underground power lines, despite potentially higher upfront costs. These alternatives offer long-term benefits in terms of safety, reliability, and minimal aesthetic impact. Additionally, investigating advanced technologies and alternative routing options could help mitigate the adverse effects on our community.

As a concerned resident of Santa Clara, and a member of a community directly affected by this proposal,

I strongly oppose the installation of power lines in route A and B. **I implore Silicon Valley Power to consider alternative options(route C)** that prioritize public health and safety and minimize adverse impacts on Santa Clara residents.

We strongly recommend utilizing the existing underground channel near Payne Place if Route A or B is chosen. For your reference, the Payne Place community already benefits from underground electric lines, eliminating the need for overhead lines in that area.

Thank you for your attention to this pressing matter, and eagerly await your response.

Sincerely

Gayathri Chebrolu

2102 Payne Pl, Santa Clara, CA - 95054
gayi3.ch1@gmail.com
Payne Place Community

Concerns Regarding new 115 kV power lines.

Anupama Raman <anupama_raman@yahoo.com>

Wed 5/29/2024 2:53 PM

To:NRS-KRS Project <NRS-KRS@aspeneg.com>;mayorandcouncil@santaclara.gov <mayorandcouncil@santaclara.gov>; info@siliconvalleypower.com <info@siliconvalleypower.com>;planningcommission@santaclaraca.gov <planningcommission@santaclaraca.gov>;manager@santaclaraca.gov <manager@santaclaraca.gov>

As a concerned resident of Santa Clara, and a member of a community directly affected by this proposal,

I strongly oppose the installation of power lines in route A and B. I implore Silicon Valley Power to consider alternative options(route C) that prioritize public health and safety and minimize adverse impacts on Santa Clara residents.

We strongly recommend utilizing the existing underground channel near Payne Place if Route A or B is chosen. For your reference, the Payne Place community already benefits from underground electric lines, eliminating the need for overhead lines in that area.

Thank you for your attention to this pressing matter, and eagerly await your response

Anupama swaminath

2126 Payne place

Santa Clara , CA-95054

Sent from my iPhone

Concerns Regarding new 115 kV power lines

Shaheen Khan <skhan66002@gmail.com>

Wed 5/29/2024 2:58 PM

To:NRS-KRS Project <NRS-KRS@aspeneg.com>;mayorandcouncil@santaclaraca.gov <mayorandcouncil@santaclaraca.gov>; info@siliconvalleypower.com <info@siliconvalleypower.com>;planningcommission@santaclaraca.gov <planningcommission@santaclaraca.gov>;manager@santaclaraca.gov <manager@santaclaraca.gov>

To Whomsoever it may concern,

As a concerned resident of Santa Clara, I am writing to express our apprehensions regarding the proposed installation route for high-power electric transmission lines and poles by Silicon Valley Power (SVP). This initiative is part of the project aimed at connecting the Northern Receiving Station (NRS) and Kifer Receiving Station (KRS).

Having reviewed the materials provided by your office and attended the recent public scoping meeting on May 23, 2024, I have delved into the details of the project. After careful consideration, I must voice my complete opposition to options A and B.

While acknowledging the necessity of upgrading the city's power infrastructure, there are several significant concerns that demand attention:

1. **Health Concerns**: The potential health risks associated with prolonged exposure to unsafe levels of electromagnetic fields (EMFs) emitted by these high-power electric lines are paramount. Numerous studies have indicated a possible correlation between EMF exposure and various health issues, including heightened risks of certain cancers and neurological disorders, especially in children and the elderly. I have extensively researched this topic and found compelling evidence supporting these concerns. For instance, there is extensive research supporting that magnetic fields generated by the proposed power lines far exceed safe levels for human exposure, posing significant risks to residents, particularly those living within close proximity to the installation site.
2. **Increased Risk for Catastrophic Accidents and Fire Hazards**: The proposed route intersects with an already congested utility zone along Lafayette Street, heightening the risk of accidents and fire hazards, especially given the proximity to existing railway lines, residential buildings, and heavy vehicular traffic.
3. **Impact on Home Insurance Costs**: The addition of high-power transmission lines in front of residences introduces additional risk factors that could prompt insurance companies to raise premiums further, exacerbating the already soaring home insurance costs in the Bay Area.
4. **Property Value Concerns**: The aesthetic and health-related concerns associated with the proposed power lines could adversely affect property values in our community, posing a significant concern for homeowners who have invested substantially in their properties.
5. **Aesthetic Impact**: The installation of large electric poles and wires would detract from the visual appeal of our neighborhood, undermining the pride we take in our well-maintained homes and attractive streetscapes.
6. **Complexity and Inconvenience**: The construction and maintenance of these power lines could disrupt our daily lives, leading to noise pollution, road closures, and restricted access to homes. Moreover, frequent power outages and service interruptions may result from ongoing maintenance activities.

7. **Exploring Alternatives**: We urge the city to explore alternative solutions such as upgrading existing lines or implementing underground power lines, despite potentially higher upfront costs. These alternatives offer long-term benefits in terms of safety, reliability, and minimal aesthetic impact. Additionally, investigating advanced technologies and alternative routing options could help mitigate the adverse effects on our community.

As a concerned resident of Santa Clara, and a member of a community directly affected by this proposal,

I strongly oppose the installation of power lines in route A and B. I implore Silicon Valley Power to consider alternative options (route C) that prioritize public health and safety and minimize adverse impacts on Santa Clara residents.

We strongly recommend utilizing the existing underground channel near Payne Place if Route A or B is chosen. For your reference, the Payne Place community already benefits from underground electric lines, eliminating the need for overhead lines in that area.

Thank you for your attention to this pressing matter, and eagerly await your response.

Sincerely

Shaheen Khan

2134 Payne Place, Santa Clara, 95054

skhan66002@gmail.com
Payne Place Community

new 115 kV power lines

abhi.pant@yahoo.com <abhi.pant@yahoo.com>

Wed 5/29/2024 3:43 PM

To:NRS-KRS Project <NRS-KRS@aspeneg.com>;mayorandcouncil@santaclaraca.gov <mayorandcouncil@santaclaraca.gov>; info@siliconvalleypower.com <info@siliconvalleypower.com>;planningcommission@santaclaraca.gov <planningcommission@santaclaraca.gov>;manager@santaclaraca.gov <manager@santaclaraca.gov>
Cc:rahulkhona@yahoo.com <rahulkhona@yahoo.com>

Re : proposed installation route for high-power electric transmission lines and poles by Silicon Valley Power (SVP). This initiative is part of the project aimed at connecting the Northern Receiving Station (NRS) and Kifer Receiving Station (KRS)

We live at 2138 Payne Place, Santa Clara and are **highly concerned about the new 115kV power lines passing through our area.**

Request: Please reconsider the installation of power lines in route A and B as that is detrimental to the residents at Payne Place. Please find another route.

Thank you,
Rahul Khona and Abhi Pant

Concerns Regarding Upcoming High Power Electric Wire Poles in Our Community(Mission Gardens) for the upcoming SVP project connecting the Northern Receiving Station NRS to Kifer receiving station (KRS).

Hima Sree MC <himahari@gmail.com>

Wed 5/29/2024 4:39 PM

To:NRS-KRS Project <NRS-KRS@aspeneg.com>

To Whomsoever it may concern,

As a concerned resident of Santa Clara, I am writing to express our apprehensions regarding the proposed installation route for high-power electric transmission lines and poles by Silicon Valley Power (SVP). This initiative is part of the project aimed at connecting the Northern Receiving Station (NRS) and Kifer Receiving Station (KRS).

Having reviewed the materials provided by your office and attended the recent public scoping meeting on May 23, 2024, I have delved into the details of the project. After careful consideration, I must voice my complete opposition to options A and B.

While acknowledging the necessity of upgrading the city's power infrastructure, there are several significant concerns that demand attention:

1. **Health Concerns**: The potential health risks associated with prolonged exposure to unsafe levels of electromagnetic fields (EMFs) emitted by these high-power electric lines are paramount. Numerous studies have indicated a possible correlation between EMF exposure and various health issues, including heightened risks of certain cancers and neurological disorders, especially in children and the elderly. I have extensively researched this topic and found compelling evidence supporting these concerns. For instance, there is extensive research supporting that magnetic fields generated by the proposed power lines far exceed safe levels for human exposure, posing significant risks to residents, particularly those living within close proximity to the installation site.

Residents living in close proximity to these high power lines are at greater risk. I have gone through several medical and scientific research papers published on this matter.
Here are a few links for reference to some such research articles:

- https://www.ncbi.nlm.nih.gov/pmc/articles/PMC10590107/
- https://www.hydroone.com/poweroutagesandsafety_/corporatehealthandsafety_/EMFs/Transmission_Line_EMF_Fields.pdf
- https://www.emrss.com/blogs/emr-shielding-solutions-blogs/what-are-safe-levels-of-emf

As a quick overview from these please see below:

The magnetic field generated by the high power lines is way beyond safe levels for humans. Here is a break up:

- 115kV power transmission line has a Mean Magnetic Field (mG) of 6.5 at a distance of <50 feet.
- 230kV power transmission line has a Mean Magnetic Field (mG) of 19.5 at a distance of <50 feet. (ref. Link2)

As the project stands today, the first row of houses in Mission Gardens on Lafayette Street will be less than 50 feet from the proposed installation point per Route A of these poles.The safe value of magnetic field around humans is 0.7mg (ref. Link3) per numbers listed above, it's evident that residents in close proximity will be exposed to very high unsafe levels of EMF. This will have a significant impact to all the residents within 50-75 feet. As mentioned ,more reference to various NIH research articles on Pubmed can also be provided if needed to reinforce the concerns.

While I am speaking up as a resident of Mission Gardens, there are many other houses and apartment complexes along and near Lafayette St. whose residents will also be impacted by the unsafe levels of EMF.
Even a small risk is substantial for public health safety and can and should not be ignored by authorities; we need to err on the side of caution.

1. **Increased Risk for Catastrophic Accidents and Fire Hazards**: The proposed route intersects with an already congested utility zone along Lafayette Street, heightening the risk of accidents and fire hazards, especially given the proximity to existing railway lines, residential buildings, and heavy vehicular traffic.
2. **Impact on Home Insurance Costs**: The addition of high-power transmission lines in front of residences introduces additional risk factors that could prompt insurance companies to raise premiums further, exacerbating the already soaring home insurance costs in the Bay Area.
3. **Property Value Concerns**: The aesthetic and health-related concerns associated with the proposed power lines could adversely affect property values in our community, posing a significant concern for homeowners who have invested substantially in their properties.
4. **Aesthetic Impact**: The installation of large electric poles and wires would detract from the visual appeal of our neighborhood, undermining the pride we take in our well-maintained homes and attractive streetscapes.
5. **Complexity and Inconvenience**: The construction and maintenance of these power lines could disrupt our daily lives, leading to noise pollution, road closures, and restricted access to homes. Moreover, frequent power outages and service interruptions may result from ongoing maintenance activities.
6. **Exploring Alternatives**: We urge the city to explore alternative solutions such as upgrading existing lines or implementing underground power lines, despite potentially higher upfront costs. These alternatives offer long-term benefits in terms of safety, reliability, and minimal aesthetic impact. Additionally, investigating advanced technologies and alternative routing options could help mitigate the adverse effects on our community.

I respectfully request a meeting with relevant city officials and representatives from the utility company to discuss these concerns in detail and explore viable solutions. Finding a balance between necessary infrastructure upgrades and safeguarding the health, safety, and aesthetic integrity of our community is imperative.

As a concerned resident of Santa Clara, and a member of a community directly affected by this proposal, I strongly oppose the installation of power lines in options A and B. I implore Silicon Valley Power to consider alternative options that prioritize public health and safety and minimize adverse impacts on Santa Clara residents.

Thank you for your attention to this pressing matter. I eagerly await your response and the opportunity to collaborate on finding a satisfactory resolution.

Himasree Chundi
1849 Silva place
Santa Clara, CA-95054
Mission Gardens

--

:-P **Smile.....And the world smiles with you** :-P

Concerns Regarding Upcoming High Power Electric Wire Poles in Our Community(Mission Gardens) for the upcoming SVP project connecting the Northern Receiving Station NRS to Kifer receiving station (KRS).

TheGoteFamily <sucheshri@gmail.com>

Wed 5/29/2024 4:46 PM

To:mayorandcouncil@santaclaraca.gov <mayorandcouncil@santaclaraca.gov>;info@siliconvalleypower.com <info@siliconvalleypower.com>;planningcommission@santaclaraca.gov <planningcommission@santaclaraca.gov>; manager@santaclaraca.gov <manager@santaclaraca.gov>;AJackman@santaclaraca.gov <AJackman@santaclaraca.gov>;NRS-KRS Project <NRS-KRS@aspeneg.com>

To Whomsoever it may concern,

As a concerned resident of Santa Clara, I am writing to express our apprehensions regarding the proposed installation route for high-power electric transmission lines and poles by Silicon Valley Power (SVP). This initiative is part of the project aimed at connecting the Northern Receiving Station (NRS) and Kifer Receiving Station (KRS).

Having reviewed the materials provided by your office and attended the recent public scoping meeting on May 23, 2024, I have delved into the details of the project. After careful consideration, I must voice my complete opposition to options A and B.

While acknowledging the necessity of upgrading the city's power infrastructure, there are several significant concerns that demand attention:

1. **Health Concerns**: The potential health risks associated with prolonged exposure to unsafe levels of electromagnetic fields (EMFs) emitted by these high-power electric lines are paramount. Numerous studies have indicated a possible correlation between EMF exposure and various health issues, including heightened risks of certain cancers and neurological disorders, especially in children and the elderly. I have extensively researched this topic and found compelling evidence supporting these concerns. For instance, there is extensive research supporting that

magnetic fields generated by the proposed power lines far exceed safe levels for human exposure, posing significant risks to residents, particularly those living within close proximity to the installation site.

Residents living in close proximity to these high power lines are at greater risk. I have gone through several medical and scientific research papers published on this matter that support our concern on this matter.
Here are a few links for reference to some such research articles:

- https://www.ncbi.nlm.nih.gov/pmc/articles/PMC10590107/
- https://www.hydroone.com/poweroutagesandsafety_/corporatehealthandsafety_/EMFs/Transmission_Line_EMF_Fields.pdf
- https://www.emrss.com/blogs/emr-shielding-solutions-blogs/what-are-safe-levels-of-emf

As a quick overview from these please see below:

The magnetic field generated by the high power lines is way beyond safe levels for humans. Here is a break up:

Â· 115kV power transmission line has a Mean Magnetic Field (mG) of 6.5 at a distance of <50 feet.
Â· 230kV power transmission line has a Mean Magnetic Field (mG) of 19.5 at a distance of <50 feet. (ref. Link2)

As the project stands today, the first row of houses in Mission Gardens on Lafayette Street will be less than 50 feet from the proposed installation point per Route A of these poles.The safe value of magnetic field around humans is 0.7mg (ref. Link3) per numbers listed above, it's evident that residents in close proximity will be exposed to very high unsafe levels of EMF. This will have a significant

impact to all the residents within 50-75 feet. As mentioned ,more reference to various NIH research articles on Pubmed can also be provided if needed to reinforce the concerns.

While I am speaking up as a resident of Mission Gardens, there are many other houses and apartment complexes along and near Lafayette St. whose residents will also be impacted by the unsafe levels of EMF.
Even a small risk is substantial for public health safety and can and should not be ignored by authorities; we need to err on the side of caution.

2. **Increased Risk for Catastrophic Accidents and Fire Hazards**: The proposed route intersects with an already congested utility zone along Lafayette Street, heightening the risk of accidents and fire hazards, especially given the proximity to existing railway lines, residential buildings, and heavy vehicular traffic.
3. **Impact on Home Insurance Costs**: The addition of high-power transmission lines in front of residences introduces additional risk factors that could prompt insurance companies to raise premiums further, exacerbating the already soaring home insurance costs in the Bay Area.
4. **Property Value Concerns**: The aesthetic and health-related concerns associated with the proposed power lines could adversely affect property values in our community, posing a significant concern for homeowners who have invested substantially in their properties.
5. **Aesthetic Impact**: The installation of large electric poles and wires would detract from the visual appeal of our neighborhood, undermining the pride we take in our well-maintained homes and attractive streetscapes.
6. **Complexity and Inconvenience**: The construction and maintenance of these power lines could disrupt our daily lives, leading to noise pollution, road closures, and

restricted access to homes. Moreover, frequent power outages and service interruptions may result from ongoing maintenance activities.

7. **Exploring Alternatives**: We urge the city to explore alternative solutions such as upgrading existing lines or implementing underground power lines, despite potentially higher upfront costs. These alternatives offer long-term benefits in terms of safety, reliability, and minimal aesthetic impact. Additionally, investigating advanced technologies and alternative routing options could help mitigate the adverse effects on our community.

I respectfully request a meeting with relevant city officials and representatives from the utility company to discuss these concerns in detail and explore viable solutions. Finding a balance between necessary infrastructure upgrades and safeguarding the health, safety, and aesthetic integrity of our community is imperative.

As a concerned resident of Santa Clara, and a member of a community directly affected by this proposal, I strongly oppose the installation of power lines in options A and B. I implore Silicon Valley Power to consider alternative options that prioritize public health and safety and minimize adverse impacts on Santa Clara residents.

Thank you for your attention to this pressing matter. I eagerly await your response and the opportunity to collaborate on finding a satisfactory resolution.

Sushil Gote
4506 St Palais Place
Santa Clara
CA
4084318629

--
Sushil &Chetna Gote
San Jose, CA

Re: Concerns Regarding Upcoming High Power Electric Wire Poles in Our Community(Mission Gardens) for the upcoming SVP project connecting the Northern Receiving Station NRS to Kifer receiving station (KRS).

Ashwini <ashwini208@yahoo.com>

Wed 5/29/2024 4:55 PM

To:Gane Sugali <ganenaik@yahoo.com>;NRS-KRS Project <NRS-KRS@aspeneg.com>;mayorandcouncil@santaclaraca.gov <mayorandcouncil@santaclaraca.gov>;info@siliconvalleypower.com <info@siliconvalleypower.com>; planningcommission@santaclaraca.gov <planningcommission@santaclaraca.gov>
Cc:Gane Sugali <ganenaik@yahoo.com>

Yahoo Mail: Search, Organize, Conquer

On Mon, May 27, 2024 at 2:55 PM, Gane Sugali <ganenaik@yahoo.com> wrote:

To Whomsoever it may concern,
As a concerned resident of Santa Clara, I am writing to express our apprehensions regarding the proposed installation route for high-power electric transmission lines and poles by Silicon Valley Power (SVP). This initiative is part of the project aimed at connecting the Northern Receiving Station (NRS) and Kifer Receiving Station (KRS).
Having reviewed the materials provided by your office and attended the recent public scoping meeting on May 23, 2024, I have delved into the details of the project. After careful consideration, I must voice my complete opposition to options A and B.
While acknowledging the necessity of upgrading the city's power infrastructure, there are several significant concerns that demand attention:
Health Concerns: The potential health risks associated with prolonged exposure to unsafe levels of electromagnetic fields (EMFs) emitted by these high-power electric lines are paramount. Numerous studies have indicated a possible correlation between EMF exposure and various health issues, including heightened risks of certain cancers and neurological disorders, especially in children and the elderly. I have extensively researched this topic and found compelling evidence supporting these concerns. For instance, there is extensive research supporting that magnetic fields generated by the proposed power lines far exceed safe levels for human exposure, posing significant risks to residents, particularly those living within close proximity to the installation site.
Residents living in close proximity to these high power lines are at greater risk. I have gone through several medical and scientific research papers published on this matter that support our concern on this matter.
Here are a few links for reference to some such research articles:

https://www.ncbi.nlm.nih.gov/pmc/articles/PMC10590107/
https://www.hydroone.com/poweroutagesandsafety_/corporatehealthandsafety_/EMFs/Transmission_Line_EMF_Fields.pdf
https://www.emrss.com/blogs/emr-shielding-solutions-blogs/what-are-safe-levels-of-emf

As a quick overview from these please see below:

The magnetic field generated by the high power lines is way beyond safe levels for humans. Here is a break up:
· 115kV power transmission line has a Mean Magnetic Field (mG) of 6.5 at a distance of <50 feet.
· 230kV power transmission line has a Mean Magnetic Field (mG) of 19.5 at a distance of <50 feet. (ref. Link2)

As the project stands today, the first row of houses in Mission Gardens on Lafayette Street will be less than 50 feet from the proposed installation point per Route A of these poles.The safe value of magnetic field around humans is 0.7mg (ref. Link3) per numbers listed above, it's evident that residents in close proximity will be exposed to very high unsafe levels of EMF. This will have a significant impact to all the residents within 50-75 feet. As mentioned ,more reference to various NIH research articles on Pubmed can also be provided if needed to reinforce the concerns.

While I am speaking up as a resident of Mission Gardens, there are many other houses and apartment complexes along and near Lafayette St. whose residents will also be impacted by the unsafe levels of EMF.
Even a small risk is substantial for public health safety and can and should not be ignored by authorities; we need to err on the side of caution.
Increased Risk for Catastrophic Accidents and Fire Hazards: The proposed route intersects with an already congested utility zone along Lafayette Street, heightening the risk of accidents and fire hazards, especially given the proximity to existing railway lines, residential buildings, and heavy vehicular traffic.

Impact on Home Insurance Costs: The addition of high-power transmission lines in front of residences introduces additional risk factors that could prompt insurance companies to raise premiums further, exacerbating the already soaring home insurance costs in the Bay Area.

Property Value Concerns: The aesthetic and health-related concerns associated with the proposed power lines could adversely affect property values in our community, posing a significant concern for homeowners who have invested substantially in their properties.

Aesthetic Impact: The installation of large electric poles and wires would detract from the visual appeal of our neighborhood, undermining the pride we take in our well-maintained homes and attractive streetscapes.

Complexity and Inconvenience: The construction and maintenance of these power lines could disrupt our daily lives, leading to noise pollution, road closures, and restricted access to homes. Moreover, frequent power outages and service interruptions may result from ongoing maintenance activities.

Exploring Alternatives: We urge the city to explore alternative solutions such as upgrading existing lines or implementing underground power lines, despite potentially higher upfront costs. These alternatives offer long-term benefits in terms of safety, reliability, and minimal aesthetic impact. Additionally, investigating advanced technologies and alternative routing options could help mitigate the adverse effects on our community.

I respectfully request a meeting with relevant city officials and representatives from the utility company to discuss these concerns in detail and explore viable solutions. Finding a balance between necessary infrastructure upgrades and safeguarding the health, safety, and aesthetic integrity of our community is imperative.

As a concerned resident of Santa Clara, and a member of a community directly affected by this proposal, I strongly oppose the installation of power lines in options A and B. I implore Silicon Valley Power to consider alternative options that prioritize public health and safety and minimize adverse impacts on Santa Clara residents.

Thank you for your attention to this pressing matter. I eagerly await your response and the opportunity to collaborate on finding a satisfactory resolution.

Aswini Kumbavath
1921 Silva place Santa Clara 95054
4087189040
Mission Garden community

Concerns Regarding Upcoming High Power Electric Wire Poles in Our Community(Mission Gardens) for the upcoming SVP project connecting the Northern Receiving Station NRS to Kifer receiving station (KRS).

kanupriya kabra <kanu449@gmail.com>

Wed 5/29/2024 4:55 PM

To:AJackman@santaclaraca.gov <AJackman@santaclaraca.gov>;NRS-KRS Project <NRS-KRS@aspeneg.com>; info@siliconvalleypower.com <info@siliconvalleypower.com>;manager@santaclaraca.gov <manager@santaclaraca.gov>; mayorandcouncil@santaclaraca.gov <mayorandcouncil@santaclaraca.gov>;planningcommission@santaclaraca.gov <planningcommission@santaclaraca.gov>

To Whomsoever it may concern,

As a concerned resident of Santa Clara, I am writing to express our apprehensions regarding the proposed installation route for high-power electric transmission lines and poles by Silicon Valley Power (SVP). This initiative is part of the project aimed at connecting the Northern Receiving Station (NRS) and Kifer Receiving Station (KRS).

Having reviewed the materials provided by your office and attended the recent public scoping meeting on May 23, 2024, I have delved into the details of the project. After careful consideration, I must voice my complete opposition to options A and B.

While acknowledging the necessity of upgrading the city's power infrastructure, there are several significant concerns that demand attention:

1. **Health Concerns**: The potential health risks associated with prolonged exposure to unsafe levels of electromagnetic fields (EMFs) emitted by these high-power electric lines are paramount. Numerous studies have indicated a possible correlation between EMF exposure and various health issues, including heightened risks of certain cancers and neurological disorders, especially in children and the elderly. I have extensively researched this topic and found compelling evidence supporting these concerns. For instance, there is extensive research supporting that magnetic fields generated by the proposed power lines far exceed safe levels for human exposure, posing significant risks to residents, particularly those living within close proximity to the installation site.

   Residents living in close proximity to these high power lines are at greater risk. I have gone through several medical and scientific research papers published on this matter that support our concern on this matter.
   Here are a few links for reference to some such research articles:

- https://www.ncbi.nlm.nih.gov/pmc/articles/PMC10590107/
- https://www.hydroone.com/poweroutagesandsafety_/corporatehealthandsafety_/EMFs/Transmission_Line_EMF_Fields.pdf
- https://www.emrss.com/blogs/emr-shielding-solutions-blogs/what-are-safe-levels-of-emf

   As a quick overview from these please see below:

   The magnetic field generated by the high power lines is way beyond safe levels for humans. Here is a break up:

   - 115kV power transmission line has a Mean Magnetic Field (mG) of 6.5 at a distance of <50 feet.

- 230kV power transmission line has a Mean Magnetic Field (mG) of 19.5 at a distance of <50 feet. (ref. Link2)

As the project stands today, the first row of houses in Mission Gardens on Lafayette Street will be less than 50 feet from the proposed installation point per Route A of these poles.The safe value of magnetic field around humans is 0.7mg (ref. Link3) per numbers listed above, it's evident that residents in close proximity will be exposed to very high unsafe levels of EMF. This will have a significant impact to all the residents within 50-75 feet. As mentioned ,more reference to various NIH research articles on Pubmed can also be provided if needed to reinforce the concerns.

While I am speaking up as a resident of Mission Gardens, there are many other houses and apartment complexes along and near Lafayette St. whose residents will also be impacted by the unsafe levels of EMF.
Even a small risk is substantial for public health safety and can and should not be ignored by authorities; we need to err on the side of caution.

2. **Increased Risk for Catastrophic Accidents and Fire Hazards**: The proposed route intersects with an already congested utility zone along Lafayette Street, heightening the risk of accidents and fire hazards, especially given the proximity to existing railway lines, residential buildings, and heavy vehicular traffic.
3. **Impact on Home Insurance Costs**: The addition of high-power transmission lines in front of residences introduces additional risk factors that could prompt insurance companies to raise premiums further, exacerbating the already soaring home insurance costs in the Bay Area.
4. **Property Value Concerns**: The aesthetic and health-related concerns associated with the proposed power lines could adversely affect property values in our community, posing a significant concern for homeowners who have invested substantially in their properties.
5. **Aesthetic Impact**: The installation of large electric poles and wires would detract from the visual appeal of our neighborhood, undermining the pride we take in our well-maintained homes and attractive streetscapes.
6. **Complexity and Inconvenience**: The construction and maintenance of these power lines could disrupt our daily lives, leading to noise pollution, road closures, and restricted access to homes. Moreover, frequent power outages and service interruptions may result from ongoing maintenance activities.
7. **Exploring Alternatives**: We urge the city to explore alternative solutions such as upgrading existing lines or implementing underground power lines, despite potentially higher upfront costs. These alternatives offer long-term benefits in terms of safety, reliability, and minimal aesthetic impact. Additionally, investigating advanced technologies and alternative routing options could help mitigate the adverse effects on our community.

I respectfully request a meeting with relevant city officials and representatives from the utility company to discuss these concerns in detail and explore viable solutions. Finding a balance between necessary infrastructure upgrades and safeguarding the health, safety, and aesthetic integrity of our community is imperative.

As a concerned resident of Santa Clara, and a member of a community directly affected by this proposal, I strongly oppose the installation of power lines in options A and B. I implore Silicon Valley Power to consider alternative options that prioritize public health and safety and minimize adverse impacts on Santa Clara residents.

Thank you for your attention to this pressing matter. I eagerly await your response and the opportunity to collaborate on finding a satisfactory resolution.

Kanupriya Kabra
2029 Garzoni Pl, Santa Clara, CA 95054
Phone: 408-431-3012
Mission Gardens

Concerns Regarding new 115 kV power lines.

Gmail-CL <jay.ily2004@gmail.com>

Thu 5/30/2024 8:20 AM

To:NRS-KRS Project <NRS-KRS@aspeneg.com>;mayorandcouncil@santaclaraca.gov <mayorandcouncil@santaclaraca.gov>; info@siliconvalleypower.com <info@siliconvalleypower.com>;planningcommission@santaclaraca.gov <planningcommission@santaclaraca.gov>;manager@santaclaraca.gov <manager@santaclaraca.gov>
Cc:Gmail-CL <jay.ily2004@gmail.com>

To Whomsoever it may concern,

As a concerned resident of Santa Clara, I am writing to express our apprehensions regarding the proposed installation route for high-power electric transmission lines and poles by Silicon Valley Power (SVP). This initiative is part of the project aimed at connecting the Northern Receiving Station (NRS) and Kifer Receiving Station (KRS).

Having reviewed the materials provided by your office and attended the recent public scoping meeting on May 23, 2024, I have delved into the details of the project. After careful consideration, I must voice my complete opposition to options A and B.

While acknowledging the necessity of upgrading the city's power infrastructure, there are several significant concerns that demand attention:

1. **Health Concerns**: The potential health risks associated with prolonged exposure to unsafe levels of electromagnetic fields (EMFs) emitted by these high-power electric lines are paramount. Numerous studies have indicated a possible correlation between EMF exposure and various health issues, including heightened risks of certain cancers and neurological disorders, especially in children and the elderly. I have extensively researched this topic and found compelling evidence supporting these concerns. For instance, there is extensive research supporting that

magnetic fields generated by the proposed power lines far exceed safe levels for human exposure, posing significant risks to residents, particularly those living within close proximity to the installation site.

2. **Increased Risk for Catastrophic Accidents and Fire Hazards**: The proposed route intersects with an already congested utility zone along Lafayette Street, heightening the risk of accidents and fire hazards, especially given the proximity to existing railway lines, residential buildings, and heavy vehicular traffic.
3. **Impact on Home Insurance Costs**: The addition of high-power transmission lines in front of residences introduces additional risk factors that could prompt insurance companies to raise premiums further, exacerbating the already soaring home insurance costs in the Bay Area.
4. **Property Value Concerns**: The aesthetic and health-related concerns associated with the proposed power lines could adversely affect property values in our community, posing a significant concern for homeowners who have invested substantially in their properties.
5. **Aesthetic Impact**: The installation of large electric poles and wires would detract from the visual appeal of our neighborhood, undermining the pride we take in our well-maintained homes and attractive streetscapes.
6. **Complexity and Inconvenience**: The construction and maintenance of these power lines could disrupt our daily lives, leading to noise pollution, road closures, and restricted access to homes. Moreover, frequent power outages and service interruptions may result from ongoing maintenance activities.
7. **Exploring Alternatives**: We urge the city to explore alternative solutions such as upgrading existing lines or implementing underground power lines, despite potentially higher upfront costs. These alternatives offer long-term benefits in terms of safety, reliability, and minimal aesthetic

impact. Additionally, investigating advanced technologies and alternative routing options could help mitigate the adverse effects on our community.

As a concerned resident of Santa Clara, and a member of a community directly affected by this proposal,

I strongly oppose the installation of power lines in route A and B. I implore Silicon Valley Power to consider alternative options(route C) that prioritize public health and safety and minimize adverse impacts on Santa Clara residents.

We strongly recommend utilizing the existing underground channel near Payne Place if Route A or B is chosen. For your reference, the Payne Place community already benefits from underground electric lines, eliminating the need for overhead lines in that area.

Thank you for your attention to this pressing matter, and eagerly await your response.

Sincerely

Emily Le
2146 Payne Pl, Santa Clara
jay.ily2004@gmail.com
Payne Place Community

Concerns Regarding Upcoming High Power Electric Wire Poles in Our Community(Mission Gardens) for the upcoming SVP project connecting the Northern Receiving Station NRS to Kifer receiving station (KRS).

Unnikrishnan Udinoor <unnikrishnan.udinoor@gmail.com>

Wed 5/29/2024 4:57 PM

To:ajackman@santaclaraca.gov <ajackman@santaclaraca.gov>;NRS-KRS Project <NRS-KRS@aspeneg.com>; mayorandcouncil@santaclaraca.gov <mayorandcouncil@santaclaraca.gov>;info@siliconvalleypower.com <info@siliconvalleypower.com>;planningcommission@santaclaraca.gov <planningcommission@santaclaraca.gov>; manager@santaclaraca.gov <manager@santaclaraca.gov>

To Whomsoever it may concern,

As a concerned resident of Santa Clara, I am writing to express our apprehensions regarding the proposed installation route for high-power electric transmission lines and poles by Silicon Valley Power (SVP). This initiative is part of the project aimed at connecting the Northern Receiving Station (NRS) and Kifer Receiving Station (KRS).

Having reviewed the materials provided by your office and attended the recent public scoping meeting on May 23, 2024, I have delved into the details of the project. After careful consideration, I must voice my complete opposition to options A and B.

While acknowledging the necessity of upgrading the city's power infrastructure, there are several significant concerns that demand attention:

1. **Health Concerns**: The potential health risks associated with prolonged exposure to unsafe levels of electromagnetic fields (EMFs) emitted by these high-power electric lines are paramount. Numerous studies have indicated a possible correlation between EMF exposure and various health issues, including heightened risks of certain cancers and neurological disorders, especially in children and the elderly. I have extensively researched this topic and found compelling evidence supporting these concerns. For instance, there is extensive research supporting that magnetic fields generated by the proposed power lines far exceed safe levels for human exposure, posing significant risks to residents, particularly those living within close proximity to the installation site.

   Residents living in close proximity to these high power lines are at greater risk. I have gone through several medical and scientific research papers published on this matter that support our concern on this matter.
   Here are a few links for reference to some such research articles:

- https://www.ncbi.nlm.nih.gov/pmc/articles/PMC10590107/
- https://www.hydroone.com/poweroutagesandsafety_/corporatehealthandsafety_/EMFs/Transmission_Line_EMF_Fields.pdf
- https://www.emrss.com/blogs/emr-shielding-solutions-blogs/what-are-safe-levels-of-emf

   As a quick overview from these please see below:

   The magnetic field generated by the high power lines is way beyond safe levels for humans. Here is a break up:

   - 115kV power transmission line has a Mean Magnetic Field (mG) of 6.5 at a distance of <50 feet.

- 230kV power transmission line has a Mean Magnetic Field (mG) of 19.5 at a distance of <50 feet. (ref. Link2)

As the project stands today, the first row of houses in Mission Gardens on Lafayette Street will be less than 50 feet from the proposed installation point per Route A of these poles.The safe value of magnetic field around humans is 0.7mg (ref. Link3) per numbers listed above, it's evident that residents in close proximity will be exposed to very high unsafe levels of EMF. This will have a significant impact to all the residents within 50-75 feet. As mentioned ,more reference to various NIH research articles on Pubmed can also be provided if needed to reinforce the concerns.

While I am speaking up as a resident of Mission Gardens, there are many other houses and apartment complexes along and near Lafayette St. whose residents will also be impacted by the unsafe levels of EMF.
Even a small risk is substantial for public health safety and can and should not be ignored by authorities; we need to err on the side of caution.

2. **Increased Risk for Catastrophic Accidents and Fire Hazards**: The proposed route intersects with an already congested utility zone along Lafayette Street, heightening the risk of accidents and fire hazards, especially given the proximity to existing railway lines, residential buildings, and heavy vehicular traffic.
3. **Impact on Home Insurance Costs**: The addition of high-power transmission lines in front of residences introduces additional risk factors that could prompt insurance companies to raise premiums further, exacerbating the already soaring home insurance costs in the Bay Area.
4. **Property Value Concerns**: The aesthetic and health-related concerns associated with the proposed power lines could adversely affect property values in our community, posing a significant concern for homeowners who have invested substantially in their properties.
5. **Aesthetic Impact**: The installation of large electric poles and wires would detract from the visual appeal of our neighborhood, undermining the pride we take in our well-maintained homes and attractive streetscapes.
6. **Complexity and Inconvenience**: The construction and maintenance of these power lines could disrupt our daily lives, leading to noise pollution, road closures, and restricted access to homes. Moreover, frequent power outages and service interruptions may result from ongoing maintenance activities.
7. **Exploring Alternatives**: We urge the city to explore alternative solutions such as upgrading existing lines or implementing underground power lines, despite potentially higher upfront costs. These alternatives offer long-term benefits in terms of safety, reliability, and minimal aesthetic impact. Additionally, investigating advanced technologies and alternative routing options could help mitigate the adverse effects on our community.

I respectfully request a meeting with relevant city officials and representatives from the utility company to discuss these concerns in detail and explore viable solutions. Finding a balance between necessary infrastructure upgrades and safeguarding the health, safety, and aesthetic integrity of our community is imperative.

As a concerned resident of Santa Clara, and a member of a community directly affected by this proposal, I strongly oppose the installation of power lines in options A and B. I implore Silicon Valley Power to consider alternative options that prioritize public health and safety and minimize adverse impacts on Santa Clara residents.

Thank you for your attention to this pressing matter. I eagerly await your response and the opportunity to collaborate on finding a satisfactory resolution.

Unnikrishnan Udinoor
4479 Moulin Pl, Santa Clara - 95054
408 368 2674
Mission Gardens

Concerns Regarding Upcoming High Power Electric Wire Poles in Our Community(Mission Gardens) for the upcoming SVP project connecting the Northern Receiving Station NRS to Kifer receiving station (KRS)

Simple Yadav <simpleyadav123@gmail.com>

Thu 5/30/2024 8:20 AM

To:NRS-KRS Project <NRS-KRS@aspeneg.com>;mayorandcouncil@santaclaraca.gov <mayorandcouncil@santaclaraca.gov>; info@siliconvalleypower.com <info@siliconvalleypower.com>;planningcommission@santaclaraca.gov <planningcommission@santaclaraca.gov>;manager@santaclaraca.gov <manager@santaclaraca.gov>; AJackman@santaclaraca.gov <AJackman@santaclaraca.gov>

To Whomsoever it may concern,

As a concerned resident of Santa Clara, I am writing to express our apprehensions regarding the proposed installation route for high-power electric transmission lines and poles by Silicon Valley Power (SVP). This initiative is part of the project aimed at connecting the Northern Receiving Station (NRS) and Kifer Receiving Station (KRS).

Having reviewed the materials provided by your office and attended the recent public scoping meeting on May 23, 2024, I have delved into the details of the project. After careful consideration, I must voice my complete opposition to options A and B.

While acknowledging the necessity of upgrading the city's power infrastructure, there are several significant concerns that demand attention:

Health Concerns: The potential health risks associated with prolonged exposure to unsafe levels of electromagnetic fields (EMFs) emitted by these high-power electric lines are paramount. Numerous studies have indicated a possible correlation between EMF exposure and various health issues, including heightened risks of certain cancers and neurological disorders, especially in children and the elderly. I have extensively researched this topic and found compelling evidence supporting these concerns. For instance, there is extensive research supporting that magnetic fields generated by the proposed power lines far exceed safe levels for human exposure, posing significant risks to residents, particularly those living within close proximity to the installation site.

Residents living in close proximity to these high power lines are at greater risk. I have gone through several medical and scientific research papers published on this matter that support our concern on this matter.

Here are a few links for reference to some such research articles:

https://nam02.safelinks.protection.outlook.com/?url=https%3A%2F%2Fwww.ncbi.nlm.nih.gov%2Fpmc%2Farticles%2FPMC10590107%2F&data=05%7C02%7Cnrs-krs%40aspeneg.com%7Cc13297b7d13b49b7aa7608dc803ad518%7Cf56a45392d8e4b0d8454a64203aa39d3%7C0%7C0%7C638526792159684221%7CUnknown%7CTWFpbGZsb3d8eyJWIjoiMC4wLjAwMDAiLCJQIjoiV2luMzIiLCJBTiI6Ik1haWwiLCJXVCI6Mn0%3D%7C60000%7C%7C%7C&sdata=r1uVe7ZGMfL0cIaPTQgWpu6kaNHzQ1MysJuGjcqSVJU%3D&reserved=0

https://nam02.safelinks.protection.outlook.com/?url=https%3A%2F%2Fwww.hydroone.com%2Fpoweroutagesandsafety_%2Fcorporatehealthandsafety_%2FEMFs%2FTransmission_Line_EMF_Fields.pdf&data=05%7C02%7Cnrs-krs%40aspeneg.com%7Cc13297b7d13b49b7aa7608dc803ad518%7Cf56a45392d8e4b0d8454a64203aa39d3%7C0%7C0%7C638526792159692904%7CUnknown%7CTWFpbGZsb3d8eyJWIjoiMC4wLjAwMDAiLCJQIjoiV2luMzIiLCJBTiI6Ik1haWwiLCJXVCI6Mn0%3D%7C60000%7C%7C%7C&sdata=CrKAttKIf0GaaHQ4AuQpaaTx1b2yJ2bIbDMOrDAaFQw%3D&reserved=0

https://nam02.safelinks.protection.outlook.com/?url=https%3A%2F%2Fwww.emrss.com%2Fblogs%2Femr-shielding-solutions-blogs%2Fwhat-are-safe-levels-of-emf&data=05%7C02%7Cnrs-krs%40aspeneg.com%7Cc13297b7d13b49b7aa7608dc803ad518%7Cf56a45392d8e4b0d8454a64203aa39d3%7C0%7C0%7C638526792159696016%7CUnknown%7CTWFpbGZsb3d8eyJWIjoiMC4wLjAwMDAiLCJQIjoiV2luMzIiLCJBTiI6Ik1haWwiLCJXVCI6Mn0%3D%7C60000%7C%7C%7C&sdata=WktXcwAAfxCxxvi7UlHPyYcpvCr%2Bphr%2F4K0cPM02n9Y%3D&reserved=0

As a quick overview from these please see below:

The magnetic field generated by the high power lines is way beyond safe levels for humans. Here is a break up:

· 115kV power transmission line has a Mean Magnetic Field (mG) of 6.5 at a distance of <50 feet.

· 230kV power transmission line has a Mean Magnetic Field (mG) of 19.5 at a distance of <50 feet. (ref. Link2)

As the project stands today, the first row of houses in Mission Gardens on Lafayette Street will be less than 50 feet from the proposed installation point per Route A of these poles.The safe value of magnetic field around humans is 0.7mg (ref. Link3) per numbers listed above, it's evident that residents in close proximity will be exposed to very high unsafe levels of EMF. This will have a significant impact to all the residents within 50-75 feet. As mentioned ,more reference to various NIH research articles on Pubmed can also be provided if needed to reinforce the concerns.

While I am speaking up as a resident of Mission Gardens, there are many other houses and apartment complexes along and near Lafayette St. whose residents will also be impacted by the unsafe levels of EMF.

Even a small risk is substantial for public health safety and can and should not be ignored by authorities; we need to err on the side of caution.

Increased Risk for Catastrophic Accidents and Fire Hazards: The proposed route intersects with an already congested utility zone along Lafayette Street, heightening the risk of accidents and fire hazards, especially given the proximity to existing railway lines, residential buildings, and heavy vehicular traffic.

Impact on Home Insurance Costs: The addition of high-power transmission lines in front of residences introduces additional risk factors that could prompt insurance companies to raise premiums further, exacerbating the already soaring home insurance costs in the Bay Area.

Property Value Concerns: The aesthetic and health-related concerns associated with the proposed power lines could adversely affect property values in our community, posing a significant concern for homeowners who have invested substantially in their properties.

Aesthetic Impact: The installation of large electric poles and wires would detract from the visual appeal of our neighborhood, undermining the pride we take in our well-maintained homes and attractive streetscapes.

Complexity and Inconvenience: The construction and maintenance of these power lines could disrupt our daily lives, leading to noise pollution, road closures, and restricted access to homes. Moreover, frequent power outages and service interruptions may result from ongoing maintenance activities.

Exploring Alternatives: We urge the city to explore alternative solutions such as upgrading existing lines or implementing underground power lines, despite potentially higher upfront costs. These alternatives offer long-term benefits in terms of safety, reliability, and minimal aesthetic impact. Additionally, investigating advanced technologies and alternative routing options could help mitigate the adverse effects on our community.

I respectfully request a meeting with relevant city officials and representatives from the utility company to discuss these concerns in detail and explore viable solutions. Finding a balance between necessary infrastructure upgrades and safeguarding the health, safety,

and aesthetic integrity of our community is imperative.

As a concerned resident of Santa Clara, and a member of a community directly affected by this proposal, I strongly oppose the installation of power lines in options A and B. I implore Silicon Valley Power to consider alternative options that prioritize public health and safety and minimize adverse impacts on Santa Clara residents.

Thank you for your attention to this pressing matter. I eagerly await your response and the opportunity to collaborate on finding a satisfactory resolution.

Simple Yadav
1861 Garzoni Pl,
Santa clara
408-507-6352

Concerns Regarding Upcoming High Power Electric Wire Poles in Our Community(Mission Gardens) for the upcoming SVP project connecting the Northern Receiving Station NRS to Kifer receiving station (KRS).

Hima <himа@kalapatapu.com>

Wed 5/29/2024 5:12 PM

To:NRS-KRS Project <NRS-KRS@aspeneg.com>;mayorandcouncil@santaclaraca.gov <mayorandcouncil@santaclaraca.gov>; info@siliconvalleypower.com <info@siliconvalleypower.com>;planningcommission@santaclaraca.gov <planningcommission@santaclaraca.gov>;manager@santaclaraca.gov <manager@santaclaraca.gov>; AJackman@santaclaraca.gov <AJackman@santaclaraca.gov>

Subject: Concerns Regarding Upcoming High Power Electric Wire Poles in Our Community(Mission Gardens) for the upcoming SVP project connecting the Northern Receiving Station NRS to Kifer receiving station (KRS).

To Whomsoever it may concern,

As a concerned resident of Santa Clara, I am writing to express our apprehensions regarding the proposed installation route for high-power electric transmission lines and poles by Silicon Valley Power (SVP). This initiative is part of the project aimed at connecting the Northern Receiving Station (NRS) and Kifer Receiving Station (KRS).

Having reviewed the materials provided by your office and attended the recent public scoping meeting on May 23, 2024, I have delved into the details of the project. After careful consideration, I must voice my complete opposition to options A and B.

While acknowledging the necessity of upgrading the city's power infrastructure, there are several significant concerns that demand attention:

1. **Health Concerns**: The potential health risks associated with prolonged exposure to unsafe levels of electromagnetic fields (EMFs) emitted by these high-power electric lines are paramount. Numerous studies have indicated a possible correlation between EMF exposure and various health issues, including heightened risks of certain cancers and neurological disorders, especially in children and the elderly. I have extensively researched this topic and found compelling evidence supporting these concerns. For instance, there is extensive research supporting that magnetic fields generated by the proposed power lines far exceed safe levels for human exposure, posing significant risks to residents, particularly those living within close proximity to the installation site.

   Residents living in close proximity to these high power lines are at greater risk. I have gone through several medical and scientific research papers published on this matter that support our concern on this matter.
   Here are a few links for reference to some such research articles:

- https://www.ncbi.nlm.nih.gov/pmc/articles/PMC10590107/
- https://www.hydroone.com/poweroutagesandsafety_/corporatehealthandsafety_/EMFs/Transmission_Line_EMF_Fields.pdf
- https://www.emrss.com/blogs/emr-shielding-solutions-blogs/what-are-safe-levels-of-emf

As a quick overview from these please see below:

The magnetic field generated by the high power lines is way beyond safe levels for humans. Here is a break up:

- 115kV power transmission line has a Mean Magnetic Field (mG) of 6.5 at a distance of <50 feet.
- 230kV power transmission line has a Mean Magnetic Field (mG) of 19.5 at a distance of <50 feet. (ref. Link2)

As the project stands today, the first row of houses in Mission Gardens on Lafayette Street will be less than 50 feet from the proposed installation point per Route A of these poles.The safe value of magnetic field around humans is 0.7mg (ref. Link3) per numbers listed above, it's evident that residents in close proximity will be exposed to very high unsafe levels of EMF. This will have a significant impact to all the residents within 50-75 feet. As mentioned ,more reference to various NIH research articles on Pubmed can also be provided if needed to reinforce the concerns.

While I am speaking up as a resident of Mission Gardens, there are many other houses and apartment complexes along and near Lafayette St. whose residents will also be impacted by the unsafe levels of EMF.
Even a small risk is substantial for public health safety and can and should not be ignored by authorities; we need to err on the side of caution.

2. **Increased Risk for Catastrophic Accidents and Fire Hazards**: The proposed route intersects with an already congested utility zone along Lafayette Street, heightening the risk of accidents and fire hazards, especially given the proximity to existing railway lines, residential buildings, and heavy vehicular traffic.
3. **Impact on Home Insurance Costs**: The addition of high-power transmission lines in front of residences introduces additional risk factors that could prompt insurance companies to raise premiums further, exacerbating the already soaring home insurance costs in the Bay Area.
4. **Property Value Concerns**: The aesthetic and health-related concerns associated with the proposed power lines could adversely affect property values in our community, posing a significant concern for homeowners who have invested substantially in their properties.
5. **Aesthetic Impact**: The installation of large electric poles and wires would detract from the visual appeal of our neighborhood, undermining the pride we take in our well-maintained homes and attractive streetscapes.
6. **Complexity and Inconvenience**: The construction and maintenance of these power lines could disrupt our daily lives, leading to noise pollution, road closures, and restricted access to homes. Moreover, frequent power outages and service interruptions may result from ongoing maintenance activities.
7. **Exploring Alternatives**: We urge the city to explore alternative solutions such as upgrading existing lines or implementing underground power lines, despite potentially higher upfront costs. These alternatives offer long-term benefits in terms of safety, reliability, and minimal aesthetic impact. Additionally, investigating advanced technologies and alternative routing options could help mitigate the adverse effects on our community.

I respectfully request a meeting with relevant city officials and representatives from the utility company to discuss these concerns in detail and explore viable solutions. Finding a balance between necessary

infrastructure upgrades and safeguarding the health, safety, and aesthetic integrity of our community is imperative.

As a concerned resident of Santa Clara, and a member of a community directly affected by this proposal, I strongly oppose the installation of power lines in options A and B. I implore Silicon Valley Power to consider alternative options that prioritize public health and safety and minimize adverse impacts on Santa Clara residents.

Thank you for your attention to this pressing matter. I eagerly await your response and the opportunity to collaborate on finding a satisfactory resolution.

Hima Kalapatapu
4502 St Palais Pl
Santa Clara

Feedback regarding 115KV TRANSMISSION LINE

Sandeep Jain <sandeep@leelalabs.com>

Wed 5/29/2024 5:16 PM

To:NRS-KRS Project <NRS-KRS@aspeneg.com>

Hello Ms. Jackman,

I am a resident living adjacent to Lafayette street and even though I appreciate the efforts SVP is taking to help the power situation in Santa Clara I am strongly against the "overground" plan for Route A.

Specifically, that plan is going to create a massive problem for the residents living near lafayette who already have to contend with the following problems:

1. road noise
2. train noise
3. overhead aeroplanes

Having the overground nine electric poles is going to spoil the aesthetic beauty of a residential area while also having health hazards.

If Route A must be chosen, why not do the "underground" option which will work for everyone.

Thank you,

Sandeep Jain
408.966.4763

Concerns Regarding Upcoming High Power Electric Wire Poles in Our Community(Mission Gardens) for the upcoming SVP project connecting the Northern Receiving Station NRS to Kifer receiving station (KRS).

Paddy Subbian <psubbian@gmail.com>

Wed 5/29/2024 6:04 PM

To:AJackman@santaclaraca.gov <AJackman@santaclaraca.gov>;NRS-KRS Project <NRS-KRS@aspeneg.com>; info@siliconvalleypower.com <info@siliconvalleypower.com>;manager@santaclaraca.gov <manager@santaclaraca.gov>; mayorandcouncil@santaclaraca.gov <mayorandcouncil@santaclaraca.gov>;planningcommission@santaclaraca.gov <planningcommission@santaclaraca.gov>

Hello Santa Clara City Leaders,

As a concerned resident of Santa Clara, I am writing to express our apprehensions regarding the proposed installation route for high-power electric transmission lines and poles by Silicon Valley Power (SVP). This initiative is part of the project aimed at connecting the Northern Receiving Station (NRS) and Kifer Receiving Station (KRS).

Having reviewed the materials provided by your office and attended the recent public scoping meeting on May 23, 2024, I have delved into the details of the project. After careful consideration, I must voice my complete opposition to options A and B.

While acknowledging the necessity of upgrading the city's power infrastructure, there are several significant concerns that demand attention:

Health Concerns: The potential health risks associated with prolonged exposure to unsafe levels of electromagnetic fields (EMFs) emitted by these high-power electric lines are paramount. Numerous studies have indicated a possible correlation between EMF exposure and various health issues, including heightened risks of certain cancers and neurological disorders, especially in children and the elderly. I have extensively researched this topic and found compelling evidence supporting these concerns. For instance, there is extensive research supporting that magnetic fields generated by the proposed power lines far exceed safe levels for human exposure, posing significant risks to residents, particularly those living within close proximity to the installation site.

Residents living in close proximity to these high power lines are at greater risk. I have gone through several medical and scientific research papers published on this matter that support our concern on this matter.
Here are a few links for reference to some such research articles:

https://www.ncbi.nlm.nih.gov/pmc/articles/PMC10590107/
https://www.hydroone.com/poweroutagesandsafety_/corporatehealthandsafety_/EMFs/Transmission_Line_EMF_Fields.pdf
https://www.emrss.com/blogs/emr-shielding-solutions-blogs/what-are-safe-levels-of-emf

As a quick overview from these please see below:

The magnetic field generated by the high power lines is way beyond safe levels for humans. Here is a break up:

- 115kV power transmission line has a Mean Magnetic Field (mG) of 6.5 at a distance of <50 feet.
- 230kV power transmission line has a Mean Magnetic Field (mG) of 19.5 at a distance of <50 feet. (ref. Link2)

As the project stands today, the first row of houses in Mission Gardens on Lafayette Street will be less than 50 feet from the proposed installation point per Route A of these poles.The safe value of magnetic field around humans is 0.7mg (ref. Link3) per numbers listed above, it's evident that residents in close proximity will be exposed to very high unsafe levels of EMF. This will have a significant impact to all the residents within 50-75 feet. As mentioned ,more reference to various NIH research articles on Pubmed can also be provided if needed to reinforce the concerns.

While I am speaking up as a resident of Mission Gardens, there are many other houses and apartment complexes along and near Lafayette St. whose residents will also be impacted by the unsafe levels of EMF.
Even a small risk is substantial for public health safety and can and should not be ignored by authorities; we need to err on the side of caution.

Increased Risk for Catastrophic Accidents and Fire Hazards: The proposed route intersects with an already congested utility zone along Lafayette Street, heightening the risk of accidents and fire hazards, especially given the proximity to existing railway lines, residential buildings, and heavy vehicular traffic.

Impact on Home Insurance Costs: The addition of high-power transmission lines in front of residences introduces additional risk factors that could prompt insurance companies to raise premiums further, exacerbating the already soaring home insurance costs in the Bay Area.

Property Value Concerns: The aesthetic and health-related concerns associated with the proposed power lines could adversely affect property values in our community, posing a significant concern for homeowners who have invested substantially in their properties.

Aesthetic Impact: The installation of large electric poles and wires would detract from the visual appeal of our neighborhood, undermining the pride we take in our well-maintained homes and attractive streetscapes.

Complexity and Inconvenience: The construction and maintenance of these power lines could disrupt our daily lives, leading to noise pollution, road closures, and restricted access to homes. Moreover, frequent power outages and service interruptions may result from ongoing maintenance activities.

Exploring Alternatives: We urge the city to explore alternative solutions such as upgrading existing lines or implementing underground power lines, despite potentially higher upfront costs. These alternatives offer long-term benefits in terms of safety, reliability, and minimal aesthetic impact. Additionally, investigating advanced technologies and alternative routing options could help mitigate the adverse effects on our community.

I respectfully request a meeting with relevant city officials and representatives from the utility company to discuss these concerns in detail and explore viable solutions. Finding a balance between necessary infrastructure upgrades and safeguarding the health, safety, and aesthetic integrity of our community is imperative.

As a concerned resident of Santa Clara, and a member of a community directly affected by this proposal, I strongly oppose the installation of power lines in options A and B. I implore Silicon Valley Power to consider alternative options that prioritize public health and safety and minimize adverse impacts on Santa Clara residents.

Thank you for your attention to this pressing matter. I eagerly await your response and the opportunity to collaborate on finding a satisfactory resolution.

Paddy Subbian
1885 Silva Place, Santa Clara 95054
408 569 2933
Mission Gardens Community

RE: Concerns Regarding Upcoming High Power Electric Wire Poles in Our Community(Mission Gardens) for the upcoming SVP project connecting the Northern Receiving Station NRS to Kifer receiving station (KRS).

Allie Jackman <AJackman@SantaClaraCA.gov>

Thu 5/30/2024 4:13 PM

To:Aparna Raman <aparna.vijay@gmail.com>
Cc:NRS-KRS Project <NRS-KRS@aspeneg.com>

Dear Concerned Resident of Santa Clara,

Thank you for submitting a comment on Silicon Valley Power's Northern Receiving Station (NRS) to Kifer Receiving Station (KRS) 115 kV Transmission Line Project. Your comment has been recorded and will be addressed and responded to in detail within the upcoming CEQA document (IS/MND). As a reminder, once the CEQA document is published, there will be another opportunity for public comment. We have added your information to our notification list for this project.

We look forward to continuing to work with you on this important project.

Best regards,

ALLIE JACKMAN, P.E.
Principal Electric Utility Engineer
D: 408-615-6639
881 Martin Avenue, Santa Clara, CA 95050
www.siliconvalleypower.com

From: Aparna Raman <aparna.vijay@gmail.com>
Sent: Wednesday, May 29, 2024 6:56 PM
To: Manager <Manager@santaclaraca.gov>; Allie Jackman <AJackman@SantaClaraCA.gov>; Mayor and Council <MAYORANDCOUNCIL@SantaClaraCA.gov>; PlanningCommission <PLANNINGCOMMISSION@santaclaraca.gov>
Subject: Concerns Regarding Upcoming High Power Electric Wire Poles in Our Community(Mission Gardens) for the upcoming SVP project connecng the Northern R eceiving Staon NR S to Kifer receiving staon (KR S).

You don't often get email from aparna.vijay@gmail.com. Learn why this is important

Hello Sir/ Madam,

As a concerned resident of Santa Clara, I am writing to express our apprehensions regarding the proposed installation route for high-power electric transmission lines and poles by Silicon Valley Power (SVP). This initiative is part of the project aimed at connecting the Northern Receiving Station (NRS) and Kifer Receiving Station (KRS).

Having reviewed the materials provided by your office and attended the recent public scoping meeting on May 23, 2024, I have delved into the details of the project. After careful

consideration, I must voice my complete opposition to options A and B.

While acknowledging the necessity of upgrading the city's power infrastructure, there are several significant concerns that demand attention:

1. **Health Concerns**: The potential health risks associated with prolonged exposure to unsafe levels of electromagnetic fields (EMFs) emitted by these high-power electric lines are paramount. Numerous studies have indicated a possible correlation between EMF exposure and various health issues, including heightened risks of certain cancers and neurological disorders, especially in children and the elderly. I have extensively researched this topic and found compelling evidence supporting these concerns. For instance, there is extensive research supporting that magnetic fields generated by the proposed power lines far exceed safe levels for human exposure, posing significant risks to residents, particularly those living within close proximity to the installation site.

Residents living in close proximity to these high power lines are at greater risk. I have gone through several medical and scientific research papers published on this matter that support our concern on this matter.

Here are a few links for reference to some such research articles:

- https://www.ncbi.nlm.nih.gov/pmc/articles/PMC10590107/
- https://www.hydroone.com/poweroutagesandsafety_/corporatehealthandsafety_/EMFs/Transmission_Line_EMF_Fields.pdf
- https://www.emrss.com/blogs/emr-shielding-solutions-blogs/what-are-safe-levels-of-emf

As a quick overview from these please see below:

The magnetic field generated by the high power lines is way beyond safe levels for humans. Here is a break up:

- Â· 115kV power transmission line has a Mean Magnetic Field (mG) of 6.5 at a distance of <50 feet.
- Â· 230kV power transmission line has a Mean Magnetic Field (mG) of 19.5 at a distance of <50 feet. (ref. Link2)

As the project stands today, the first row of houses in Mission Gardens on Lafayette Street will be less than 50 feet from the proposed installation point per Route A of these poles.The safe value of magnetic field around humans is 0.7mg (ref. Link3) per numbers listed above, it's evident that residents in close proximity will be exposed to very high unsafe levels of EMF. This will have a significant impact to all the residents within 50-75 feet. As mentioned ,more reference to various NIH research articles on Pubmed can also be provided if needed to reinforce the concerns.

While I am speaking up as a resident of Mission Gardens, there are many other houses and apartment complexes along and near Lafayette St. whose residents will also be impacted by the unsafe levels of EMF.

Even a small risk is substantial for public health safety and can and should not be ignored by authorities; we need to err on the side of caution.

2. **Increased Risk for Catastrophic Accidents and Fire Hazards**: The proposed route intersects with an already congested utility zone along Lafayette Street, heightening the risk of accidents and fire hazards, especially given the proximity to

existing railway lines, residential buildings, and heavy vehicular traffic.

3. **Impact on Home Insurance Costs**: The addition of high-power transmission lines in front of residences introduces additional risk factors that could prompt insurance companies to raise premiums further, exacerbating the already soaring home insurance costs in the Bay Area.
4. **Property Value Concerns**: The aesthetic and health-related concerns associated with the proposed power lines could adversely affect property values in our community, posing a significant concern for homeowners who have invested substantially in their properties.
5. **Aesthetic Impact**: The installation of large electric poles and wires would detract from the visual appeal of our neighborhood, undermining the pride we take in our well-maintained homes and attractive streetscapes.
6. **Complexity and Inconvenience**: The construction and maintenance of these power lines could disrupt our daily lives, leading to noise pollution, road closures, and restricted access to homes. Moreover, frequent power outages and service interruptions may result from ongoing maintenance activities.
7. **Exploring Alternatives**: We urge the city to explore alternative solutions such as upgrading existing lines or implementing underground power lines, despite potentially higher upfront costs. These alternatives offer long-term benefits in terms of safety, reliability, and minimal aesthetic impact. Additionally, investigating advanced technologies and alternative routing options could help mitigate the adverse effects on our community.

I respectfully request a meeting with relevant city officials and representatives from the utility company to discuss these concerns in detail and explore viable solutions. Finding a balance between necessary infrastructure upgrades and

safeguarding the health, safety, and aesthetic integrity of our community is imperative.

As a concerned resident of Santa Clara, and a member of a community directly affected by this proposal, I strongly oppose the installation of power lines in options A and B. I implore Silicon Valley Power to consider alternative options that prioritize public health and safety and minimize adverse impacts on Santa Clara residents.

Thank you for your attention to this pressing matter. I eagerly await your response and the opportunity to collaborate on finding a satisfactory resolution.

Sent from my iPhone

Aparna Raman
1881 Garzoni Pl
Santa Clara
4126086258 (c)

The information contained in this email may be privileged, confidential and exempt from disclosure under applicable law. The information is intended only for the use of the individual or entity to which it is addressed. If you are not the intended recipient or the employee or agent responsible to deliver it to the intended recipient, you are hereby notified that any use, dissemination, distribution or copying of this communication is strictly prohibited. If you have received this message in error, or are not the named recipient(s), please notify the sender immediately by reply email and delete this message from your computer. Thank you

Alternative Solutions Needed: Proposed Power Lines Threaten Public Health

Praveen <praveen.vutukuru@gmail.com>

Fri 5/31/2024 8:30 AM

To:NRS-KRS Project <NRS-KRS@aspeneg.com>;mayorandcouncil@santaclaraca.gov <mayorandcouncil@santaclaraca.gov>; info@siliconvalleypower.com <info@siliconvalleypower.com>;planningcommission@santaclaraca.gov <planningcommission@santaclaraca.gov>;manager@santaclaraca.gov <manager@santaclaraca.gov>; AJackman@santaclaraca.gov <AJackman@santaclaraca.gov>

To Whom It May Concern:

I am a resident of Mission Gardens Community in Santa Clara deeply concerned about the proposed installation of high-power electric transmission lines and poles by Silicon Valley Power (SVP). This project, connecting the Northern Receiving Station (NRS) and Kifer Receiving Station (KRS), poses serious potential health risks for our community.

While I understand the need to upgrade our city's power infrastructure, I strongly oppose Options A and B due to significant concerns surrounding electromagnetic fields (EMFs):

Health Risks of EMF Exposure: Extensive research indicates a possible link between prolonged exposure to high levels of EMFs and adverse health outcomes. These include increased risks of certain cancers, neurological disorders, and other health issues, particularly in children and the elderly.

My research has uncovered compelling evidence supporting these concerns. For instance:

- **Unsafe Levels of Magnetic Fields:** Studies show that magnetic fields generated by high-voltage power lines can significantly exceed safe levels for human exposure. The proposed lines would place residents, especially those on Lafayette Street, within 50 feet of these fields, exposing them to potentially harmful levels of EMF radiation.
- **Scientific Research:** Numerous studies have linked EMF exposure to negative health effects. (I can provide references upon request.)
- **Precautionary Principle:** Even a small risk to public health is significant. We must prioritize caution and err on the side of safety.

Beyond Health:

In addition to the health concerns, the proposed installation also:

- **Increases Risk of Accidents:** The congested utility zone along Lafayette Street, with existing railway lines, residential buildings, and heavy traffic, already poses safety risks. Adding high-voltage lines significantly increases the potential for catastrophic accidents and fire hazards.
- **Impacts Home Insurance Costs:** The presence of high-power lines can lead to increased insurance premiums, further burdening homeowners in our already expensive region.
- **Lowers Property Values:** The health risks and aesthetic concerns associated with power lines could negatively impact property values.
- **Diminishes Aesthetics:** Large poles and wires would detract from the beauty of our neighborhood.

Alternative Solutions:

I urge the city and SVP to prioritize public health and safety by exploring alternative solutions. These could include:

- Upgrading existing power lines.
- Investing in underground power lines (despite potential higher upfront costs).
- Investigating advanced technologies or alternative routes.

Request for Action:

I respectfully request a meeting with city officials and SVP representatives to discuss these concerns in detail and explore viable alternatives. It is crucial to find a solution that balances infrastructure needs with the health, safety, and well-being of Santa Clara residents.

I strongly oppose the installation of power lines in Options A and B and urge Silicon Valley Power to prioritize alternative options that protect our community.

Thank you for your time and consideration.

Sincerely,

Praveen Vutukuru

2002 Garzoni Pl, Santa Clara, CA 95054

650-265-8190

Mission Gardens Community

Concerns Regarding Upcoming High Power Electric Wire Poles in Our Community(Mission Gardens) for the upcoming SVP project connecting the Northern Receiving Station NRS to Kifer receiving station (KRS).

Pavan Batchu <pavan@sitenotesapp.com>

Wed 5/29/2024 9:38 PM

To:NRS-KRS Project <NRS-KRS@aspeneg.com>;mayorandcouncil@santaclaraca.gov <mayorandcouncil@santaclaraca.gov>;info@siliconvalleypower.com <info@siliconvalleypower.com>; planningcommission@santaclaraca.gov <planningcommission@santaclaraca.gov>;manager@santaclaraca.gov <manager@santaclaraca.gov>;AJackman@santaclaraca.gov <AJackman@santaclaraca.gov>

To Whomsoever it may concern,

As a concerned resident of Santa Clara, I am writing to express our apprehensions regarding the proposed installation route for high-power electric transmission lines and poles by Silicon Valley Power (SVP). This initiative is part of the project aimed at connecting the Northern Receiving Station (NRS) and Kifer Receiving Station (KRS).

Having reviewed the materials provided by your office and attended the recent public scoping meeting on May 23, 2024, I have delved into the details of the project. After careful consideration, I must voice my complete opposition to options A and B.

While acknowledging the necessity of upgrading the city's power infrastructure, there are several significant concerns that demand attention:

1. **Health Concerns**: The potential health risks associated with prolonged exposure to unsafe levels of electromagnetic fields (EMFs) emitted by these high-power electric lines are paramount. Numerous studies have

   Residents living in close proximity to these high power lines are at greater risk. I have gone through several medical and scientific research papers published on this matter that support our concern on this matter.
   Here are a few links for reference to some such research articles:

- https://www.ncbi.nlm.nih.gov/pmc/articles/PMC10590107/
- https://www.hydroone.com/poweroutagesandsafety_/corporatehealthandsafety_/EMFs/Transmission_Line_EMF_Fields.pdf
- https://www.emrss.com/blogs/emr-shielding-solutions-blogs/what-are-safe-levels-of-emf

   As a quick overview from these please see below:

   The magnetic field generated by the high power lines is way beyond safe levels for humans. Here is a break up:
   - 115kV power transmission line has a Mean Magnetic Field (mG) of 6.5 at a distance of <50 feet.
   - 230kV power transmission line has a Mean Magnetic Field (mG) of 19.5 at a distance of <50 feet. (ref. Link2)

   As the project stands today, the first row of houses in Mission Gardens on Lafayette Street will be less than 50 feet from the proposed installation point per Route A of these poles.The safe value of magnetic field around humans is 0.7mg (ref. Link3) per numbers listed above, it's evident that residents in close proximity will be exposed to very high unsafe levels of EMF. This will have a significant impact to all the residents within 50-75 feet. As mentioned ,more reference to various NIH research articles on Pubmed can also be provided if needed to reinforce the concerns.

   While I am speaking up as a resident of Mission Gardens, there are many other houses and apartment complexes along and near Lafayette St. whose residents will also be impacted by the unsafe levels of EMF.
   Even a small risk is substantial for public health safety and can and should not be ignored by authorities; we need to err on the side of caution.

2. **Increased Risk for Catastrophic Accidents and Fire Hazards**: The proposed route intersects with an already congested utility zone along Lafayette Street, heightening the risk of accidents and fire hazards, espe
3. **Impact on Home Insurance Costs**: The addition of high-power transmission lines in front of residences introduces additional risk factors that could prompt insurance companies to raise premiums further, exacerba
4. **Property Value Concerns**: The aesthetic and health-related concerns associated with the proposed power lines could adversely affect property values in our community, posing a significant concern for homeowner
5. **Aesthetic Impact**: The installation of large electric poles and wires would detract from the visual appeal of our neighborhood, undermining the pride we take in our well-maintained homes and attractive streetscapes
6. **Complexity and Inconvenience**: The construction and maintenance of these power lines could disrupt our daily lives, leading to noise pollution, road closures, and restricted access to homes. Moreover, frequent p
7. **Exploring Alternatives**: We urge the city to explore alternative solutions such as upgrading existing lines or implementing underground power lines, despite potentially higher upfront costs. These alternatives offer l

I respectfully request a meeting with relevant city officials and representatives from the utility company to discuss these concerns in detail and explore viable solutions. Finding a balance between necessary infrastructure upgrades and safeguarding the health, safety, and aesthetic integrity of our community is imperative.

As a concerned resident of Santa Clara, and a member of a community directly affected by this proposal, I strongly oppose the installation of power lines in options A and B. I implore Silicon Valley Power to consider alternative options that prioritize public health and safety and minimize adverse impacts on Santa Clara residents.

Thank you for your attention to this pressing matter. I eagerly await your response and the opportunity to collaborate on finding a satisfactory resolution.

Pavan Batchu
4470 Moulin Pl
Santa Clara, CA 95054
Mission Gardens

Concerns Regarding Upcoming High Power Electric Wire Poles in Our Community(Mission Gardens) for the upcoming SVP project connecting the Northern Receiving Station NRS to Kifer receiving station (KRS).

Ruhi Batchu <ruhi.batchu@gmail.com>

Wed 5/29/2024 9:40 PM

To:NRS-KRS Project <NRS-KRS@aspeneg.com>;mayorandcouncil@santaclaraca.gov <mayorandcouncil@santaclaraca.gov>; info@siliconvalleypower.com <info@siliconvalleypower.com>;planningcommission@santaclaraca.gov <planningcommission@santaclaraca.gov>;manager@santaclaraca.gov <manager@santaclaraca.gov>; AJackman@santaclaraca.gov <AJackman@santaclaraca.gov>

To Whomsoever it may concern,

As a concerned resident of Santa Clara, I am writing to express our apprehensions regarding the proposed installation route for high-power electric transmission lines and poles by Silicon Valley Power (SVP). This initiative is part of the project aimed at connecting the Northern Receiving Station (NRS) and Kifer Receiving Station (KRS).

Having reviewed the materials provided by your office and attended the recent public scoping meeting on May 23, 2024, I have delved into the details of the project. After careful consideration, I must voice my complete opposition to options A and B.

While acknowledging the necessity of upgrading the city's power infrastructure, there are several significant concerns that demand attention:

1. **Health Concerns**: The potential health risks associated with prolonged exposure to unsafe levels of electromagnetic fields (EMFs) emitted by these high-power electric lines are paramount. Numerous studies have indicated a possible correlation between EMF exposure and various health issues, including heightened risks of certain cancers and neurological disorders, especially in children and the elderly. I have extensively researched this topic and found compelling evidence supporting these concerns. For instance, there is extensive research supporting that magnetic fields generated by the proposed power lines far exceed safe levels for human exposure, posing significant risks to residents, particularly those living within close proximity to the installation site.

   Residents living in close proximity to these high power lines are at greater risk. I have gone through several medical and scientific research papers published on this matter that support our concern on this matter. Here are a few links for reference to some such research articles:

- https://www.ncbi.nlm.nih.gov/pmc/articles/PMC10590107/
- https://www.hydroone.com/poweroutagesandsafety_/corporatehealthandsafety_/EMFs/Transmission_Line_EMF_Fields.pdf
- https://www.emrss.com/blogs/emr-shielding-solutions-blogs/what-are-safe-levels-of-emf

As a quick overview from these please see below:

The magnetic field generated by the high power lines is way beyond safe levels for humans. Here is a break up:

- 115kV power transmission line has a Mean Magnetic Field (mG) of 6.5 at a distance of <50 feet.
- 230kV power transmission line has a Mean Magnetic Field (mG) of 19.5 at a distance of <50 feet. (ref. Link2)

As the project stands today, the first row of houses in Mission Gardens on Lafayette Street will be less than 50 feet from the proposed installation point per Route A of these poles.The safe value of magnetic field around humans is 0.7mg (ref. Link3) per numbers listed above, it's evident that residents in close proximity will be exposed to very high unsafe levels of EMF. This will have a significant impact to all the residents within

50-75 feet. As mentioned ,more reference to various NIH research articles on Pubmed can also be provided if needed to reinforce the concerns.

While I am speaking up as a resident of Mission Gardens, there are many other houses and apartment complexes along and near Lafayette St. whose residents will also be impacted by the unsafe levels of EMF. Even a small risk is substantial for public health safety and can and should not be ignored by authorities; we need to err on the side of caution.

2. **Increased Risk for Catastrophic Accidents and Fire Hazards**: The proposed route intersects with an already congested utility zone along Lafayette Street, heightening the risk of accidents and fire hazards, especially given the proximity to existing railway lines, residential buildings, and heavy vehicular traffic.
3. **Impact on Home Insurance Costs**: The addition of high-power transmission lines in front of residences introduces additional risk factors that could prompt insurance companies to raise premiums further, exacerbating the already soaring home insurance costs in the Bay Area.
4. **Property Value Concerns**: The aesthetic and health-related concerns associated with the proposed power lines could adversely affect property values in our community, posing a significant concern for homeowners who have invested substantially in their properties.
5. **Aesthetic Impact**: The installation of large electric poles and wires would detract from the visual appeal of our neighborhood, undermining the pride we take in our well-maintained homes and attractive streetscapes.
6. **Complexity and Inconvenience**: The construction and maintenance of these power lines could disrupt our daily lives, leading to noise pollution, road closures, and restricted access to homes. Moreover, frequent power outages and service interruptions may result from ongoing maintenance activities.
7. **Exploring Alternatives**: We urge the city to explore alternative solutions such as upgrading existing lines or implementing underground power lines, despite potentially higher upfront costs. These alternatives offer long-term benefits in terms of safety, reliability, and minimal aesthetic impact. Additionally, investigating advanced technologies and alternative routing options could help mitigate the adverse effects on our community.

I respectfully request a meeting with relevant city officials and representatives from the utility company to discuss these concerns in detail and explore viable solutions. Finding a balance between necessary infrastructure upgrades and safeguarding the health, safety, and aesthetic integrity of our community is imperative.

As a concerned resident of Santa Clara, and a member of a community directly affected by this proposal, I strongly oppose the installation of power lines in options A and B. I implore Silicon Valley Power to consider alternative options that prioritize public health and safety and minimize adverse impacts on Santa Clara residents.

Thank you for your attention to this pressing matter. I eagerly await your response and the opportunity to collaborate on finding a satisfactory resolution.

Ruhi Batchu
4470 Moulin Pl
Santa Clara, 95054
Mission Gardens

Concerns Regarding Upcoming High Power Electric Wire Poles in Our Community(Mission Gardens) for the upcoming SVP project connecting the Northern Receiving Station NRS to Kifer receiving station (KRS).

Ravi Krishna <dockalp.ravi@gmail.com>

Wed 5/29/2024 10:07 PM

To:AJackman@santaclaraca.gov <AJackman@santaclaraca.gov>;Ajackman@santaclara-ca.gov <Ajackman@santaclara-ca.gov>; NRS-KRS Project <NRS-KRS@aspeneg.com>;info@siliconvalleypower.com <info@siliconvalleypower.com>; manager@santaclaraca.gov <manager@santaclaraca.gov>;mayorandcouncil@santaclaraca.gov <mayorandcouncil@santaclaraca.gov>;planningcommission@santaclaraca.gov <planningcommission@santaclaraca.gov>

To Whomsoever it may concern,

As a concerned resident of Santa Clara, I am writing to express our apprehensions regarding the proposed installation route for high-power electric transmission lines and poles by Silicon Valley Power (SVP). This initiative is part of the project aimed at connecting the Northern Receiving Station (NRS) and Kifer Receiving Station (KRS).

Having reviewed the materials provided by your office and attended the recent public scoping meeting on May 23, 2024, I have delved into the details of the project. After careful consideration, I must voice my complete opposition to options A and B.

While acknowledging the necessity of upgrading the city's power infrastructure, there are several significant concerns that demand attention:

1. **Health Concerns**: The potential health risks associated with prolonged exposure to unsafe levels of electromagnetic fields (EMFs) emitted by these high-power electric lines are paramount. Numerous studies have indicated a possible correlation between EMF exposure and various health issues, including heightened risks of certain cancers and neurological disorders, especially in children and the elderly. I have extensively researched this topic and found compelling evidence supporting these concerns. For instance, there is extensive research supporting that magnetic fields generated by the proposed power lines far exceed safe levels for human exposure, posing significant risks to residents, particularly those living within close proximity to the installation site.

   Residents living in close proximity to these high power lines are at greater risk. I have gone through several medical and scientific research papers published on this matter that support our concern on this matter.
   Here are a few links for reference to some such research articles:

- https://www.ncbi.nlm.nih.gov/pmc/articles/PMC10590107/
- https://www.hydroone.com/poweroutagesandsafety_/corporatehealthandsafety_/EMFs/Transmission_Line_EMF_Fields.pdf
- https://www.emrss.com/blogs/emr-shielding-solutions-blogs/what-are-safe-levels-of-emf

   As a quick overview from these please see below:

   The magnetic field generated by the high power lines is way beyond safe levels for humans. Here is a break up:

- 115kV power transmission line has a Mean Magnetic Field (mG) of 6.5 at a distance of <50 feet.
- 230kV power transmission line has a Mean Magnetic Field (mG) of 19.5 at a distance of <50 feet. (ref. Link2)

As the project stands today, the first row of houses in Mission Gardens on Lafayette Street will be less than 50 feet from the proposed installation point per Route A of these poles.The safe value of magnetic field around humans is 0.7mg (ref. Link3) per numbers listed above, it's evident that residents in close proximity will be exposed to very high unsafe levels of EMF. This will have a significant impact to all the residents within 50-75 feet. As mentioned ,more reference to various NIH research articles on Pubmed can also be provided if needed to reinforce the concerns.

While I am speaking up as a resident of Mission Gardens, there are many other houses and apartment complexes along and near Lafayette St. whose residents will also be impacted by the unsafe levels of EMF.
Even a small risk is substantial for public health safety and can and should not be ignored by authorities; we need to err on the side of caution.

2. **Increased Risk for Catastrophic Accidents and Fire Hazards**: The proposed route intersects with an already congested utility zone along Lafayette Street, heightening the risk of accidents and fire hazards, especially given the proximity to existing railway lines, residential buildings, and heavy vehicular traffic.
3. **Impact on Home Insurance Costs**: The addition of high-power transmission lines in front of residences introduces additional risk factors that could prompt insurance companies to raise premiums further, exacerbating the already soaring home insurance costs in the Bay Area.
4. **Property Value Concerns**: The aesthetic and health-related concerns associated with the proposed power lines could adversely affect property values in our community, posing a significant concern for homeowners who have invested substantially in their properties.
5. **Aesthetic Impact**: The installation of large electric poles and wires would detract from the visual appeal of our neighborhood, undermining the pride we take in our well-maintained homes and attractive streetscapes.
6. **Complexity and Inconvenience**: The construction and maintenance of these power lines could disrupt our daily lives, leading to noise pollution, road closures, and restricted access to homes. Moreover, frequent power outages and service interruptions may result from ongoing maintenance activities.
7. **Exploring Alternatives**: We urge the city to explore alternative solutions such as upgrading existing lines or implementing underground power lines, despite potentially higher upfront costs. These alternatives offer long-term benefits in terms of safety, reliability, and minimal aesthetic impact. Additionally, investigating advanced technologies and alternative routing options could help mitigate the adverse effects on our community.

I respectfully request a meeting with relevant city officials and representatives from the utility company to discuss these concerns in detail and explore viable solutions. Finding a balance between necessary infrastructure upgrades and safeguarding the health, safety, and aesthetic integrity of our community is imperative.

As a concerned resident of Santa Clara, and a member of a community directly affected by this proposal, I strongly oppose the installation of power lines in options A and B. I implore Silicon Valley

Power to consider alternative options that prioritize public health and safety and minimize adverse impacts on Santa Clara residents.

Thank you for your attention to this pressing matter. I eagerly await your response and the opportunity to collaborate on finding a satisfactory resolution.

Ravi Krishna Adusumalli
1834 garzoni place , Santa Clara, CA-95054
Mission Gardens community

Concerns Regarding Upcoming High Power Electric Wire Poles in Our Community(Mission Gardens) for the upcoming SVP project connecting the Northern Receiving Station NRS to Kifer receiving station (KRS).

srinivas dangeti <dsrinu06@gmail.com>

Wed 5/29/2024 10:13 PM

To:NRS-KRS Project <NRS-KRS@aspeneg.com>;mayorandcouncil@santaclaraca.gov <mayorandcouncil@santaclaraca.gov>;info@siliconvalleypower.com <info@siliconvalleypower.com>; planningcommission@santaclaraca.gov <planningcommission@santaclaraca.gov>;manager@santaclaraca.gov <manager@santaclaraca.gov>;AJackman@santaclaraca.gov <AJackman@santaclaraca.gov>

To Whomsoever it may concern,

As a concerned resident of Santa Clara, I am writing to express our apprehensions regarding the proposed installation route for high-power electric transmission lines and poles by Silicon Valley Power (SVP). This initiative is part of the project aimed at connecting the Northern Receiving Station (NRS) and Kifer Receiving Station (KRS).

Having reviewed the materials provided by your office and attended the recent public scoping meeting on May 23, 2024, I have delved into the details of the project. After careful consideration, I must voice my complete opposition to options A and B.

While acknowledging the necessity of upgrading the city's power infrastructure, there are several significant concerns that demand attention:

1. **Health Concerns**: The potential health risks associated with prolonged exposure to unsafe levels of electromagnetic fields (EMFs) emitted by these high-power

   Residents living in close proximity to these high power lines are at greater risk. I have gone through several medical and scientific research papers published on this matter that support our concern on this matter.
   Here are a few links for reference to some such research articles:

- https://www.ncbi.nlm.nih.gov/pmc/articles/PMC10590107/
- https://www.hydroone.com/poweroutagesandsafety_/corporatehealthandsafety_/EMFs/Transmission_Line_EMF_Fields.pdf
- https://www.emrss.com/blogs/emr-shielding-solutions-blogs/what-are-safe-levels-of-emf

   As a quick overview from these please see below:

   The magnetic field generated by the high power lines is way beyond safe levels for humans. Here is a break up:
   - 115kV power transmission line has a Mean Magnetic Field (mG) of 6.5 at a distance of <50 feet.
   - 230kV power transmission line has a Mean Magnetic Field (mG) of 19.5 at a distance of <50 feet. (ref. Link2)

   As the project stands today, the first row of houses in Mission Gardens on Lafayette Street will be less than 50 feet from the proposed installation point per Route A of these poles.The safe value of magnetic field around humans is 0.7mg (ref. Link3) per numbers listed above, it's evident that residents in close proximity will be exposed to very high unsafe levels of EMF. This will have a significant impact to all the residents within 50-75 feet. As mentioned ,more reference to various NIH research articles on Pubmed can also be provided if needed to reinforce the concerns.

   While I am speaking up as a resident of Mission Gardens, there are many other houses and apartment complexes along and near Lafayette St. whose residents will also be impacted by the unsafe levels of EMF.
   Even a small risk is substantial for public health safety and can and should not be ignored by authorities; we need to err on the side of caution.

2. **Increased Risk for Catastrophic Accidents and Fire Hazards**: The proposed route intersects with an already congested utility zone along Lafayette Street, he
3. **Impact on Home Insurance Costs**: The addition of high-power transmission lines in front of residences introduces additional risk factors that could prompt insu
4. **Property Value Concerns**: The aesthetic and health-related concerns associated with the proposed power lines could adversely affect property values in our co
5. **Aesthetic Impact**: The installation of large electric poles and wires would detract from the visual appeal of our neighborhood, undermining the pride we take in c
6. **Complexity and Inconvenience**: The construction and maintenance of these power lines could disrupt our daily lives, leading to noise pollution, road closures,
7. **Exploring Alternatives**: We urge the city to explore alternative solutions such as upgrading existing lines or implementing underground power lines, despite pot

I respectfully request a meeting with relevant city officials and representatives from the utility company to discuss these concerns in detail and explore viable solutions. Finding a balance between necessary infrastructure upgrades and safeguarding the health, safety, and aesthetic integrity of our community is imperative.

As a concerned resident of Santa Clara, and a member of a community directly affected by this proposal, I strongly oppose the installation of power lines in options A and B. I implore Silicon Valley Power to consider alternative options that prioritize public health and safety and minimize adverse impacts on Santa Clara residents.

Thank you for your attention to this pressing matter. I eagerly await your response and the opportunity to collaborate on finding a satisfactory resolution.

Srinivas Dangeti
1878 Garzoni place
Santa Clara, CA 95054
Mission Gardens

Concerns Regarding Upcoming High Power Electric Wire Poles in Our Community(Mission Gardens) for the upcoming SVP project connecting the Northern Receiving Station NRS to Kifer receiving station (KRS).

Ravi Krishna <dockalp.ravi@gmail.com>

Wed 5/29/2024 10:07 PM

To:AJackman@santaclaraca.gov <AJackman@santaclaraca.gov>;Ajackman@santaclara-ca.gov <Ajackman@santaclara-ca.gov>; NRS-KRS Project <NRS-KRS@aspeneg.com>;info@siliconvalleypower.com <info@siliconvalleypower.com>; manager@santaclaraca.gov <manager@santaclaraca.gov>;mayorandcouncil@santaclaraca.gov <mayorandcouncil@santaclaraca.gov>;planningcommission@santaclaraca.gov <planningcommission@santaclaraca.gov>

To Whomsoever it may concern,

As a concerned resident of Santa Clara, I am writing to express our apprehensions regarding the proposed installation route for high-power electric transmission lines and poles by Silicon Valley Power (SVP). This initiative is part of the project aimed at connecting the Northern Receiving Station (NRS) and Kifer Receiving Station (KRS).

Having reviewed the materials provided by your office and attended the recent public scoping meeting on May 23, 2024, I have delved into the details of the project. After careful consideration, I must voice my complete opposition to options A and B.

While acknowledging the necessity of upgrading the city's power infrastructure, there are several significant concerns that demand attention:

1. **Health Concerns**: The potential health risks associated with prolonged exposure to unsafe levels of electromagnetic fields (EMFs) emitted by these high-power electric lines are paramount. Numerous studies have indicated a possible correlation between EMF exposure and various health issues, including heightened risks of certain cancers and neurological disorders, especially in children and the elderly. I have extensively researched this topic and found compelling evidence supporting these concerns. For instance, there is extensive research supporting that magnetic fields generated by the proposed power lines far exceed safe levels for human exposure, posing significant risks to residents, particularly those living within close proximity to the installation site.

   Residents living in close proximity to these high power lines are at greater risk. I have gone through several medical and scientific research papers published on this matter that support our concern on this matter.
   Here are a few links for reference to some such research articles:

- https://www.ncbi.nlm.nih.gov/pmc/articles/PMC10590107/
- https://www.hydroone.com/poweroutagesandsafety_/corporatehealthandsafety_/EMFs/Transmission_Line_EMF_Fields.pdf
- https://www.emrss.com/blogs/emr-shielding-solutions-blogs/what-are-safe-levels-of-emf

   As a quick overview from these please see below:

   The magnetic field generated by the high power lines is way beyond safe levels for humans. Here is a break up:

- 115kV power transmission line has a Mean Magnetic Field (mG) of 6.5 at a distance of <50 feet.
- 230kV power transmission line has a Mean Magnetic Field (mG) of 19.5 at a distance of <50 feet. (ref. Link2)

As the project stands today, the first row of houses in Mission Gardens on Lafayette Street will be less than 50 feet from the proposed installation point per Route A of these poles.The safe value of magnetic field around humans is 0.7mg (ref. Link3) per numbers listed above, it's evident that residents in close proximity will be exposed to very high unsafe levels of EMF. This will have a significant impact to all the residents within 50-75 feet. As mentioned ,more reference to various NIH research articles on Pubmed can also be provided if needed to reinforce the concerns.

While I am speaking up as a resident of Mission Gardens, there are many other houses and apartment complexes along and near Lafayette St. whose residents will also be impacted by the unsafe levels of EMF.
Even a small risk is substantial for public health safety and can and should not be ignored by authorities; we need to err on the side of caution.

2. **Increased Risk for Catastrophic Accidents and Fire Hazards**: The proposed route intersects with an already congested utility zone along Lafayette Street, heightening the risk of accidents and fire hazards, especially given the proximity to existing railway lines, residential buildings, and heavy vehicular traffic.
3. **Impact on Home Insurance Costs**: The addition of high-power transmission lines in front of residences introduces additional risk factors that could prompt insurance companies to raise premiums further, exacerbating the already soaring home insurance costs in the Bay Area.
4. **Property Value Concerns**: The aesthetic and health-related concerns associated with the proposed power lines could adversely affect property values in our community, posing a significant concern for homeowners who have invested substantially in their properties.
5. **Aesthetic Impact**: The installation of large electric poles and wires would detract from the visual appeal of our neighborhood, undermining the pride we take in our well-maintained homes and attractive streetscapes.
6. **Complexity and Inconvenience**: The construction and maintenance of these power lines could disrupt our daily lives, leading to noise pollution, road closures, and restricted access to homes. Moreover, frequent power outages and service interruptions may result from ongoing maintenance activities.
7. **Exploring Alternatives**: We urge the city to explore alternative solutions such as upgrading existing lines or implementing underground power lines, despite potentially higher upfront costs. These alternatives offer long-term benefits in terms of safety, reliability, and minimal aesthetic impact. Additionally, investigating advanced technologies and alternative routing options could help mitigate the adverse effects on our community.

I respectfully request a meeting with relevant city officials and representatives from the utility company to discuss these concerns in detail and explore viable solutions. Finding a balance between necessary infrastructure upgrades and safeguarding the health, safety, and aesthetic integrity of our community is imperative.

As a concerned resident of Santa Clara, and a member of a community directly affected by this proposal, I strongly oppose the installation of power lines in options A and B. I implore Silicon Valley

Power to consider alternative options that prioritize public health and safety and minimize adverse impacts on Santa Clara residents.

Thank you for your attention to this pressing matter. I eagerly await your response and the opportunity to collaborate on finding a satisfactory resolution.

Ravi Krishna Adusumalli
1834 garzoni place , Santa Clara, CA-95054
Mission Gardens community

Concerns Regarding Upcoming High Power Electric Wire Poles in Our Community(Mission Gardens) for the upcoming SVP project connecting the Northern Receiving Station NRS to Kifer receiving station (KRS).

Hasitha Dangeti <hasitha.dangeti06@gmail.com>

Wed 5/29/2024 10:16 PM

To:NRS-KRS Project <NRS-KRS@aspeneg.com>;mayorandcouncil@santaclaraca.gov <mayorandcouncil@santaclaraca.gov>; info@siliconvalleypower.com <info@siliconvalleypower.com>;planningcommission@santaclaraca.gov <planningcommission@santaclaraca.gov>;manager@santaclaraca.gov <manager@santaclaraca.gov>; AJackman@santaclaraca.gov <AJackman@santaclaraca.gov>

To Whomsoever it may concern,

As a concerned resident of Santa Clara, I am writing to express our apprehensions regarding the proposed installation route for high-power electric transmission lines and poles by Silicon Valley Power (SVP). This initiative is part of the project aimed at connecting the Northern Receiving Station (NRS) and Kifer Receiving Station (KRS).

Having reviewed the materials provided by your office and attended the recent public scoping meeting on May 23, 2024, I have delved into the details of the project. After careful consideration, I must voice my complete opposition to options A and B.

While acknowledging the necessity of upgrading the city's power infrastructure, there are several significant concerns that demand attention:

1. **Health Concerns**: The potential health risks associated with prolonged exposure to unsafe levels of electromagnetic fields (EMFs) emitted by these high-power electric lines are paramount. Numerous studies have indicated a possible correlation between EMF exposure and various health issues, including heightened risks of certain cancers and neurological disorders, especially in children and the elderly. I have extensively researched this topic and found compelling evidence supporting these concerns. For instance, there is extensive research supporting that magnetic fields generated by the proposed power lines far exceed safe levels for human exposure, posing significant risks to residents, particularly those living within close proximity to the installation site.

   Residents living in close proximity to these high power lines are at greater risk. I have gone through several medical and scientific research papers published on this matter that support our concern on this matter.
   Here are a few links for reference to some such research articles:

- https://www.ncbi.nlm.nih.gov/pmc/articles/PMC10590107/
- https://www.hydroone.com/poweroutagesandsafety_/corporatehealthandsafety_/EMFs/Transmission_Line_EMF_Fields.pdf
- https://www.emrss.com/blogs/emr-shielding-solutions-blogs/what-are-safe-levels-of-emf

   As a quick overview from these please see below:

   The magnetic field generated by the high power lines is way beyond safe levels for humans. Here is a break up:

   - 115kV power transmission line has a Mean Magnetic Field (mG) of 6.5 at a distance of <50 feet.

- 230kV power transmission line has a Mean Magnetic Field (mG) of 19.5 at a distance of <50 feet. (ref. Link2)

As the project stands today, the first row of houses in Mission Gardens on Lafayette Street will be less than 50 feet from the proposed installation point per Route A of these poles.The safe value of magnetic field around humans is 0.7mg (ref. Link3) per numbers listed above, it's evident that residents in close proximity will be exposed to very high unsafe levels of EMF. This will have a significant impact to all the residents within 50-75 feet. As mentioned ,more reference to various NIH research articles on Pubmed can also be provided if needed to reinforce the concerns.

While I am speaking up as a resident of Mission Gardens, there are many other houses and apartment complexes along and near Lafayette St. whose residents will also be impacted by the unsafe levels of EMF.
Even a small risk is substantial for public health safety and can and should not be ignored by authorities; we need to err on the side of caution.

2. **Increased Risk for Catastrophic Accidents and Fire Hazards**: The proposed route intersects with an already congested utility zone along Lafayette Street, heightening the risk of accidents and fire hazards, especially given the proximity to existing railway lines, residential buildings, and heavy vehicular traffic.
3. **Impact on Home Insurance Costs**: The addition of high-power transmission lines in front of residences introduces additional risk factors that could prompt insurance companies to raise premiums further, exacerbating the already soaring home insurance costs in the Bay Area.
4. **Property Value Concerns**: The aesthetic and health-related concerns associated with the proposed power lines could adversely affect property values in our community, posing a significant concern for homeowners who have invested substantially in their properties.
5. **Aesthetic Impact**: The installation of large electric poles and wires would detract from the visual appeal of our neighborhood, undermining the pride we take in our well-maintained homes and attractive streetscapes.
6. **Complexity and Inconvenience**: The construction and maintenance of these power lines could disrupt our daily lives, leading to noise pollution, road closures, and restricted access to homes. Moreover, frequent power outages and service interruptions may result from ongoing maintenance activities.
7. **Exploring Alternatives**: We urge the city to explore alternative solutions such as upgrading existing lines or implementing underground power lines, despite potentially higher upfront costs. These alternatives offer long-term benefits in terms of safety, reliability, and minimal aesthetic impact. Additionally, investigating advanced technologies and alternative routing options could help mitigate the adverse effects on our community.

I respectfully request a meeting with relevant city officials and representatives from the utility company to discuss these concerns in detail and explore viable solutions. Finding a balance between necessary infrastructure upgrades and safeguarding the health, safety, and aesthetic integrity of our community is imperative.

As a concerned resident of Santa Clara, and a member of a community directly affected by this proposal, I strongly oppose the installation of power lines in options A and B. I implore Silicon Valley Power to consider alternative options that prioritize public health and safety and minimize adverse impacts on Santa Clara residents.

Thank you for your attention to this pressing matter. I eagerly await your response and the opportunity to collaborate on finding a satisfactory resolution.

Hasitha Dangeti
1878 Garzoni place
Santa Clara, CA 95054
Mission Gardens

Concerns Regarding Upcoming High Power Electric Wire Poles in Our Community(Mission Gardens) for the upcoming SVP project connecting the Northern Receiving Station NRS to Kifer receiving station (KRS).

Swapna Dangeti <swapna.dangeti@gmail.com>

Wed 5/29/2024 10:17 PM

To:NRS-KRS Project <NRS-KRS@aspeneg.com>;mayorandcouncil@santaclaraca.gov <mayorandcouncil@santaclaraca.gov>; info@siliconvalleypower.com <info@siliconvalleypower.com>;planningcommission@santaclaraca.gov <planningcommission@santaclaraca.gov>;manager@santaclaraca.gov <manager@santaclaraca.gov>; AJackman@santaclaraca.gov <AJackman@santaclaraca.gov>

To Whomsoever it may concern,

As a concerned resident of Santa Clara, I am writing to express our apprehensions regarding the proposed installation route for high-power electric transmission lines and poles by Silicon Valley Power (SVP). This initiative is part of the project aimed at connecting the Northern Receiving Station (NRS) and Kifer Receiving Station (KRS).

Having reviewed the materials provided by your office and attended the recent public scoping meeting on May 23, 2024, I have delved into the details of the project. After careful consideration, I must voice my complete opposition to options A and B.

While acknowledging the necessity of upgrading the city's power infrastructure, there are several significant concerns that demand attention:

1. **Health Concerns**: The potential health risks associated with prolonged exposure to unsafe levels of electromagnetic fields (EMFs) emitted by these high-power electric lines are paramount. Numerous studies have indicated a possible correlation between EMF exposure and various health issues, including heightened risks of certain cancers and neurological disorders, especially in children and the elderly. I have extensively researched this topic and found compelling evidence supporting these concerns. For instance, there is extensive research supporting that magnetic fields generated by the proposed power lines far exceed safe levels for human exposure, posing significant risks to residents, particularly those living within close proximity to the installation site.

   Residents living in close proximity to these high power lines are at greater risk. I have gone through several medical and scientific research papers published on this matter that support our concern on this matter.
   Here are a few links for reference to some such research articles:

- https://www.ncbi.nlm.nih.gov/pmc/articles/PMC10590107/
- https://www.hydroone.com/poweroutagesandsafety_/corporatehealthandsafety_/EMFs/Transmission_Line_EMF_Fields.pdf
- https://www.emrss.com/blogs/emr-shielding-solutions-blogs/what-are-safe-levels-of-emf

   As a quick overview from these please see below:

   The magnetic field generated by the high power lines is way beyond safe levels for humans. Here is a break up:

   - 115kV power transmission line has a Mean Magnetic Field (mG) of 6.5 at a distance of <50 feet.

- 230kV power transmission line has a Mean Magnetic Field (mG) of 19.5 at a distance of <50 feet. (ref. Link2)

As the project stands today, the first row of houses in Mission Gardens on Lafayette Street will be less than 50 feet from the proposed installation point per Route A of these poles.The safe value of magnetic field around humans is 0.7mg (ref. Link3) per numbers listed above, it's evident that residents in close proximity will be exposed to very high unsafe levels of EMF. This will have a significant impact to all the residents within 50-75 feet. As mentioned ,more reference to various NIH research articles on Pubmed can also be provided if needed to reinforce the concerns.

While I am speaking up as a resident of Mission Gardens, there are many other houses and apartment complexes along and near Lafayette St. whose residents will also be impacted by the unsafe levels of EMF.
Even a small risk is substantial for public health safety and can and should not be ignored by authorities; we need to err on the side of caution.

2. **Increased Risk for Catastrophic Accidents and Fire Hazards**: The proposed route intersects with an already congested utility zone along Lafayette Street, heightening the risk of accidents and fire hazards, especially given the proximity to existing railway lines, residential buildings, and heavy vehicular traffic.
3. **Impact on Home Insurance Costs**: The addition of high-power transmission lines in front of residences introduces additional risk factors that could prompt insurance companies to raise premiums further, exacerbating the already soaring home insurance costs in the Bay Area.
4. **Property Value Concerns**: The aesthetic and health-related concerns associated with the proposed power lines could adversely affect property values in our community, posing a significant concern for homeowners who have invested substantially in their properties.
5. **Aesthetic Impact**: The installation of large electric poles and wires would detract from the visual appeal of our neighborhood, undermining the pride we take in our well-maintained homes and attractive streetscapes.
6. **Complexity and Inconvenience**: The construction and maintenance of these power lines could disrupt our daily lives, leading to noise pollution, road closures, and restricted access to homes. Moreover, frequent power outages and service interruptions may result from ongoing maintenance activities.
7. **Exploring Alternatives**: We urge the city to explore alternative solutions such as upgrading existing lines or implementing underground power lines, despite potentially higher upfront costs. These alternatives offer long-term benefits in terms of safety, reliability, and minimal aesthetic impact. Additionally, investigating advanced technologies and alternative routing options could help mitigate the adverse effects on our community.

I respectfully request a meeting with relevant city officials and representatives from the utility company to discuss these concerns in detail and explore viable solutions. Finding a balance between necessary infrastructure upgrades and safeguarding the health, safety, and aesthetic integrity of our community is imperative.

As a concerned resident of Santa Clara, and a member of a community directly affected by this proposal, I strongly oppose the installation of power lines in options A and B. I implore Silicon Valley Power to consider alternative options that prioritize public health and safety and minimize adverse impacts on Santa Clara residents.

Thank you for your attention to this pressing matter. I eagerly await your response and the opportunity to collaborate on finding a satisfactory resolution.

Swapna Dangeti
1878 Garzoni place
Santa Clara, CA 95054
Mission Gardens

RE: Concerns Regarding Upcoming High Power Electric Wire Poles in Our Community(Mission Gardens) for the upcoming SVP project connecting the Northern Receiving Station NRS to Kifer receiving station (KRS).

Allie Jackman <AJackman@SantaClaraCA.gov>

Thu 5/30/2024 4:23 PM

To:Shashi <sraj9@yahoo.com>
Cc:NRS-KRS Project <NRS-KRS@aspeneg.com>

Dear Concerned Resident of Santa Clara,

Thank you for submitting a comment on Silicon Valley Power's Northern Receiving Station (NRS) to Kifer Receiving Station (KRS) 115 kV Transmission Line Project. Your comment has been recorded and will be addressed and responded to in detail within the upcoming CEQA document (IS/MND). As a reminder, once the CEQA document is published, there will be another opportunity for public comment. We have added your information to our notification list for this project.

We look forward to continuing to work with you on this important project.

Best regards,

ALLIE JACKMAN, P.E.
Principal Electric Utility Engineer
D: 408-615-6639
881 Martin Avenue, Santa Clara, CA 95050
www.siliconvalleypower.com

From: Shashi <sraj9@yahoo.com>
Sent: Wednesday, May 29, 2024 10:36 PM
To: Allie Jackman <AJackman@SantaClaraCA.gov>
Subject: Concerns Regarding Upcoming High Power Electric Wire Poles in Our Community(Mission Gardens) for the upcoming SVP project connecng the Northern R eceiving Staon NR S to Kifer receiving staon (KR S).

To Whomsoever it may concern,
As a concerned resident of Santa Clara, I am writing to express our apprehensions regarding the proposed installation route for high-power electric transmission lines and poles by Silicon Valley Power (SVP). This initiative is part of the project aimed at connecting the Northern Receiving Station (NRS) and Kifer Receiving Station (KRS).
Having reviewed the materials provided by your office and attended the recent public scoping meeting on May 23, 2024, I have delved into the details of the project. After careful consideration, I must voice my complete opposition to options A and B.
While acknowledging the necessity of upgrading the city's power infrastructure, there are several significant concerns that demand attention:

1. **Health Concerns**: The potential health risks associated with prolonged exposure to unsafe levels of electromagnetic fields (EMFs) emitted by these high-power electric lines are paramount. Numerous studies have indicated a possible correlation between EMF exposure and various health issues, including heightened risks of certain cancers and neurological disorders, especially in children and the elderly. I have extensively researched this topic and found compelling evidence supporting these concerns. For instance, there is extensive research supporting that magnetic fields generated by the proposed power lines far exceed safe levels for human exposure, posing significant risks to residents, particularly those living within close proximity to the installation site.

Residents living in close proximity to these high power lines are at greater risk. I have gone through several medical and scientific research papers published on this matter that support our

concern on this matter.

Here are a few links for reference to some such research articles:

- https://www.ncbi.nlm.nih.gov/pmc/articles/PMC10590107/
- https://www.hydroone.com/poweroutagesandsafety_/corporatehealthandsafety_/EMFs/Transmission_Line_EMF_Fields.pdf
- https://www.emrss.com/blogs/emr-shielding-solutions-blogs/what-are-safe-levels-of-emf

As a quick overview from these please see below:

The magnetic field generated by the high power lines is way beyond safe levels for humans. Here is a break up:

· 115kV power transmission line has a Mean Magnetic Field (mG) of 6.5 at a distance of <50 feet.

· 230kV power transmission line has a Mean Magnetic Field (mG) of 19.5 at a distance of <50 feet. (ref. Link2)

As the project stands today, the first row of houses in Mission Gardens on Lafayette Street will be less than 50 feet from the proposed installation point per Route A of these poles.The safe value of magnetic field around humans is 0.7mg (ref. Link3) per numbers listed above, it's evident that residents in close proximity will be exposed to very high unsafe levels of EMF. This will have a significant impact to all the residents within 50-75 feet. As mentioned ,more reference to various NIH research articles on Pubmed can also be provided if needed to reinforce the concerns.

While I am speaking up as a resident of Mission Gardens, there are many other houses and apartment complexes along and near Lafayette St. whose residents will also be impacted by the unsafe levels of EMF.

Even a small risk is substantial for public health safety and can and should not be ignored by authorities; we need to err on the side of caution.

2. **Increased Risk for Catastrophic Accidents and Fire Hazards**: The proposed route intersects with an already congested utility zone along Lafayette Street, heightening the risk of accidents and fire hazards, especially given the proximity to existing railway lines, residential buildings, and heavy vehicular traffic.
3. **Impact on Home Insurance Costs**: The addition of high-power transmission lines in front of residences introduces additional risk factors that could prompt insurance companies to raise premiums further, exacerbating the already soaring home insurance costs in the Bay Area.
4. **Property Value Concerns**: The aesthetic and health-related concerns associated with the proposed power lines could adversely affect property values in our community, posing a significant concern for homeowners who have invested substantially in their properties.
5. **Aesthetic Impact**: The installation of large electric poles and wires would detract from the visual appeal of our neighborhood, undermining the pride we take in our well-maintained homes and attractive streetscapes.
6. **Complexity and Inconvenience**: The construction and maintenance of these power lines could disrupt our daily lives, leading to noise pollution, road closures, and restricted access to homes. Moreover, frequent power outages and service interruptions may result from ongoing maintenance activities.
7. **Exploring Alternatives**: We urge the city to explore alternative solutions such as upgrading existing lines or implementing underground power lines, despite potentially higher upfront costs. These alternatives offer long-term benefits in terms of safety, reliability, and minimal aesthetic impact. Additionally, investigating advanced technologies and alternative routing options could help mitigate the adverse effects on our community.

I respectfully request a meeting with relevant city officials and representatives from the utility company to discuss these concerns in detail and explore viable solutions. Finding a balance between necessary

infrastructure upgrades and safeguarding the health, safety, and aesthetic integrity of our community is imperative.

As a concerned resident of Santa Clara, and a member of a community directly affected by this proposal, I strongly oppose the installation of power lines in options A and B. I implore Silicon Valley Power to consider alternative options that prioritize public health and safety and minimize adverse impacts on Santa Clara residents.

Thank you for your attention to this pressing matter. I eagerly await your response and the opportunity to collaborate on finding a satisfactory resolution.

Shashi Devaraju
1850 Garzoni Place, Santa Clara, CA 95054
408 429 0217
Mission Gardens

The information contained in this email may be privileged, confidential and exempt from disclosure under applicable law. The information is intended only for the use of the individual or entity to which it is addressed. If you are not the intended recipient or the employee or agent responsible to deliver it to the intended recipient, you are hereby notified that any use, dissemination, distribution or copying of this communication is strictly prohibited. If you have received this message in error, or are not the named recipient(s), please notify the sender immediately by reply email and delete this message from your computer. Thank you

Concerns Regarding Upcoming High Power Electric Wire Poles in Our Community(Mission Gardens) for the upcoming SVP project connecting the Northern Receiving Station NRS to Kifer receiving station (KRS).

Srinivas Reddy <saruva@gmail.com>

Wed 5/29/2024 10:39 PM

To:AJackman@santaclaraca.gov <AJackman@santaclaraca.gov>;NRS-KRS Project <NRS-KRS@aspeneg.com>; mayorandcouncil@santaclaraca.gov <mayorandcouncil@santaclaraca.gov>;info@siliconvalleypower.com <info@siliconvalleypower.com>;planningcommission@santaclaraca.gov <planningcommission@santaclaraca.gov>; manager@santaclaraca.gov <manager@santaclaraca.gov>

To Whomsoever it may concern,
As a concerned resident of Santa Clara, I am writing to express our apprehensions regarding the proposed installation route for high-power electric transmission lines and poles by Silicon Valley Power (SVP). This initiative is part of the project aimed at connecting the Northern Receiving Station (NRS) and Kifer Receiving Station (KRS).

Having reviewed the materials provided by your office and attended the recent public scoping meeting on May 23, 2024, I have delved into the details of the project. After careful consideration, I must voice my complete opposition to options A and B.

While acknowledging the necessity of upgrading the city's power infrastructure, there are several significant concerns that demand attention:

1. **Health Concerns**: The potential health risks associated with prolonged exposure to unsafe levels of electromagnetic fields (EMFs) emitted by these high-power electric lines are paramount. Numerous studies have indicated a possible correlation between EMF exposure and various health issues, including heightened risks of certain cancers and neurological disorders, especially in children and the elderly. I have extensively researched this topic and found

compelling evidence supporting these concerns. For instance, there is extensive research supporting that magnetic fields generated by the proposed power lines far exceed safe levels for human exposure, posing significant risks to residents, particularly those living within close proximity to the installation site.

Residents living in close proximity to these high power lines are at greater risk. I have gone through several medical and scientific research papers published on this matter that support our concern on this matter.
Here are a few links for reference to some such research articles:

- https://www.ncbi.nlm.nih.gov/pmc/articles/PMC10590107/
- https://www.hydroone.com/poweroutagesandsafety_/corporatehealthandsafety_/EMFs/Transmission_Line_EMF_Fields.pdf
- https://www.emrss.com/blogs/emr-shielding-solutions-blogs/what-are-safe-levels-of-emf

As a quick overview from these please see below:

The magnetic field generated by the high power lines is way beyond safe levels for humans. Here is a break up:

Â· 115kV power transmission line has a Mean Magnetic Field (mG) of 6.5 at a distance of <50 feet.
Â· 230kV power transmission line has a Mean Magnetic Field (mG) of 19.5 at a distance of <50 feet. (ref. Link2)

As the project stands today, the first row of houses in Mission Gardens on Lafayette Street will be less than 50 feet from the proposed installation point per Route A of these poles.The safe value of magnetic field around humans is 0.7mg (ref. Link3) per numbers listed above, it's

evident that residents in close proximity will be exposed to very high unsafe levels of EMF. This will have a significant impact to all the residents within 50-75 feet. As mentioned ,more reference to various NIH research articles on Pubmed can also be provided if needed to reinforce the concerns.

While I am speaking up as a resident of Mission Gardens, there are many other houses and apartment complexes along and near Lafayette St. whose residents will also be impacted by the unsafe levels of EMF.
Even a small risk is substantial for public health safety and can and should not be ignored by authorities; we need to err on the side of caution.

2. **Increased Risk for Catastrophic Accidents and Fire Hazards**: The proposed route intersects with an already congested utility zone along Lafayette Street, heightening the risk of accidents and fire hazards, especially given the proximity to existing railway lines, residential buildings, and heavy vehicular traffic.
3. **Impact on Home Insurance Costs**: The addition of high-power transmission lines in front of residences introduces additional risk factors that could prompt insurance companies to raise premiums further, exacerbating the already soaring home insurance costs in the Bay Area.
4. **Property Value Concerns**: The aesthetic and health-related concerns associated with the proposed power lines could adversely affect property values in our community, posing a significant concern for homeowners who have invested substantially in their properties.
5. **Aesthetic Impact**: The installation of large electric poles and wires would detract from the visual appeal of our neighborhood, undermining the pride we take in our well-maintained homes and attractive streetscapes.

6. **Complexity and Inconvenience**: The construction and maintenance of these power lines could disrupt our daily lives, leading to noise pollution, road closures, and restricted access to homes. Moreover, frequent power outages and service interruptions may result from ongoing maintenance activities.
7. **Exploring Alternatives**: We urge the city to explore alternative solutions such as upgrading existing lines or implementing underground power lines, despite potentially higher upfront costs. These alternatives offer long-term benefits in terms of safety, reliability, and minimal aesthetic impact. Additionally, investigating advanced technologies and alternative routing options could help mitigate the adverse effects on our community.

I respectfully request a meeting with relevant city officials and representatives from the utility company to discuss these concerns in detail and explore viable solutions. Finding a balance between necessary infrastructure upgrades and safeguarding the health, safety, and aesthetic integrity of our community is imperative.

As a concerned resident of Santa Clara, and a member of a community directly affected by this proposal, I strongly oppose the installation of power lines in options A and B. I implore Silicon Valley Power to consider alternative options that prioritize public health and safety and minimize adverse impacts on Santa Clara residents.

Thank you for your attention to this pressing matter. I eagerly await your response and the opportunity to collaborate on finding a satisfactory resolution.

Srinivas

1813 Silva Place, Santa Clara

408-373-2893

Mission Gardens

Virus-free.www.avg.com

Re: Concerns Regarding Upcoming High Power Electric Wire Poles in Our Community(Mission Gardens) for the upcoming SVP project connecting the Northern Receiving Station NRS to Kifer receiving station (KRS).

Srinivas <cogred@yahoo.com>

Wed 5/29/2024 10:41 PM

To:AJackman@santaclaraca.gov <AJackman@santaclaraca.gov>;NRS-KRS Project <NRS-KRS@aspeneg.com>; mayorandcouncil@santaclaraca.gov <mayorandcouncil@santaclaraca.gov>;info@siliconvalleypower.com <info@siliconvalleypower.com>;planningcommission@santaclaraca.gov <planningcommission@santaclaraca.gov>; manager@santaclaraca.gov <manager@santaclaraca.gov>

To Whomsoever it may concern,
As a concerned resident of Santa Clara, I am writing to express our apprehensions regarding the proposed installation route for high-power electric transmission lines and poles by Silicon Valley Power (SVP). This initiative is part of the project aimed at connecting the Northern Receiving Station (NRS) and Kifer Receiving Station (KRS).

Having reviewed the materials provided by your office and attended the recent public scoping meeting on May 23, 2024, I have delved into the details of the project. After careful consideration, I must voice my complete opposition to options A and B.

While acknowledging the necessity of upgrading the city's power infrastructure, there are several significant concerns that demand attention:

1. **Health Concerns**: The potential health risks associated with prolonged exposure to unsafe levels of electromagnetic fields (EMFs) emitted by these high-power electric lines are paramount. Numerous studies have indicated a possible correlation between EMF exposure and various health issues, including heightened risks of certain cancers and

neurological disorders, especially in children and the elderly. I have extensively researched this topic and found compelling evidence supporting these concerns. For instance, there is extensive research supporting that magnetic fields generated by the proposed power lines far exceed safe levels for human exposure, posing significant risks to residents, particularly those living within close proximity to the installation site.

Residents living in close proximity to these high power lines are at greater risk. I have gone through several medical and scientific research papers published on this matter that support our concern on this matter.
Here are a few links for reference to some such research articles:

- https://www.ncbi.nlm.nih.gov/pmc/articles/PMC10590107/
- https://www.hydroone.com/poweroutagesandsafety_/corporatehealthandsafety_/EMFs/Transmission_Line_EMF_Fields.pdf
- https://www.emrss.com/blogs/emr-shielding-solutions-blogs/what-are-safe-levels-of-emf

As a quick overview from these please see below:

The magnetic field generated by the high power lines is way beyond safe levels for humans. Here is a break up:

Â· 115kV power transmission line has a Mean Magnetic Field (mG) of 6.5 at a distance of <50 feet.

Â· 230kV power transmission line has a Mean Magnetic Field (mG) of 19.5 at a

distance of <50 feet. (ref. Link2)

As the project stands today, the first row of houses in Mission Gardens on Lafayette Street will be less than 50 feet from the proposed installation point per Route A of these poles.The safe value of magnetic field around humans is 0.7mg (ref. Link3) per numbers listed above, it's evident that residents in close proximity will be exposed to very high unsafe levels of EMF. This will have a significant impact to all the residents within 50-75 feet. As mentioned ,more reference to various NIH research articles on Pubmed can also be provided if needed to reinforce the concerns.

While I am speaking up as a resident of Mission Gardens, there are many other houses and apartment complexes along and near Lafayette St. whose residents will also be impacted by the unsafe levels of EMF.
Even a small risk is substantial for public health safety and can and should not be ignored by authorities; we need to err on the side of caution.

2. **Increased Risk for Catastrophic Accidents and Fire Hazards**: The proposed route intersects with an already congested utility zone along Lafayette Street, heightening the risk of accidents and fire hazards, especially given the proximity to existing railway lines, residential buildings, and heavy vehicular traffic.
3. **Impact on Home Insurance Costs**: The addition of high-power transmission lines in front of residences introduces additional risk factors that could prompt insurance companies to raise premiums further,

exacerbating the already soaring home insurance costs in the Bay Area.

4. **Property Value Concerns**: The aesthetic and health-related concerns associated with the proposed power lines could adversely affect property values in our community, posing a significant concern for homeowners who have invested substantially in their properties.
5. **Aesthetic Impact**: The installation of large electric poles and wires would detract from the visual appeal of our neighborhood, undermining the pride we take in our well-maintained homes and attractive streetscapes.
6. **Complexity and Inconvenience**: The construction and maintenance of these power lines could disrupt our daily lives, leading to noise pollution, road closures, and restricted access to homes. Moreover, frequent power outages and service interruptions may result from ongoing maintenance activities.
7. **Exploring Alternatives**: We urge the city to explore alternative solutions such as upgrading existing lines or implementing underground power lines, despite potentially higher upfront costs. These alternatives offer long-term benefits in terms of safety, reliability, and minimal aesthetic impact. Additionally, investigating advanced technologies and alternative routing options could help mitigate the adverse effects on our community.

I respectfully request a meeting with relevant city officials and representatives from the utility company to discuss these concerns in detail and explore viable solutions. Finding a balance between necessary infrastructure upgrades and safeguarding the health,

safety, and aesthetic integrity of our community is imperative.

As a concerned resident of Santa Clara, and a member of a community directly affected by this proposal, I strongly oppose the installation of power lines in options A and B. I implore Silicon Valley Power to consider alternative options that prioritize public health and safety and minimize adverse impacts on Santa Clara residents.

Thank you for your attention to this pressing matter. I eagerly await your response and the opportunity to collaborate on finding a satisfactory resolution.

Vasanti

1813 Silva Place, Santa Clara

408-373-2893

Mission Gardens

Virus-free.www.avg.com

Concerns Regarding Upcoming High Power Electric Wire Poles in Our Community(Mission Gardens) for the upcoming SVP project connecting the Northern Receiving Station NRS to Kifer receiving station (KRS).

Vishnu H <vishnuhari@gmail.com>

Wed 5/29/2024 11:04 PM

To:AJackman@santaclaraca.gov <AJackman@santaclaraca.gov>;NRS-KRS Project <NRS-KRS@aspeneg.com>;mayorandcouncil@santaclaraca.gov <mayorandcouncil@santaclaraca.gov>; info@siliconvalleypower.com <info@siliconvalleypower.com>;planningcommission@santaclara.gov <planningcommission@santaclara.gov>;manager@santaclara.gov <manager@santaclara.gov>

To Whomsoever it may concern,

As a concerned resident of Santa Clara, I am writing to express our apprehensions regarding the proposed installation route for high-power electric transmission lines and poles by Silicon Valley Power (SVP). This initiative is part of the project aimed at connecting the Northern Receiving Station (NRS) and Kifer Receiving Station (KRS).

Having reviewed the materials provided by your office and attended the recent public scoping meeting on May 23, 2024, I have delved into the details of the project. After careful consideration, I must voice my complete opposition to options A and B.

While acknowledging the necessity of upgrading the city's power infrastructure, there are several significant concerns that demand attention:

1. **Health Concerns**: The potential health risks associated with prolonged exposure to unsafe levels of electromagnetic fields (EMFs) emitted by these high-power

   Residents living in close proximity to these high power lines are at greater risk. I have gone through several medical and scientific research papers published on this matter that support our concern on this matter.
   Here are a few links for reference to some such research articles:

- https://www.ncbi.nlm.nih.gov/pmc/articles/PMC10590107/
- https://www.hydroone.com/poweroutagesandsafety_/corporatehealthandsafety_/EMFs/Transmission_Line_EMF_Fields.pdf
- https://www.emrss.com/blogs/emr-shielding-solutions-blogs/what-are-safe-levels-of-emf

   As a quick overview from these please see below:

   The magnetic field generated by the high power lines is way beyond safe levels for humans. Here is a break up:
   - 115kV power transmission line has a Mean Magnetic Field (mG) of 6.5 at a distance of <50 feet.
   - 230kV power transmission line has a Mean Magnetic Field (mG) of 19.5 at a distance of <50 feet. (ref. Link2)

   As the project stands today, the first row of houses in Mission Gardens on Lafayette Street will be less than 50 feet from the proposed installation point per Route A of these poles.The safe value of magnetic field around humans is 0.7mg (ref. Link3) per numbers listed above, it's evident that residents in close proximity will be exposed to very high unsafe levels of EMF. This will have a significant impact to all the residents within 50-75 feet. As mentioned ,more reference to various NIH research articles on Pubmed can also be provided if needed to reinforce the concerns.

   While I am speaking up as a resident of Mission Gardens, there are many other houses and apartment complexes along and near Lafayette St. whose residents will also be impacted by the unsafe levels of EMF.
   Even a small risk is substantial for public health safety and can and should not be ignored by authorities; we need to err on the side of caution.

2. **Increased Risk for Catastrophic Accidents and Fire Hazards**: The proposed route intersects with an already congested utility zone along Lafayette Street, he
3. **Impact on Home Insurance Costs**: The addition of high-power transmission lines in front of residences introduces additional risk factors that could prompt insu
4. **Property Value Concerns**: The aesthetic and health-related concerns associated with the proposed power lines could adversely affect property values in our co
5. **Aesthetic Impact**: The installation of large electric poles and wires would detract from the visual appeal of our neighborhood, undermining the pride we take in c
6. **Complexity and Inconvenience**: The construction and maintenance of these power lines could disrupt our daily lives, leading to noise pollution, road closures,
7. **Exploring Alternatives**: We urge the city to explore alternative solutions such as upgrading existing lines or implementing underground power lines, despite pot

I respectfully request a meeting with relevant city officials and representatives from the utility company to discuss these concerns in detail and explore viable solutions. Finding a balance between necessary infrastructure upgrades and safeguarding the health, safety, and aesthetic integrity of our community is imperative.

As a concerned resident of Santa Clara, and a member of a community directly affected by this proposal, I strongly oppose the installation of power lines in options A and B. I implore Silicon Valley Power to consider alternative options that prioritize public health and safety and minimize adverse impacts on Santa Clara residents.

Thank you for your attention to this pressing matter. I eagerly await your response and the opportunity to collaborate on finding a satisfactory resolution.

Vishnu Vardhan Hari
4459 Moulin Pl. Santa Clara, CA 95054
408.398.4449
Mission Gardens Community

Concerns Regarding Upcoming High Power Electric Wire Poles in Our Community(Mission Gardens) for the upcoming SVP project connecting the Northern Receiving Station NRS to Kifer receiving station (KRS).

Vidya <srividya.chavali@gmail.com>

Wed 5/29/2024 11:08 PM

To:AJackman@santaclaraca.gov <AJackman@santaclaraca.gov>;NRS-KRS Project <NRS-KRS@aspeneg.com>; mayorandcouncil@santaclaraca.gov <mayorandcouncil@santaclaraca.gov>;info@siliconvalleypower.com <info@siliconvalleypower.com>;planningcommission@santaclara.gov <planningcommission@santaclara.gov>; manager@santaclara.gov <manager@santaclara.gov>

To Whomsoever it may concern,

As a concerned resident of Santa Clara, I am writing to express our apprehensions regarding the proposed installation route for high-power electric transmission lines and poles by Silicon Valley Power (SVP). This initiative is part of the project aimed at connecting the Northern Receiving Station (NRS) and Kifer Receiving Station (KRS).

Having reviewed the materials provided by your office and attended the recent public scoping meeting on May 23, 2024, I have delved into the details of the project. After careful consideration, I must voice my complete opposition to options A and B.

While acknowledging the necessity of upgrading the city's power infrastructure, there are several significant concerns that demand attention:

1. **Health Concerns**: The potential health risks associated with prolonged exposure to unsafe levels of electromagnetic fields (EMFs) emitted by these high-power electric lines are paramount. Numerous studies have indicated a possible correlation between EMF exposure and various health issues, including heightened risks of certain cancers and neurological disorders, especially in children and the elderly. I have extensively researched this topic and found compelling evidence supporting these concerns. For instance, there is extensive research supporting that magnetic fields generated by the proposed power lines far exceed safe levels for human exposure, posing significant risks to residents, particularly those living within close proximity to the installation site.

   Residents living in close proximity to these high power lines are at greater risk. I have gone through several medical and scientific research papers published on this matter that support our concern on this matter.
   Here are a few links for reference to some such research articles:

- https://www.ncbi.nlm.nih.gov/pmc/articles/PMC10590107/
- https://www.hydroone.com/poweroutagesandsafety_/corporatehealthandsafety_/EMFs/Transmission_Line_EMF_Fields.pdf
- https://www.emrss.com/blogs/emr-shielding-solutions-blogs/what-are-safe-levels-of-emf

   As a quick overview from these please see below:

   The magnetic field generated by the high power lines is way beyond safe levels for humans. Here is a break up:

   - 115kV power transmission line has a Mean Magnetic Field (mG) of 6.5 at a distance of <50 feet.

- 230kV power transmission line has a Mean Magnetic Field (mG) of 19.5 at a distance of <50 feet. (ref. Link2)

As the project stands today, the first row of houses in Mission Gardens on Lafayette Street will be less than 50 feet from the proposed installation point per Route A of these poles.The safe value of magnetic field around humans is 0.7mg (ref. Link3) per numbers listed above, it's evident that residents in close proximity will be exposed to very high unsafe levels of EMF. This will have a significant impact to all the residents within 50-75 feet. As mentioned ,more reference to various NIH research articles on Pubmed can also be provided if needed to reinforce the concerns.

While I am speaking up as a resident of Mission Gardens, there are many other houses and apartment complexes along and near Lafayette St. whose residents will also be impacted by the unsafe levels of EMF.
Even a small risk is substantial for public health safety and can and should not be ignored by authorities; we need to err on the side of caution.

2. **Increased Risk for Catastrophic Accidents and Fire Hazards**: The proposed route intersects with an already congested utility zone along Lafayette Street, heightening the risk of accidents and fire hazards, especially given the proximity to existing railway lines, residential buildings, and heavy vehicular traffic.
3. **Impact on Home Insurance Costs**: The addition of high-power transmission lines in front of residences introduces additional risk factors that could prompt insurance companies to raise premiums further, exacerbating the already soaring home insurance costs in the Bay Area.
4. **Property Value Concerns**: The aesthetic and health-related concerns associated with the proposed power lines could adversely affect property values in our community, posing a significant concern for homeowners who have invested substantially in their properties.
5. **Aesthetic Impact**: The installation of large electric poles and wires would detract from the visual appeal of our neighborhood, undermining the pride we take in our well-maintained homes and attractive streetscapes.
6. **Complexity and Inconvenience**: The construction and maintenance of these power lines could disrupt our daily lives, leading to noise pollution, road closures, and restricted access to homes. Moreover, frequent power outages and service interruptions may result from ongoing maintenance activities.
7. **Exploring Alternatives**: We urge the city to explore alternative solutions such as upgrading existing lines or implementing underground power lines, despite potentially higher upfront costs. These alternatives offer long-term benefits in terms of safety, reliability, and minimal aesthetic impact. Additionally, investigating advanced technologies and alternative routing options could help mitigate the adverse effects on our community.

I respectfully request a meeting with relevant city officials and representatives from the utility company to discuss these concerns in detail and explore viable solutions. Finding a balance between necessary infrastructure upgrades and safeguarding the health, safety, and aesthetic integrity of our community is imperative.

As a concerned resident of Santa Clara, and a member of a community directly affected by this proposal, I strongly oppose the installation of power lines in options A and B. I implore Silicon Valley Power to consider alternative options that prioritize public health and safety and minimize adverse impacts on Santa Clara residents.

Thank you for your attention to this pressing matter. I eagerly await your response and the opportunity to collaborate on finding a satisfactory resolution.

Srividya Hari
4459 Moulin Pl. Santa Clara, CA 95054
510.358.1995
Mission Gardens Community

Concerns of upcoming 115 / 230 KV Transmission line off Lafayette Street, Santa Clara

Vijay Divakaruni <vijaya.divakaruni@gmail.com>

Wed 5/29/2024 11:12 PM

To:NRS-KRS Project <NRS-KRS@aspeneg.com>;mayorandcouncil@santaclaraca.gov <mayorandcouncil@santaclaraca.gov>; info@siliconvalleypower.com <info@siliconvalleypower.com>;planningcommission@santaclaraca.gov <planningcommission@santaclaraca.gov>;manager@santaclaraca.gov <manager@santaclaraca.gov>; AJackman@santaclaraca.gov <AJackman@santaclaraca.gov>

Dear Sir / Ma'am,

As a concerned resident of Santa Clara living on Lafayette Street, I am writing to express our apprehensions regarding the proposed installation route for high-power electric transmission lines and poles by Silicon Valley Power (SVP). This initiative is part of the project aimed at connecting the Northern Receiving Station (NRS) and Kifer Receiving Station (KRS).

After careful consideration of reviewing the materials provided by your office and attending the recent public scoping meeting, while acknowledging the necessity of upgrading the city's power infrastructure, I would like to express my opposition to both options A & B. **Options A & B seems like the best option from engineering and financial perspective with no regard to the impact of those transmission lines on citizens who have to live undernath them for ever!**

I tried to list a couple of concerns with a brief reasoning:

- **Health Concerns**: Serious health risks associated with prolonged exposure to **unsafe levels of electromagnetic fields (EMFs) emitted by these high-power electric lines** are paramount. Numerous studies have indicated a possible correlation between EMF exposure and various health issues, including heightened risks of certain cancers and neurological disorders, especially in children and the elderly.
- **Increased Risk for Catastrophic Accidents and Fire Hazards**: The proposed route intersects with an **already congested utility zone along Lafayette Street**, heightening the risk of accidents and fire hazards, especially given the proximity to existing railway lines, residential buildings, and heavy vehicular traffic.
- **Complexity and Inconvenience**: This new addition to the street **causes significant disruptions to residents who live by and must use Lafayette street for our living**. The construction and maintenance of these power lines could disrupt our daily lives, leading to noise pollution, road closures, and restricted access to homes.
- **Impact on Home Insurance Costs**: The addition of high-power transmission lines in front of residences introduces additional risk factors that could prompt insurance companies to raise premiums further, exacerbating the already soaring home insurance costs in the Bay Area.
- **Property Value Concerns**: The aesthetic and health-related concerns associated with the proposed power lines could adversely affect property values in our community, **posing a significant concern for homeowners who have invested their life savings in their homes**. And **not to say how these huge & ugly poles impact the aesthetic value of our neighborhood giving an industrial look than a well-kept residential community**.
- **Exploring Alternatives**: We urge the city to explore alternative solutions such as upgrading existing lines or implementing underground power lines, despite potentially higher upfront costs. These alternatives offer long-term benefits in terms of safety, reliability, and minimal aesthetic impact. Additionally, investigating advanced technologies and alternative routing options could help mitigate the adverse effects on our community.

I respectfully request a meeting with relevant city officials and representatives from the utility company to discuss these concerns in detail and explore viable solutions. Finding a balance between necessary infrastructure upgrades and safeguarding the health, safety, and aesthetic integrity of our community is imperative.

As a concerned resident of Santa Clara, and a member of a community directly affected by this proposal, I strongly oppose the installation of power lines in options A and B. I implore Silicon Valley Power to consider alternative options that prioritize public health and safety and minimize adverse impacts on Santa Clara residents.

Thank you for your attention to this pressing matter. I eagerly await your response and the opportunity to collaborate on finding a satisfactory resolution.

Vijaya Divakaruni
1970 Garzoni Place, Santa Clara
Mission Gardens Townhomes

Appendix G

EMF Report

Silicon Valley Power NRS-KRS 115 kV Transmission Line Project

EMF Report

Prepared For:

Silicon Valley Power NRS-KRS 115 kV Transmission Line Project MND

Prepared By:

Electrical Consultants Inc.

NRS-KRS 115 kV Transmission Line Project

EMF Report

TABLE OF CONTENTS

1 – Overview 3

2 – Project Description 3

3 – Data Gathering Summary 3

3.1 – Data Gathering Process 3

4 – Calculation Summary 4

4.1 – EMF Figure Development & Model Inputs 4

4.2 – Load Flow Data 4

5 – Results 4

6 – References 4

ATTACHMENTS

Attachment A: Transmission Line Information Summary Sheets

Attachment B: Distribution Line Information Summary Sheets

Attachment C: EMF Segment Map

Attachment D: EMF Calculation Tables

Attachment E: EMF Figures

1 – Overview

To support addressing public interest and concern in relation to exposure to electric and magnetic fields (EMF) as part of Silicon Valley Power's (SVP) proposed NRS-KRS Transmission Line Project, a study has been completed to determine the electromagnetic field (EMF) effects of the proposed project. Magnetic field calculations were conducted along the proposed transmission line route to estimate the magnetic field strength when measured 1 meter above ground at various distances from the proposed route centerline. These calculations take into account existing conditions of currently operating power facilities as well as future conditions after installation of the proposed transmission line.

2 – Project Description

The project consists of constructing a new single-circuit 115kV transmission line from Northern Receiving Station (NRS) to the Kifer Receiving Station (KRS). The route considered for this EMF study starts at NRS and follows the median of Lafayette St. to Agnew Rd. After crossing Agnew Rd, the route continues on the east side of Lafayette St. colinear with existing transmission and distribution lines. Before reaching the onramp for Montague Expy. the route crosses Lafayette St. and Bassett St. to continue south along the west side of Bassett St., once again colinear with existing transmission and distribution lines. The route continues south along Bassett St. to the intersection with George St. where Bassett St. turns south. The route crosses Bassett St. at this intersection to continue south on the east side of Bassett St. The route then continues south along Bassett St. until crossing Bayshore Fwy. and continuing into KRS. The total length of the proposed route is about 2.24 miles.

3 – Data Gathering Summary

There are numerous existing power lines within 100 feet of the proposed project centerline. Transmission or distribution lines that run parallel to the proposed centerline for a minimum of 100 feet were deemed long enough to affect the overall EMF of the proposed NRS-KRS transmission line. Therefore, line information was requested and used to complete EMF calculations. Transmission and distribution lines that parallel the transmission line for less than 100 feet or crossed perpendicular to the proposed route were considered non-typical and were excluded from these calculations.

3.1 – Data Gathering Process

Electronic maps of current electric lines and facilities were requested from SVP. After receipt, this electronic data was compared against the proposed centerline and all the facilities that matched the criteria (i.e. within 100 feet of either side of the proposed centerline and running parallel for at least 100 feet) were identified and tabulated. Informational request tables were then compiled and sent to SVP in order to obtain the necessary information to complete the EMF models. Information requests sought existing line information such as voltage, phasing, conductor type, structure configuration, load flow information for the year 2024, forecasted load flow information for the anticipated construction year 2028, and any additional future-date forecasted load flow information if available.

The information for existing transmission lines as well as information for the proposed NRS-KRS transmission line was provided by SVP and is included in Attachment A. The information for existing distribution lines was provided by SVP and is included in Attachment B.

4 – Calculation Summary

Magnetic field profiles were calculated for each typical structure configuration.

4.1 – EMF Figure Development & Model Inputs

The proposed transmission line route was divided into segments representing unique combinations of structure framing, existing power lines, future power lines, and relative distances between existing power lines and the proposed transmission line. These segments are defined in Attachment C. A cross-section figure was then created to represent the typical conditions of each segment and document the inputs used in the magnetic field strength calculation for each segment. Due to minor variations in the installed and proposed facilities within each segment, these cross-section figures and magnetic field strength calculation inputs were created so that the calculated magnetic field strength values would represent the highest expected magnetic field strength for all conditions represented in each segment.

The cross-section figures include the required structure configuration information to properly model the magnetic field strengths in the PLS-CADD modeling software. This information includes the relative conductor attachment dimensions, circuit phasing information, load flow data, and conductor type. Generally the proposed transmission line project will maintain existing power facilities in place. As such each cross-section figure was created to be representative of the existing conditions as well as the future proposed conditions of each segment. The difference in reported magnetic field strengths between the existing condition and future conditions is created by neglecting the contributions due to the proposed transmission line.

4.2 – Load Flow Data

For existing circuits two different years of load flow data were requested: the current year 2024 and year 2028 for the anticipated construction of the proposed NRS-KRS transmission line. For each year, 100 percent of peak load and 80 percent of peak load amperages were requested for use in calculating the corresponding magnetic fields strengths. For the proposed NRS-KRS transmission line, the same data was requested for 2028. EMF calculations were performed for both the existing load data for 2024 and for the anticipated future load data for 2028 including the proposed NRS-KRS transmission line loading. Generally the full reported loading per load case of a given circuit was applied when that given circuit was present in a segment. Additionally loads and relative phase configurations of different circuits were oriented to avoid interference between the calculated magnetic fields of each circuit which would result in a reduction of the reported magnetic field strength. Phase angles were set up to match the standard SVP phasing.

5 – Results

The PLS-CADD modeling software calculates magnetic field strength following the methodology described in *EPRI AC Transmission Line Reference Book*. The results of the EMF study have been organized into tables and figures for inclusion in the MND. The figures are numbered based on the corresponding segment number. The magnetic field strength tables can be found in Attachment D and the transmission line figures can be found in Attachment E. Magnetic field strength values reported as calculated 1 meter above ground. These values are provided up to 60 feet from the proposed NRS-KRS transmission line centerline.

6 – References

1. *EPRI AC Transmission Line Reference Book*

Attachment A: Transmission Line Information Summary Sheets

Overhead Lines					
Existing Information, 2024			Future Information, 2028		
Conductor Type	Peak Load (Amps)	Normal Load (Amps)	Conductor Type	Peak Load (Amps)	Normal Load (Amps)
-	-	-	715KCM 24/7 ACCR "STILT", Bundled	1207	965.6
715KCM 24/7 ACCR "STILT", Bundled	242	193.6	715KCM 24/7 ACCR "STILT", Bundled	242	193.6
715KCM 24/7 ACCR "STILT", Bundled	578	462.4	715KCM 24/7 ACCR "STILT", Bundled	578	462.4

Attachment B: Distribution Line Information Summary Sheets

Overhead Lines					
Existing Information, 2024			Future Information, 2028		
Conductor Type	Peak Load (Amps)	Normal Load (Amps)	Conductor Type	Peak Load (Amps)	Normal Load (Amps)
WIRE, BARE, AL, 397 MCM, 19 STR., 0.724IN O.D., CODE - CANNA	50	40	WIRE, BARE, AL, 397 MCM, 19 STR., 0.724IN O.D., CODE - CANNA	50	40
WIRE, BARE, AL, 397 MCM, 19 STR., 0.724IN O.D., CODE - CANNA	241	192.8	WIRE, BARE, AL, 397 MCM, 19 STR., 0.724IN O.D., CODE - CANNA	241	192.8
WIRE, BARE, AL, 397 MCM, 19 STR., 0.724IN O.D., CODE - CANNA	69	55.2	WIRE, BARE, AL, 397 MCM, 19 STR., 0.724IN O.D., CODE - CANNA	69	55.2
WIRE, BARE, AL, 397 MCM, 19 STR., 0.724IN O.D., CODE - CANNA	111	88.8	WIRE, BARE, AL, 397 MCM, 19 STR., 0.724IN O.D., CODE - CANNA	111	88.8
WIRE, BARE, AL, 397 MCM, 19 STR., 0.724IN O.D., CODE - CANNA	219	175.2	WIRE, BARE, AL, 397 MCM, 19 STR., 0.724IN O.D., CODE - CANNA	219	175.2

Underground Lines					
Existing Information, 2024			Future Information, 2028		
Conductor Type	Peak Load (Amps)	Normal Load (Amps)	Conductor Type	Peak Load (Amps)	Normal Load (Amps)
WIRE, UG, 3/C, AL, EPR 1/0 TRIPLEXED, 1/0 FILLED STRAND 220 MIL EPR (133%) FULL NEUTRAL STRAND JACKETED CABLE	50	40	WIRE, UG, 3/C, AL, EPR 1/0 TRIPLEXED, 1/0 FILLED STRAND 220 MIL EPR (133%) FULL NEUTRAL STRAND JACKETED CABLE	50	40
WIRE, UG, 3/C, AL, 750 MCM TRIPLEXED	241	192.8	WIRE, UG, 3/C, AL, 750 MCM TRIPLEXED	241	192.8
WIRE, UG, 3/C, AL, 750 MCM TRIPLEXED	69	55.2	WIRE, UG, 3/C, AL, 750 MCM TRIPLEXED	69	55.2
WIRE, UG, 3/C, AL, EPR 1/0 TRIPLEXED, 1/0 FILLED STRAND 220 MIL EPR (133%) FULL NEUTRAL STRAND JACKETED CABLE	210	168	WIRE, UG, 3/C, AL, EPR 1/0 TRIPLEXED, 1/0 FILLED STRAND 220 MIL EPR (133%) FULL NEUTRAL STRAND JACKETED CABLE	210	168
WIRE, 1100 KCMIL TRIPLEXED, CLASS A, COMPACT ROUND ALUMINUM CONDUCTOR (61 STRAND), ETHYLENE PROPYLENE RUBBER (EPR) INSULATED, JACKETED CONCENTRIC NEUTRAL CABLE	121	96.8	WIRE, 1100 KCMIL TRIPLEXED, CLASS A, COMPACT ROUND ALUMINUM CONDUCTOR (61 STRAND), ETHYLENE PROPYLENE RUBBER (EPR) INSULATED, JACKETED CONCENTRIC NEUTRAL CABLE	121	96.8
WIRE, 1100 KCMIL TRIPLEXED, CLASS A, COMPACT ROUND ALUMINUM CONDUCTOR (61 STRAND), ETHYLENE PROPYLENE RUBBER (EPR) INSULATED, JACKETED CONCENTRIC NEUTRAL CABLE	0	0	WIRE, 1100 KCMIL TRIPLEXED, CLASS A, COMPACT ROUND ALUMINUM CONDUCTOR (61 STRAND), ETHYLENE PROPYLENE RUBBER (EPR) INSULATED, JACKETED CONCENTRIC NEUTRAL CABLE	0	0
WIRE, UG, 3/C, AL, 750 MCM TRIPLEXED	111	88.8	WIRE, UG, 3/C, AL, 750 MCM TRIPLEXED	111	88.8
WIRE, 1100 KCMIL TRIPLEXED, CLASS A, COMPACT ROUND ALUMINUM CONDUCTOR (61 STRAND), ETHYLENE PROPYLENE RUBBER (EPR) INSULATED, JACKETED CONCENTRIC NEUTRAL CABLE	77	61.6	WIRE, 1100 KCMIL TRIPLEXED, CLASS A, COMPACT ROUND ALUMINUM CONDUCTOR (61 STRAND), ETHYLENE PROPYLENE RUBBER (EPR) INSULATED, JACKETED CONCENTRIC NEUTRAL CABLE	77	61.6
WIRE, UG, 3/C, AL, 1000 MCM TRIPLEXED	165	132	WIRE, UG, 3/C, AL, 1000 MCM TRIPLEXED	165	132
WIRE, UG, 3/C, AL, 1000 MCM TRIPLEXED	219	175.2	WIRE, UG, 3/C, AL, 1000 MCM TRIPLEXED	219	175.2
WIRE, UG, 3/C, AL, 1000 MCM TRIPLEXED	56	44.8	WIRE, UG, 3/C, AL, 1000 MCM TRIPLEXED	56	44.8
WIRE, 1100 KCMIL TRIPLEXED, CLASS A, COMPACT ROUND ALUMINUM CONDUCTOR (61 STRAND), ETHYLENE PROPYLENE	259	207.2	WIRE, 1100 KCMIL TRIPLEXED, CLASS A, COMPACT ROUND ALUMINUM CONDUCTOR (61 STRAND), ETHYLENE PROPYLENE RUBBER	259	207.2

Attachment C: EMF Segment Map

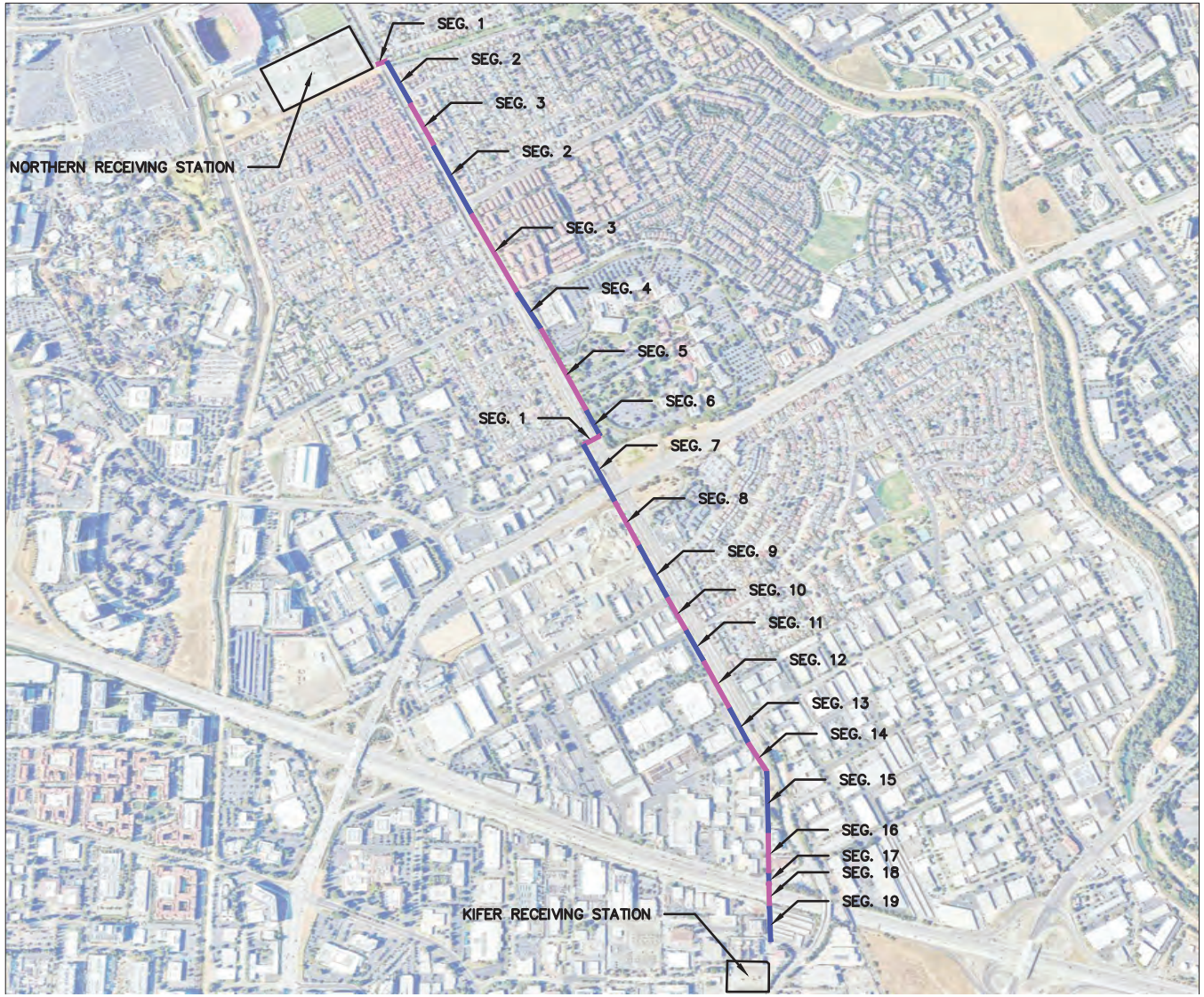

NORTH

"Engineering with Distinction"
ECI ELECTRICAL CONSULTANTS, INC.
BILLINGS, MONTANA

SILICON VALLEY POWER.
CITY OF SANTA CLARA

NRS-KRS 115 kV TRANSMISSION LINE

EMF SEGMENTS

DWG. NAME: EMF SEGMENT MAP

REV NO: A

Attachment D: EMF Calculation Tables

Table 1: Estimated Magnetic Field Data

Segment Number: 1

Configuration Description: Single circuit 115 kV transmission line.

	Existing 2024		Future 2028	
	Normal Load (A)	Peak Load (A)	Normal Load (A)	Peak Load (A)
Current (A)	See Figure-1	See Figure-1	See Figure-1	See Figure-1
Distance from Centerline (ft)	Magnetic Field (mG)	Magnetic Field (mG)	Magnetic Field (mG)	Magnetic Field (mG)
-60	0.0	0.0	16.0	20.0
-50	0.0	0.0	19.4	24.3
-40	0.0	0.0	23.3	29.2
-30	0.0	0.0	27.4	34.2
-20	0.0	0.0	31.1	38.8
-10	0.0	0.0	33.7	42.2
0	0.0	0.0	34.7	43.4
10	0.0	0.0	33.7	42.2
20	0.0	0.0	31.1	38.8
30	0.0	0.0	27.4	34.2
40	0.0	0.0	23.3	29.2
50	0.0	0.0	19.4	24.3
60	0.0	0.0	16.0	20.0

Notes:

1. See Figure-1 for conductor elevation and relative positioning to the proposed NRS-KRS transmission line.
2. "Peak Load" is defined as 100% of the estimated peak load as reported by SVP under typical system operations. "Normal Load" is defined as 80% of the estimated peak load.
3. The Magnetic Field Values are the estimated resultant RMS magnetic field at the specified distance from the centerline of the proposed NRS-KRS transmission line at a height of one meter above the ground. Magnetic Field Values are calculated using PLS-CADD's EMF calculator.
4. Negative values of the Distance from Centerline represent the distance to the left of the centerline when looking down the line towards the Kifer Receiving Station.

5. Magnetic Field Values are based on available information including load data, utility record data, site conditions, survey data, and proposed future configurations of new and existing power facilities. In some cases model configurations were created to be representative of multiple similar proposed installed configurations. In these cases, input values were selected so that the reported Magnetic Field Values would represent the highest expected field strength for the represented proposed installed configurations.

Table 2: Estimated Magnetic Field Data

Segment Number: 2

Configuration Description: Single circuit 115 kV transmission line with adjacent 12 kV overhead distribution line.

	Existing 2024		Future 2028	
	Normal Load (A)	Peak Load (A)	Normal Load (A)	Peak Load (A)
Current (A)	See Figure-2	See Figure-2	See Figure-2	See Figure-2
Distance from Centerline (ft)	Magnetic Field (mG)	Magnetic Field (mG)	Magnetic Field (mG)	Magnetic Field (mG)
-60	6.4	8.0	14.3	17.9
-50	9.2	11.5	19.4	24.2
-40	11.8	14.8	26.5	33.1
-30	11.8	14.8	31.3	39.1
-20	9.2	11.5	31.7	39.7
-10	6.4	8.0	31.3	39.2
0	4.4	5.5	31.1	38.9
10	3.1	3.9	30.4	38.0
20	2.3	2.9	28.6	35.7
30	1.7	2.2	25.8	32.2
40	1.3	1.7	22.5	28.1
50	1.0	1.3	19.2	24.0
60	0.8	1.0	16.1	20.1

Notes:

1. See Figure-2 for conductor elevation and relative positioning to the proposed NRS-KRS transmission line.
2. "Peak Load" is defined as 100% of the estimated peak load as reported by SVP under typical system operations. "Normal Load" is defined as 80% of the estimated peak load.
3. The Magnetic Field Values are the estimated resultant RMS magnetic field at the specified distance from the centerline of the proposed NRS-KRS transmission line at a height of one meter above the ground. Magnetic Field Values are calculated using PLS-CADD's EMF calculator.
4. Negative values of the Distance from Centerline represent the distance to the left of the centerline when looking down the line towards the Kifer Receiving Station.
5. Magnetic Field Values are based on available information including load data, utility record data, site conditions, survey data, and proposed future configurations of new and existing power facilities. In some cases model configurations were created to be representative of multiple similar proposed installed configurations. In these cases, input values were selected so that the reported Magnetic Field Values would represent the highest expected field strength for the represented proposed installed configurations.

Table 3: Estimated Magnetic Field Data

Segment Number: 3

Configuration Description: Single circuit 115 kV transmission line with adjacent 12 kV underground distribution line.

	Existing 2024		Future 2028	
	Normal Load (A)	Peak Load (A)	Normal Load (A)	Peak Load (A)
Current (A)	See Figure-3	See Figure-3	See Figure-3	See Figure-3
Distance from Centerline (ft)	Magnetic Field (mG)	Magnetic Field (mG)	Magnetic Field (mG)	Magnetic Field (mG)
-60	0.9	1.1	14.2	17.7
-50	2.6	3.3	17.9	22.3
-40	10.5	13.2	22.6	28.3
-30	4.6	5.8	20.3	25.4
-20	1.3	1.7	24.8	31.1
-10	0.6	0.7	27.2	34.0
0	0.3	0.4	28.5	35.6
10	0.2	0.2	28.5	35.6
20	0.1	0.1	27.1	33.9
30	0.1	0.1	24.6	30.8
40	0.1	0.1	21.6	27.0
50	0.0	0.1	18.5	23.1
60	0.0	0.0	15.5	19.4

Notes:

1. See Figure-3 for conductor elevation and relative positioning to the proposed NRS-KRS transmission line.
2. "Peak Load" is defined as 100% of the estimated peak load as reported by SVP under typical system operations. "Normal Load" is defined as 80% of the estimated peak load.
3. The Magnetic Field Values are the estimated resultant RMS magnetic field at the specified distance from the centerline of the proposed NRS-KRS transmission line at a height of one meter above the ground. Magnetic Field Values are calculated using PLS-CADD's EMF calculator.
4. Negative values of the Distance from Centerline represent the distance to the left of the centerline when looking down the line towards the Kifer Receiving Station.
5. Magnetic Field Values are based on available information including load data, utility record data, site conditions, survey data, and proposed future configurations of new and existing power facilities. In some cases model configurations were created to be representative of multiple similar proposed installed configurations. In these cases, input values were selected so that the reported Magnetic Field Values would represent the highest expected field strength for the represented proposed installed configurations.

Table 4: Estimated Magnetic Field Data

Segment Number: 4

Configuration Description: Single circuit 115 kV transmission line with four adjacent 12 kV underground distribution lines.

	Existing 2024		Future 2028	
	Normal Load (A)	Peak Load (A)	Normal Load (A)	Peak Load (A)
Current (A)	See Figure-4	See Figure-4	See Figure-4	See Figure-4
Distance from Centerline (ft)	Magnetic Field (mG)	Magnetic Field (mG)	Magnetic Field (mG)	Magnetic Field (mG)
-60	0.4	0.5	13.5	16.8
-50	0.7	0.9	16.6	20.7
-40	1.2	1.5	20.5	25.6
-30	2.6	3.2	25.6	32.0
-20	7.4	9.3	33.6	42.0
-10	18.4	22.9	18.3	22.9
0	14.0	17.5	18.5	23.1
10	6.4	8.0	36.5	45.7
20	2.3	2.9	33.7	42.1
30	1.1	1.4	29.9	37.4
40	0.7	0.8	25.9	32.4
50	0.4	0.5	21.9	27.4
60	0.3	0.4	18.2	22.8

Notes:

1. See Figure-4 for conductor elevation and relative positioning to the proposed NRS-KRS transmission line.
2. "Peak Load" is defined as 100% of the estimated peak load as reported by SVP under typical system operations. "Normal Load" is defined as 80% of the estimated peak load.
3. The Magnetic Field Values are the estimated resultant RMS magnetic field at the specified distance from the centerline of the proposed NRS-KRS transmission line at a height of one meter above the ground. Magnetic Field Values are calculated using PLS-CADD's EMF calculator.
4. Negative values of the Distance from Centerline represent the distance to the left of the centerline when looking down the line towards the Kifer Receiving Station.
5. Magnetic Field Values are based on available information including load data, utility record data, site conditions, survey data, and proposed future configurations of new and existing power facilities. In some cases model configurations were created to be representative of multiple similar proposed installed configurations. In these cases, input values were selected so that the reported Magnetic Field Values would represent the highest expected field strength for the represented proposed installed configurations.

Table 5: Estimated Magnetic Field Data

Segment Number: 5

Configuration Description: Single circuit 115 kV transmission line with underbuilt 60 kV transmission line and one adjacent 12 kV underground distribution line.

	Existing 2024		Future 2028	
	Normal Load (A)	Peak Load (A)	Normal Load (A)	Peak Load (A)
Current (A)	See Figure-5	See Figure-5	See Figure-5	See Figure-5
Distance from Centerline (ft)	Magnetic Field (mG)	Magnetic Field (mG)	Magnetic Field (mG)	Magnetic Field (mG)
-60	1.8	2.3	11.9	14.8
-50	2.4	3.0	14.2	17.8
-40	3.3	4.1	17.0	21.2
-30	4.6	5.7	20.2	25.2
-20	6.4	8.0	24.0	29.9
-10	8.8	11.0	27.6	34.5
0	6.9	8.6	27.5	34.4
10	9.2	11.5	30.1	37.6
20	8.0	9.9	27.9	34.9
30	6.3	7.8	24.7	30.9
40	4.7	5.9	21.3	26.6
50	3.5	4.4	18.2	22.7
60	2.6	3.2	15.4	19.2

Notes:

1. See Figure-5 for conductor elevation and relative positioning to the proposed NRS-KRS transmission line.
2. "Peak Load" is defined as 100% of the estimated peak load as reported by SVP under typical system operations. "Normal Load" is defined as 80% of the estimated peak load.
3. The Magnetic Field Values are the estimated resultant RMS magnetic field at the specified distance from the centerline of the proposed NRS-KRS transmission line at a height of one meter above the ground. Magnetic Field Values are calculated using PLS-CADD's EMF calculator.
4. Negative values of the Distance from Centerline represent the distance to the left of the centerline when looking down the line towards the Kifer Receiving Station.
5. Magnetic Field Values are based on available information including load data, utility record data, site conditions, survey data, and proposed future configurations of new and existing power facilities. In some cases model configurations were created to be representative of multiple similar proposed installed configurations. In these cases, input values were selected so that the reported Magnetic Field Values would represent the highest expected field strength for the represented proposed installed configurations.

Table 6: Estimated Magnetic Field Data

Segment Number: 6

Configuration Description: Single circuit 115 kV transmission line with underbuilt 60 kV transmission line and one adjacent 12 kV underground distribution line.

	Existing 2024		Future 2028	
	Normal Load (A)	Peak Load (A)	Normal Load (A)	Peak Load (A)
Current (A)	See Figure-6	See Figure-6	See Figure-6	See Figure-6
Distance from Centerline (ft)	Magnetic Field (mG)	Magnetic Field (mG)	Magnetic Field (mG)	Magnetic Field (mG)
-60	1.8	2.3	11.9	14.9
-50	2.4	3.1	14.2	17.8
-40	3.3	4.2	17.0	21.3
-30	4.6	5.8	20.3	25.4
-20	6.6	8.3	24.2	30.3
-10	9.6	11.9	28.0	35.0
0	6.4	8.0	26.8	33.5
10	9.5	11.9	30.3	37.8
20	8.1	10.1	28.0	35.0
30	6.3	7.9	24.7	30.9
40	4.7	5.9	21.3	26.7
50	3.5	4.4	18.2	22.7
60	2.6	3.2	15.4	19.2

Notes:

1. See Figure-6 for conductor elevation and relative positioning to the proposed NRS-KRS transmission line.
2. "Peak Load" is defined as 100% of the estimated peak load as reported by SVP under typical system operations. "Normal Load" is defined as 80% of the estimated peak load.
3. The Magnetic Field Values are the estimated resultant RMS magnetic field at the specified distance from the centerline of the proposed NRS-KRS transmission line at a height of one meter above the ground. Magnetic Field Values are calculated using PLS-CADD's EMF calculator.
4. Negative values of the Distance from Centerline represent the distance to the left of the centerline when looking down the line towards the Kifer Receiving Station.
5. Magnetic Field Values are based on available information including load data, utility record data, site conditions, survey data, and proposed future configurations of new and existing power facilities. In some cases model configurations were created to be representative of multiple similar proposed installed configurations. In these cases, input values were selected so that the reported Magnetic Field Values would represent the highest expected field strength for the represented proposed installed configurations.

Table 7: Estimated Magnetic Field Data

Segment Number: 7

Configuration Description: Single circuit 115 kV transmission line with underbuilt 60 kV transmission line and one adjacent 12 kV underground distribution line.

	Existing 2024		Future 2028	
	Normal Load (A)	Peak Load (A)	Normal Load (A)	Peak Load (A)
Current (A)	See Figure-7	See Figure-7	See Figure-7	See Figure-7
Distance from Centerline (ft)	Magnetic Field (mG)	Magnetic Field (mG)	Magnetic Field (mG)	Magnetic Field (mG)
-60	8.4	10.5	32.8	41.0
-50	10.7	13.4	41.6	52.0
-40	13.7	17.2	52.3	65.4
-30	17.6	22.0	64.1	80.1
-20	22.7	28.3	75.4	94.3
-10	20.0	25.0	75.1	93.9
0	27.7	34.6	82.3	102.9
10	28.0	35.0	76.6	95.7
20	25.7	32.1	66.7	83.3
30	22.0	27.5	55.3	69.1
40	17.9	22.4	44.5	55.6
50	14.3	17.8	35.2	44.0
60	11.2	14.0	27.7	34.6

Notes:

1. See Figure-7 for conductor elevation and relative positioning to the proposed NRS-KRS transmission line.
2. "Peak Load" is defined as 100% of the estimated peak load as reported by SVP under typical system operations. "Normal Load" is defined as 80% of the estimated peak load.
3. The Magnetic Field Values are the estimated resultant RMS magnetic field at the specified distance from the centerline of the proposed NRS-KRS transmission line at a height of one meter above the ground. Magnetic Field Values are calculated using PLS-CADD's EMF calculator.
4. Negative values of the Distance from Centerline represent the distance to the left of the centerline when looking down the line towards the Kifer Receiving Station.
5. Magnetic Field Values are based on available information including load data, utility record data, site conditions, survey data, and proposed future configurations of new and existing power facilities. In some cases model configurations were created to be representative of multiple similar proposed installed configurations. In these cases, input values were selected so that the reported Magnetic Field Values would represent the highest expected field strength for the represented proposed installed configurations.

Table 8: Estimated Magnetic Field Data

Segment Number: 8

Configuration Description: Single circuit 115 kV transmission line with underbuilt 60 kV transmission line and underbuilt 12 kV overhead distribution line.

	Existing 2024		Future 2028	
	Normal Load (A)	Peak Load (A)	Normal Load (A)	Peak Load (A)
Current (A)	See Figure-8	See Figure-8	See Figure-8	See Figure-8
Distance from Centerline (ft)	Magnetic Field (mG)	Magnetic Field (mG)	Magnetic Field (mG)	Magnetic Field (mG)
-60	7.8	9.8	22.5	28.1
-50	10.0	12.5	27.1	33.9
-40	12.7	15.9	32.3	40.4
-30	15.6	19.6	37.6	47.0
-20	18.3	22.9	42.0	52.6
-10	19.6	24.5	44.1	55.1
0	18.6	23.2	42.5	53.1
10	15.7	19.7	38.0	47.4
20	12.6	15.7	32.6	40.8
30	9.9	12.4	27.6	34.4
40	7.7	9.7	23.0	28.7
50	6.0	7.5	19.0	23.7
60	4.7	5.9	15.6	19.5

Notes:

1. See Figure-8 for conductor elevation and relative positioning to the proposed NRS-KRS transmission line.
2. "Peak Load" is defined as 100% of the estimated peak load as reported by SVP under typical system operations. "Normal Load" is defined as 80% of the estimated peak load.
3. The Magnetic Field Values are the estimated resultant RMS magnetic field at the specified distance from the centerline of the proposed NRS-KRS transmission line at a height of one meter above the ground. Magnetic Field Values are calculated using PLS-CADD's EMF calculator.
4. Negative values of the Distance from Centerline represent the distance to the left of the centerline when looking down the line towards the Kifer Receiving Station.
5. Magnetic Field Values are based on available information including load data, utility record data, site conditions, survey data, and proposed future configurations of new and existing power facilities. In some cases model configurations were created to be representative of multiple similar proposed installed configurations. In these cases, input values were selected so that the reported Magnetic Field Values would represent the highest expected field strength for the represented proposed installed configurations.

Table 9: Estimated Magnetic Field Data

Segment Number: 9

Configuration Description: Single circuit 115 kV transmission line with underbuilt 60 kV transmission line and underbuilt 12 kV overhead distribution line.

	Existing 2024		Future 2028	
	Normal Load (A)	Peak Load (A)	Normal Load (A)	Peak Load (A)
Current (A)	See Figure-9	See Figure-9	See Figure-9	See Figure-9
Distance from Centerline (ft)	Magnetic Field (mG)	Magnetic Field (mG)	Magnetic Field (mG)	Magnetic Field (mG)
-60	8.3	10.4	21.4	26.8
-50	11.0	13.7	26.1	32.6
-40	14.3	17.9	31.6	39.5
-30	18.3	22.8	37.6	47.1
-20	22.2	27.7	43.3	54.2
-10	24.4	30.5	46.5	58.1
0	23.2	29.0	44.7	55.9
10	19.3	24.1	39.1	48.9
20	15.2	18.9	33.0	41.2
30	11.7	14.7	27.5	34.3
40	9.0	11.2	22.7	28.3
50	6.9	8.6	18.6	23.3
60	5.3	6.6	15.3	19.1

Notes:

1. See Figure-9 for conductor elevation and relative positioning to the proposed NRS-KRS transmission line.
2. "Peak Load" is defined as 100% of the estimated peak load as reported by SVP under typical system operations. "Normal Load" is defined as 80% of the estimated peak load.
3. The Magnetic Field Values are the estimated resultant RMS magnetic field at the specified distance from the centerline of the proposed NRS-KRS transmission line at a height of one meter above the ground. Magnetic Field Values are calculated using PLS-CADD's EMF calculator.
4. Negative values of the Distance from Centerline represent the distance to the left of the centerline when looking down the line towards the Kifer Receiving Station.
5. Magnetic Field Values are based on available information including load data, utility record data, site conditions, survey data, and proposed future configurations of new and existing power facilities. In some cases model configurations were created to be representative of multiple similar proposed installed configurations. In these cases, input values were selected so that the reported Magnetic Field Values would represent the highest expected field strength for the represented proposed installed configurations.

Table 10: Estimated Magnetic Field Data

Segment Number: 10

Configuration Description: Single circuit 115 kV transmission line with underbuilt 12 kV overhead distribution line.

	Existing 2024		Future 2028	
	Normal Load (A)	Peak Load (A)	Normal Load (A)	Peak Load (A)
Current (A)	See Figure-10	See Figure-10	See Figure-10	See Figure-10
Distance from Centerline (ft)	Magnetic Field (mG)	Magnetic Field (mG)	Magnetic Field (mG)	Magnetic Field (mG)
-60	0.6	0.7	22.8	28.5
-50	0.7	0.9	28.5	35.7
-40	1.0	1.2	35.1	43.9
-30	1.3	1.7	41.9	52.4
-20	1.8	2.2	47.6	59.4
-10	2.2	2.8	50.5	63.1
0	2.5	3.1	49.9	62.4
10	2.2	2.8	45.9	57.4
20	1.8	2.2	39.6	49.5
30	1.3	1.7	32.6	40.7
40	1.0	1.2	26.2	32.7
50	0.7	0.9	20.7	25.9
60	0.6	0.7	16.4	20.5

Notes:

1. See Figure-10 for conductor elevation and relative positioning to the proposed NRS-KRS transmission line.
2. "Peak Load" is defined as 100% of the estimated peak load as reported by SVP under typical system operations. "Normal Load" is defined as 80% of the estimated peak load.
3. The Magnetic Field Values are the estimated resultant RMS magnetic field at the specified distance from the centerline of the proposed NRS-KRS transmission line at a height of one meter above the ground. Magnetic Field Values are calculated using PLS-CADD's EMF calculator.
4. Negative values of the Distance from Centerline represent the distance to the left of the centerline when looking down the line towards the Kifer Receiving Station.
5. Magnetic Field Values are based on available information including load data, utility record data, site conditions, survey data, and proposed future configurations of new and existing power facilities. In some cases model configurations were created to be representative of multiple similar proposed installed configurations. In these cases, input values were selected so that the reported Magnetic Field Values would represent the highest expected field strength for the represented proposed installed configurations.

Table 11: Estimated Magnetic Field Data

Segment Number: 11

Configuration Description: Single circuit 115 kV transmission line with adjacent 12 kV underground distribution line.

	Existing 2024		Future 2028	
	Normal Load (A)	Peak Load (A)	Normal Load (A)	Peak Load (A)
Current (A)	See Figure-11	See Figure-11	See Figure-11	See Figure-11
Distance from Centerline (ft)	Magnetic Field (mG)	Magnetic Field (mG)	Magnetic Field (mG)	Magnetic Field (mG)
-60	0.1	0.1	23.2	29.0
-50	0.1	0.1	29.1	36.4
-40	0.2	0.2	35.9	44.8
-30	0.3	0.4	42.7	53.4
-20	1.1	1.4	48.1	60.2
-10	3.6	4.5	55.3	69.1
0	1.1	1.4	49.8	62.3
10	0.3	0.4	45.3	56.6
20	0.2	0.2	38.7	48.4
30	0.1	0.1	31.8	39.7
40	0.1	0.1	25.5	31.8
50	0.0	0.0	20.2	25.3
60	0.0	0.0	16.0	20.0

Notes:

1. See Figure-11 for conductor elevation and relative positioning to the proposed NRS-KRS transmission line.
2. "Peak Load" is defined as 100% of the estimated peak load as reported by SVP under typical system operations. "Normal Load" is defined as 80% of the estimated peak load.
3. The Magnetic Field Values are the estimated resultant RMS magnetic field at the specified distance from the centerline of the proposed NRS-KRS transmission line at a height of one meter above the ground. Magnetic Field Values are calculated using PLS-CADD's EMF calculator.
4. Negative values of the Distance from Centerline represent the distance to the left of the centerline when looking down the line towards the Kifer Receiving Station.
5. Magnetic Field Values are based on available information including load data, utility record data, site conditions, survey data, and proposed future configurations of new and existing power facilities. In some cases model configurations were created to be representative of multiple similar proposed installed configurations. In these cases, input values were selected so that the reported Magnetic Field Values would represent the highest expected field strength for the represented proposed installed configurations.

Table 12: Estimated Magnetic Field Data

Segment Number: 12

Configuration Description: Single circuit 115 kV transmission line with two adjacent 12 kV underground distribution lines.

	Existing 2024		Future 2028	
	Normal Load (A)	Peak Load (A)	Normal Load (A)	Peak Load (A)
Current (A)	See Figure-12	See Figure-12	See Figure-12	See Figure-12
Distance from Centerline (ft)	Magnetic Field (mG)	Magnetic Field (mG)	Magnetic Field (mG)	Magnetic Field (mG)
-60	0.2	0.2	15.7	19.6
-50	0.3	0.3	18.5	23.1
-40	0.5	0.6	21.4	26.7
-30	0.9	1.2	24.3	30.4
-20	2.5	3.2	27.1	33.9
-10	7.1	8.9	22.8	28.5
0	8.4	10.6	25.2	31.5
10	2.2	2.8	26.1	32.7
20	0.9	1.1	22.8	28.5
30	0.4	0.5	19.7	24.7
40	0.3	0.3	16.8	21.0
50	0.2	0.2	14.2	17.7
60	0.1	0.1	11.8	14.8

Notes:

1. See Figure-12 for conductor elevation and relative positioning to the proposed NRS-KRS transmission line.
2. "Peak Load" is defined as 100% of the estimated peak load as reported by SVP under typical system operations. "Normal Load" is defined as 80% of the estimated peak load.
3. The Magnetic Field Values are the estimated resultant RMS magnetic field at the specified distance from the centerline of the proposed NRS-KRS transmission line at a height of one meter above the ground. Magnetic Field Values are calculated using PLS-CADD's EMF calculator.
4. Negative values of the Distance from Centerline represent the distance to the left of the centerline when looking down the line towards the Kifer Receiving Station.
5. Magnetic Field Values are based on available information including load data, utility record data, site conditions, survey data, and proposed future configurations of new and existing power facilities. In some cases model configurations were created to be representative of multiple similar proposed installed configurations. In these cases, input values were selected so that the reported Magnetic Field Values would represent the highest expected field strength for the represented proposed installed configurations.

Table 13: Estimated Magnetic Field Data

Segment Number: 13

Configuration Description: Single circuit 115 kV transmission line with adjacent 12 kV underground distribution line.

	Existing 2024		Future 2028	
	Normal Load (A)	Peak Load (A)	Normal Load (A)	Peak Load (A)
Current (A)	See Figure-13	See Figure-13	See Figure-13	See Figure-13
Distance from Centerline (ft)	Magnetic Field (mG)	Magnetic Field (mG)	Magnetic Field (mG)	Magnetic Field (mG)
-60	0.0	0.1	15.6	19.5
-50	0.1	0.1	18.3	22.9
-40	0.1	0.1	21.0	26.3
-30	0.2	0.3	23.6	29.4
-20	0.5	0.6	25.6	32.0
-10	2.0	2.5	25.9	32.4
0	2.6	3.3	24.9	31.1
10	0.6	0.8	24.7	30.9
20	0.2	0.3	22.2	27.7
30	0.1	0.2	19.4	24.3
40	0.1	0.1	16.7	20.9
50	0.0	0.1	14.1	17.6
60	0.0	0.0	11.8	14.7

Notes:

1. See Figure-13 for conductor elevation and relative positioning to the proposed NRS-KRS transmission line.
2. "Peak Load" is defined as 100% of the estimated peak load as reported by SVP under typical system operations. "Normal Load" is defined as 80% of the estimated peak load.
3. The Magnetic Field Values are the estimated resultant RMS magnetic field at the specified distance from the centerline of the proposed NRS-KRS transmission line at a height of one meter above the ground. Magnetic Field Values are calculated using PLS-CADD's EMF calculator.
4. Negative values of the Distance from Centerline represent the distance to the left of the centerline when looking down the line towards the Kifer Receiving Station.
5. Magnetic Field Values are based on available information including load data, utility record data, site conditions, survey data, and proposed future configurations of new and existing power facilities. In some cases model configurations were created to be representative of multiple similar proposed installed configurations. In these cases, input values were selected so that the reported Magnetic Field Values would represent the highest expected field strength for the represented proposed installed configurations.

Table 14: Estimated Magnetic Field Data

Segment Number: 14

Configuration Description: Single circuit 115 kV transmission line with two adjacent 12 kV underground distribution lines.

	Existing 2024		Future 2028	
	Normal Load (A)	Peak Load (A)	Normal Load (A)	Peak Load (A)
Current (A)	See Figure-14	See Figure-14	See Figure-14	See Figure-14
Distance from Centerline (ft)	Magnetic Field (mG)	Magnetic Field (mG)	Magnetic Field (mG)	Magnetic Field (mG)
-60	0.2	0.2	15.1	18.9
-50	0.3	0.3	17.7	22.2
-40	0.4	0.5	20.4	25.5
-30	0.8	1.0	23.0	28.8
-20	2.1	2.6	25.6	32.0
-10	8.2	10.2	24.9	31.1
0	9.8	12.3	23.9	29.9
10	2.4	3.0	25.1	31.3
20	0.9	1.2	21.8	27.3
30	0.5	0.6	18.9	23.7
40	0.3	0.3	16.2	20.3
50	0.2	0.2	13.7	17.1
60	0.1	0.1	11.5	14.4

Notes:

1. See Figure-14 for conductor elevation and relative positioning to the proposed NRS-KRS transmission line.
2. "Peak Load" is defined as 100% of the estimated peak load as reported by SVP under typical system operations. "Normal Load" is defined as 80% of the estimated peak load.
3. The Magnetic Field Values are the estimated resultant RMS magnetic field at the specified distance from the centerline of the proposed NRS-KRS transmission line at a height of one meter above the ground. Magnetic Field Values are calculated using PLS-CADD's EMF calculator.
4. Negative values of the Distance from Centerline represent the distance to the left of the centerline when looking down the line towards the Kifer Receiving Station.
5. Magnetic Field Values are based on available information including load data, utility record data, site conditions, survey data, and proposed future configurations of new and existing power facilities. In some cases model configurations were created to be representative of multiple similar proposed installed configurations. In these cases, input values were selected so that the reported Magnetic Field Values would represent the highest expected field strength for the represented proposed installed configurations.

Table 15: Estimated Magnetic Field Data

Segment Number: 15

Configuration Description: Single circuit 115 kV transmission line with adjacent 12 kV underground distribution line.

	Existing 2024		Future 2028	
	Normal Load (A)	Peak Load (A)	Normal Load (A)	Peak Load (A)
Current (A)	See Figure-15	See Figure-15	See Figure-15	See Figure-15
Distance from Centerline (ft)	Magnetic Field (mG)	Magnetic Field (mG)	Magnetic Field (mG)	Magnetic Field (mG)
-60	0.0	0.0	11.1	13.9
-50	0.0	0.0	13.2	16.5
-40	0.1	0.1	15.4	19.3
-30	0.1	0.1	17.8	22.2
-20	0.1	0.1	20.0	25.1
-10	0.2	0.2	21.9	27.4
0	0.2	0.3	23.2	29.0
10	0.5	0.6	23.7	29.6
20	1.0	1.3	23.2	29.0
30	3.2	4.0	21.2	26.6
40	10.6	13.2	12.2	15.2
50	3.2	4.0	19.7	24.7
60	1.0	1.3	15.4	19.3

Notes:

1. See Figure-15 for conductor elevation and relative positioning to the proposed NRS-KRS transmission line.
2. "Peak Load" is defined as 100% of the estimated peak load as reported by SVP under typical system operations. "Normal Load" is defined as 80% of the estimated peak load.
3. The Magnetic Field Values are the estimated resultant RMS magnetic field at the specified distance from the centerline of the proposed NRS-KRS transmission line at a height of one meter above the ground. Magnetic Field Values are calculated using PLS-CADD's EMF calculator.
4. Negative values of the Distance from Centerline represent the distance to the left of the centerline when looking down the line towards the Kifer Receiving Station.
5. Magnetic Field Values are based on available information including load data, utility record data, site conditions, survey data, and proposed future configurations of new and existing power facilities. In some cases model configurations were created to be representative of multiple similar proposed installed configurations. In these cases, input values were selected so that the reported Magnetic Field Values would represent the highest expected field strength for the represented proposed installed configurations.

Table 16: Estimated Magnetic Field Data

Segment Number: 16

Configuration Description: Single circuit 115 kV transmission line with adjacent 12 kV underground distribution line.

	Existing 2024		Future 2028	
	Normal Load (A)	Peak Load (A)	Normal Load (A)	Peak Load (A)
Current (A)	See Figure-16	See Figure-16	See Figure-16	See Figure-16
Distance from Centerline (ft)	Magnetic Field (mG)	Magnetic Field (mG)	Magnetic Field (mG)	Magnetic Field (mG)
-60	0.1	0.1	11.5	14.4
-50	0.2	0.2	13.7	17.2
-40	0.3	0.4	16.3	20.3
-30	0.6	0.8	19.1	23.9
-20	1.5	1.9	22.4	28.0
-10	5.8	7.2	25.1	31.4
0	7.7	9.6	20.5	25.7
10	1.9	2.4	25.8	32.3
20	0.7	0.9	24.5	30.6
30	0.4	0.4	22.5	28.2
40	0.2	0.3	20.2	25.2
50	0.1	0.2	17.6	22.0
60	0.1	0.1	15.1	18.8

Notes:

1. See Figure-16 for conductor elevation and relative positioning to the proposed NRS-KRS transmission line.
2. "Peak Load" is defined as 100% of the estimated peak load as reported by SVP under typical system operations. "Normal Load" is defined as 80% of the estimated peak load.
3. The Magnetic Field Values are the estimated resultant RMS magnetic field at the specified distance from the centerline of the proposed NRS-KRS transmission line at a height of one meter above the ground. Magnetic Field Values are calculated using PLS-CADD's EMF calculator.
4. Negative values of the Distance from Centerline represent the distance to the left of the centerline when looking down the line towards the Kifer Receiving Station.
5. Magnetic Field Values are based on available information including load data, utility record data, site conditions, survey data, and proposed future configurations of new and existing power facilities. In some cases model configurations were created to be representative of multiple similar proposed installed configurations. In these cases, input values were selected so that the reported Magnetic Field Values would represent the highest expected field strength for the represented proposed installed configurations.

Table 17: Estimated Magnetic Field Data

Segment Number: 17

Configuration Description: Single circuit 115 kV transmission line with two adjacent 12 kV underground distribution lines.

	Existing 2024		Future 2028	
	Normal Load (A)	Peak Load (A)	Normal Load (A)	Peak Load (A)
Current (A)	See Figure-17	See Figure-17	See Figure-17	See Figure-17
Distance from Centerline (ft)	Magnetic Field (mG)	Magnetic Field (mG)	Magnetic Field (mG)	Magnetic Field (mG)
-60	0.0	0.0	11.1	13.9
-50	0.1	0.1	13.2	16.5
-40	0.1	0.1	15.4	19.3
-30	0.1	0.1	17.8	22.3
-20	0.1	0.2	20.1	25.1
-10	0.2	0.3	22.0	27.5
0	0.3	0.4	23.3	29.1
10	0.6	0.8	23.8	29.7
20	1.3	1.7	23.5	29.3
30	4.2	5.2	21.4	26.8
40	14.2	17.7	10.6	13.3
50	4.3	5.4	20.8	26.0
60	1.4	1.7	15.8	19.7

Notes:

1. See Figure-17 for conductor elevation and relative positioning to the proposed NRS-KRS transmission line.
2. "Peak Load" is defined as 100% of the estimated peak load as reported by SVP under typical system operations. "Normal Load" is defined as 80% of the estimated peak load.
3. The Magnetic Field Values are the estimated resultant RMS magnetic field at the specified distance from the centerline of the proposed NRS-KRS transmission line at a height of one meter above the ground. Magnetic Field Values are calculated using PLS-CADD's EMF calculator.
4. Negative values of the Distance from Centerline represent the distance to the left of the centerline when looking down the line towards the Kifer Receiving Station.
5. Magnetic Field Values are based on available information including load data, utility record data, site conditions, survey data, and proposed future configurations of new and existing power facilities. In some cases model configurations were created to be representative of multiple similar proposed installed configurations. In these cases, input values were selected so that the reported Magnetic Field Values would represent the highest expected field strength for the represented proposed installed configurations.

Table 18: Estimated Magnetic Field Data

Segment Number: 18

Configuration Description: Single circuit 115 kV transmission line with underbuilt 60 kV transmission line.

	Existing 2024		Future 2028	
	Normal Load (A)	Peak Load (A)	Normal Load (A)	Peak Load (A)
Current (A)	See Figure-18	See Figure-18	See Figure-18	See Figure-18
Distance from Centerline (ft)	Magnetic Field (mG)	Magnetic Field (mG)	Magnetic Field (mG)	Magnetic Field (mG)
-60	3.4	4.2	15.6	19.4
-50	4.5	5.6	18.7	23.4
-40	6.0	7.4	22.4	28.1
-30	7.8	9.8	26.6	33.2
-20	9.9	12.4	30.9	38.6
-10	11.8	14.8	34.4	43.0
0	12.6	15.7	35.9	44.8
10	11.8	14.8	34.4	43.0
20	9.9	12.4	30.9	38.6
30	7.8	9.8	26.6	33.2
40	6.0	7.4	22.4	28.1
50	4.5	5.6	18.7	23.4
60	3.4	4.2	15.6	19.4

Notes:

1. See Figure-18 for conductor elevation and relative positioning to the proposed NRS-KRS transmission line.
2. "Peak Load" is defined as 100% of the estimated peak load as reported by SVP under typical system operations. "Normal Load" is defined as 80% of the estimated peak load.
3. The Magnetic Field Values are the estimated resultant RMS magnetic field at the specified distance from the centerline of the proposed NRS-KRS transmission line at a height of one meter above the ground. Magnetic Field Values are calculated using PLS-CADD's EMF calculator.
4. Negative values of the Distance from Centerline represent the distance to the left of the centerline when looking down the line towards the Kifer Receiving Station.
5. Magnetic Field Values are based on available information including load data, utility record data, site conditions, survey data, and proposed future configurations of new and existing power facilities. In some cases model configurations were created to be representative of multiple similar proposed installed configurations. In these cases, input values were selected so that the reported Magnetic Field Values would represent the highest expected field strength for the represented proposed installed configurations.

Table 19: Estimated Magnetic Field Data

Segment Number: 19

Configuration Description: Single circuit 115 kV transmission line with underbuilt 60 kV transmission line and three adjacent 12 kV underground distribution lines.

	Existing 2024		Future 2028	
	Normal Load (A)	Peak Load (A)	Normal Load (A)	Peak Load (A)
Current (A)	See Figure-19	See Figure-19	See Figure-19	See Figure-19
Distance from Centerline (ft)	Magnetic Field (mG)	Magnetic Field (mG)	Magnetic Field (mG)	Magnetic Field (mG)
-60	2.5	3.1	12.2	15.2
-50	3.3	4.1	14.6	18.2
-40	4.4	5.5	17.5	21.8
-30	5.9	7.4	20.8	26.0
-20	7.8	9.8	24.6	30.7
-10	9.9	12.4	28.4	35.5
0	11.6	14.5	31.2	39.0
10	12.0	15.0	31.9	39.8
20	10.9	13.6	30.2	37.7
30	7.6	9.6	25.6	32.0
40	21.4	26.8	13.1	16.3
50	12.5	15.6	26.2	32.8
60	5.3	6.6	18.0	22.5

Notes:

1. See Figure-19 for conductor elevation and relative positioning to the proposed NRS-KRS transmission line.
2. "Peak Load" is defined as 100% of the estimated peak load as reported by SVP under typical system operations. "Normal Load" is defined as 80% of the estimated peak load.
3. The Magnetic Field Values are the estimated resultant RMS magnetic field at the specified distance from the centerline of the proposed NRS-KRS transmission line at a height of one meter above the ground. Magnetic Field Values are calculated using PLS-CADD's EMF calculator.
4. Negative values of the Distance from Centerline represent the distance to the left of the centerline when looking down the line towards the Kifer Receiving Station.
5. Magnetic Field Values are based on available information including load data, utility record data, site conditions, survey data, and proposed future configurations of new and existing power facilities. In some cases model configurations were created to be representative of multiple similar proposed installed configurations. In these cases, input values were selected so that the reported Magnetic Field Values would represent the highest expected field strength for the represented proposed installed configurations.

Attachment E: EMF Figures

NRS-KRS, 115 kV Transmission	
715 kcmil 24/7 ACCR "Stilt", Bundled	
2024	Peak (A)
	-
	Normal (A)
	-
2028	Peak (A)
	1207
	Normal (A)
	965.6

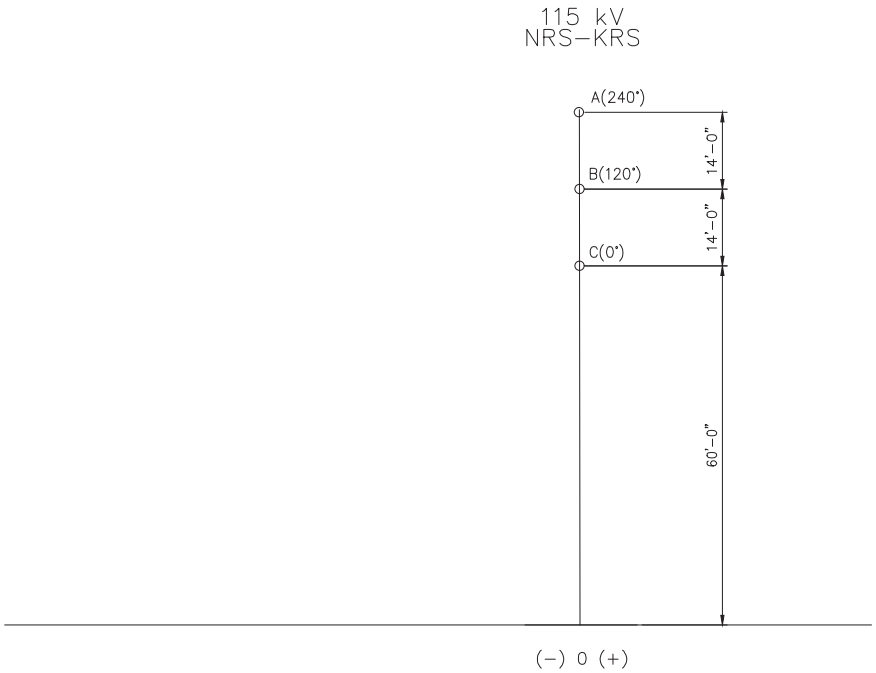

LOOKING SOUTH TOWARD KIFER RECEIVING STATION

NOTES:

1. THE DIMENSIONED HEIGHTS ABOVE GROUND ARE THE HEIGHTS ABOVE GROUND THAT ARE USED IN THE MAGNETIC FIELD STRENGTH CALCULATIONS. THESE DIMENSIONED HEIGHTS ARE REPRESENTATIVE OF THE MINIMUM EXISTING OR PROPOSED CONDUCTOR CLEARANCE IN THE SPECIFIED SEGMENT.

2. BUNDLED ACCR "STILT" CONDUCTOR HAS TWO SUB-CONDUCTORS SPACED VERTICALLY 12" APART. THE FINAL HEIGHT ABOVE GROUND FOR THIS CONDUCTOR IS 0'-6" LESS THAN THE DIMENSIONED HEIGHT.

"Engineering with Distinction"
ECI ELECTRICAL CONSULTANTS, INC.
BILLINGS, MONTANA

SILICON VALLEY POWER.
CITY OF SANTA CLARA

NRS-KRS 115 kV TRANSMISSION LINE

EMF FIGURES
FUTURE CROSS SECTION

DWG. NAME: FIGURE – 001 | REV NO: A

NRS-KRS, 115 kV Transmission 715 kcmil 24/7 ACCR "Stilt", Bundled	
2024	Peak (A) - Normal (A) -
2028	Peak (A) 1207 Normal (A) 985.6

204P, 12 kV Distribution 397.5 kcmil 19/0 AAC "Canna"	
2024	Peak (A) 219 Normal (A) 175.2
2028	Peak (A) 219 Normal (A) 175.2

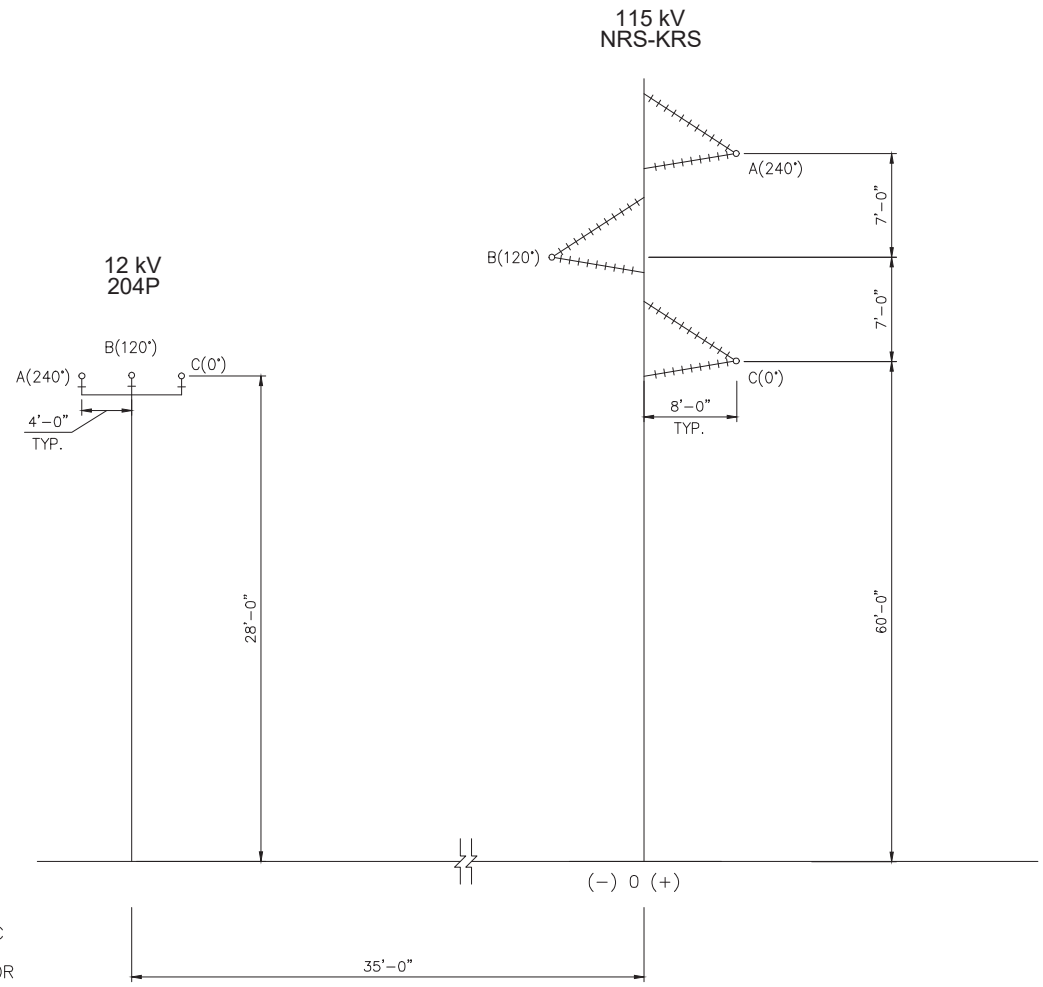

LOOKING SOUTH TOWARD KIFER RECEIVING STATION

NOTES:

1. THE DIMENSIONED HEIGHTS ABOVE GROUND ARE THE HEIGHTS ABOVE GROUND THAT ARE USED IN THE MAGNETIC FIELD STRENGTH CALCULATIONS. THESE DIMENSIONED HEIGHTS ARE REPRESENTATIVE OF THE MINIMUM EXISTING OR PROPOSED CONDUCTOR CLEARANCE IN THE SPECIFIED SEGMENT.

2. BUNDLED ACCR "STILT" CONDUCTOR HAS TWO SUB-CONDUCTORS SPACED VERTICALLY 12" APART. THE FINAL HEIGHT ABOVE GROUND FOR THIS CONDUCTOR IS 0'-6" LESS THAN THE DIMENSIONED HEIGHT.

"Engineering with Distinction"
ECI ELECTRICAL CONSULTANTS, INC.
BILLINGS, MONTANA

SILICON VALLEY POWER.
CITY OF SANTA CLARA

NRS-KRS 115 kV TRANSMISSION LINE

EMF FIGURES
FUTURE CROSS SECTION

DWG. NAME: FIGURE - 002 | REV NO: A

NRS-KRS, 115 kV Transmission 715 kcmil 24/7 ACCR "Stilt", Bundled	
2024	Peak (A) - Normal (A) -
2028	Peak (A) 1207 Normal (A) 965.6

204P, 12 kV Distribution 1000 MCM 3/C UG AL Triplexed	
2024	Peak (A) 219 Normal (A) 175.2
2028	Peak (A) 219 Normal (A) 175.2

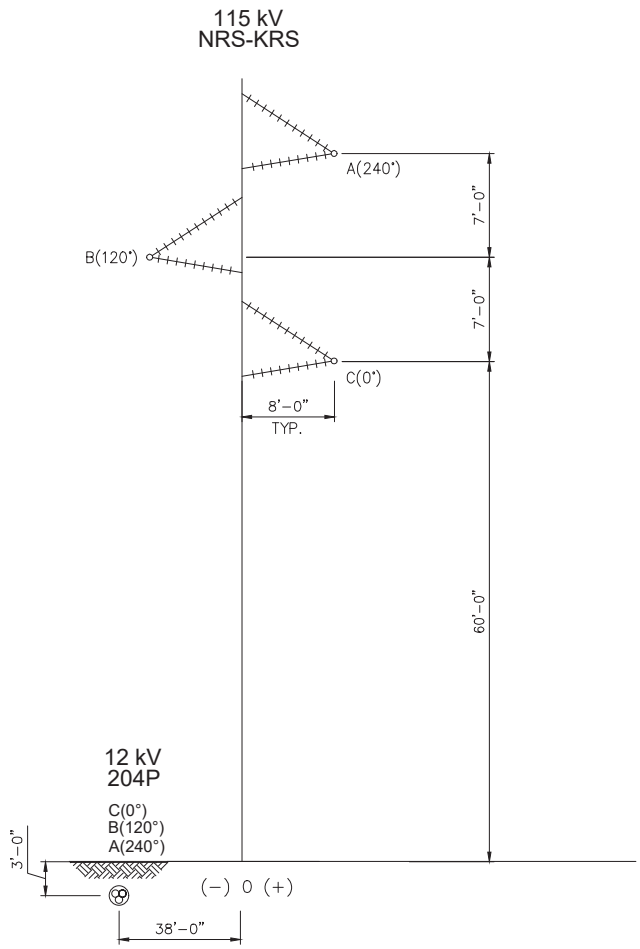

LOOKING SOUTH TOWARD KIFER RECEIVING STATION

NOTES:

1. THE DIMENSIONED HEIGHTS ABOVE GROUND ARE THE HEIGHTS ABOVE GROUND THAT ARE USED IN THE MAGNETIC FIELD STRENGTH CALCULATIONS. THESE DIMENSIONED HEIGHTS ARE REPRESENTATIVE OF THE MINIMUM EXISTING OR PROPOSED CONDUCTOR CLEARANCE IN THE SPECIFIED SEGMENT.

2. BUNDLED ACCR "STILT" CONDUCTOR HAS TWO SUB-CONDUCTORS SPACED VERTICALLY 12" APART. THE FINAL HEIGHT ABOVE GROUND FOR THIS CONDUCTOR IS 0'-6" LESS THAN THE DIMENSIONED HEIGHT.

"Engineering with Distinction"
ECI ELECTRICAL CONSULTANTS, INC.
BILLINGS, MONTANA

SILICON VALLEY POWER.
CITY OF SANTA CLARA

NRS-KRS 115 kV TRANSMISSION LINE

EMF FIGURES
FUTURE CROSS SECTION

DWG. NAME: FIGURE - 003 | REV NO: A

NRS-KRS, 115 kV Transmission 715 kcmil 24/7 ACCR "Stilt", Bundled	
2024	Peak (A) - Normal (A) -
2028	Peak (A) 1207 Normal (A) 965.6

104P, 12 kV Distribution 1100 kcmil UG AL EPR Triplexed	
2024	Peak (A) 121 Normal (A) 96.8
2028	Peak (A) 121 Normal (A) 96.8

202P, 12 kV Distribution 1100 kcmil UG AL EPR Triplexed	
2024	Peak (A) 77 Normal (A) 61.6
2028	Peak (A) 77 Normal (A) 61.6

204P, 12 kV Distribution 1000 MCM 3/C UG AL Triplexed	
2024	Peak (A) 219 Normal (A) 175.2
2028	Peak (A) 219 Normal (A) 175.2

207P, 12 kV Distribution 1100 kcmil UG AL EPR Triplexed	
2024	Peak (A) 259 Normal (A) 207.2
2028	Peak (A) 259 Normal (A) 207.2

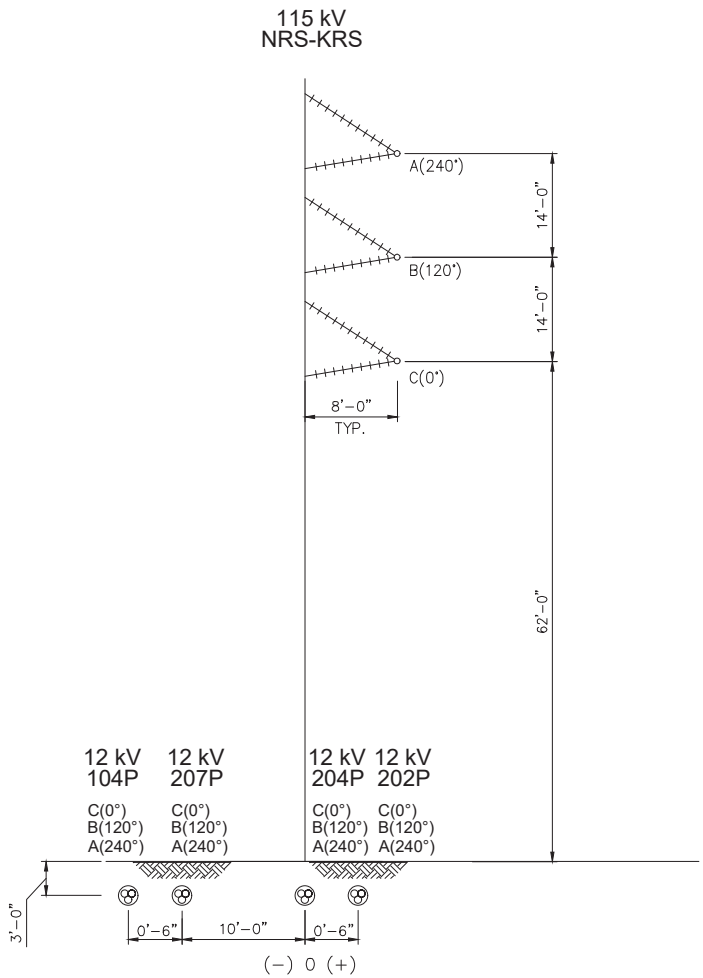

LOOKING SOUTH TOWARD KIFER RECEIVING STATION

NOTES:

1. THE DIMENSIONED HEIGHTS ABOVE GROUND ARE THE HEIGHTS ABOVE GROUND THAT ARE USED IN THE MAGNETIC FIELD STRENGTH CALCULATIONS. THESE DIMENSIONED HEIGHTS ARE REPRESENTATIVE OF THE MINIMUM EXISTING OR PROPOSED CONDUCTOR CLEARANCE IN THE SPECIFIED SEGMENT.

2. BUNDLED ACCR "STILT" CONDUCTOR HAS TWO SUB-CONDUCTORS SPACED VERTICALLY 12" APART. THE FINAL HEIGHT ABOVE GROUND FOR THIS CONDUCTOR IS 0'-6" LESS THAN THE DIMENSIONED HEIGHT.

"Engineering with Distinction"
ECI ELECTRICAL CONSULTANTS, INC.
BILLINGS, MONTANA

SILICON VALLEY POWER.
CITY OF SANTA CLARA

NRS-KRS 115 kV TRANSMISSION LINE

EMF FIGURES
FUTURE CROSS SECTION

DWG. NAME: FIGURE - 004
REV NO: A

NRS-KRS, 115 kV Transmission 715 kcmil 24/7 ACCR "Stilt", Bundled	
2024	Peak (A) - Normal (A) -
2028	Peak (A) 1207 Normal (A) 965.6

KRS-PLM, 60 kV Transmission 715 kcmil 24/7 ACCR "Stilt", Bundled	
2024	Peak (A) 242 Normal (A) 193.6
2028	Peak (A) 242 Normal (A) 193.6

202P, 12 kV Distribution 1100 kcmil UG AL EPR Triplexed	
2024	Peak (A) 77 Normal (A) 61.6
2028	Peak (A) 77 Normal (A) 61.6

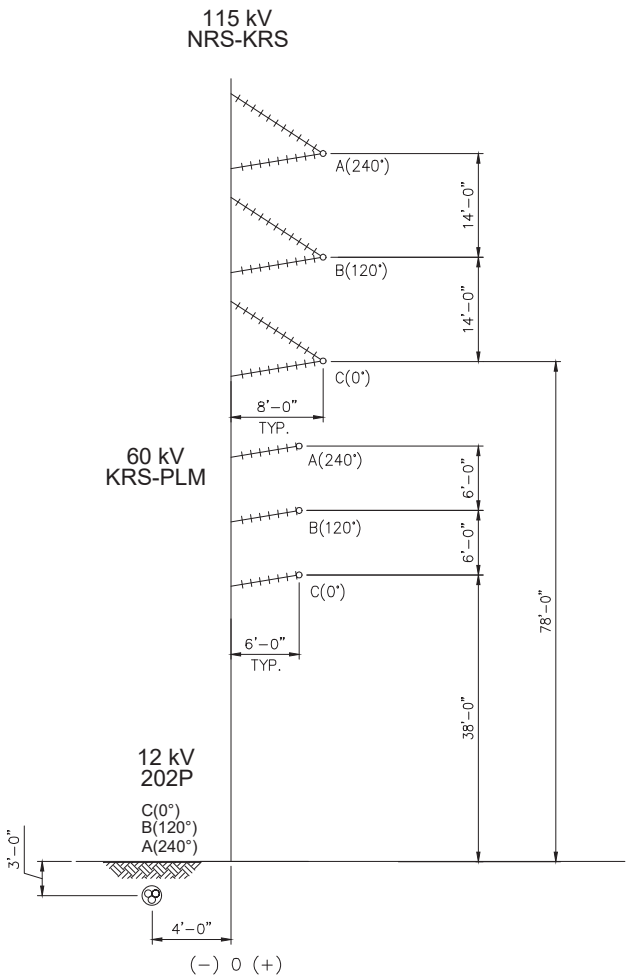

LOOKING SOUTH TOWARD KIFER RECEIVING STATION

NOTES:

1. THE DIMENSIONED HEIGHTS ABOVE GROUND ARE THE HEIGHTS ABOVE GROUND THAT ARE USED IN THE MAGNETIC FIELD STRENGTH CALCULATIONS. THESE DIMENSIONED HEIGHTS ARE REPRESENTATIVE OF THE MINIMUM EXISTING OR PROPOSED CONDUCTOR CLEARANCE IN THE SPECIFIED SEGMENT.

2. BUNDLED ACCR "STILT" CONDUCTOR HAS TWO SUB-CONDUCTORS SPACED VERTICALLY 12" APART. THE FINAL HEIGHT ABOVE GROUND FOR THIS CONDUCTOR IS 0'-6" LESS THAN THE DIMENSIONED HEIGHT.

"Engineering with Distinction"
ECI ELECTRICAL CONSULTANTS, INC.
BILLINGS, MONTANA

SILICON VALLEY POWER.
CITY OF SANTA CLARA

NRS-KRS 115 kV TRANSMISSION LINE

EMF FIGURES
FUTURE CROSS SECTION

DWG. NAME: FIGURE - 005 | REV NO: A

NRS-KRS, 115 kV Transmission 715 kcmil 24/7 ACCR "Stilt", Bundled	
2024	Peak (A) - Normal (A) -
2028	Peak (A) 1207 Normal (A) 965.6

KRS-PLM, 60 kV Transmission 715 kcmil 24/7 ACCR "Stilt", Bundled	
2024	Peak (A) 242 Normal (A) 193.6
2028	Peak (A) 242 Normal (A) 193.6

201A, 12 kV Distribution 750 MCM 3/C UG AL Triplexed	
2024	Peak (A) 111 Normal (A) 88.8
2028	Peak (A) 111 Normal (A) 88.8

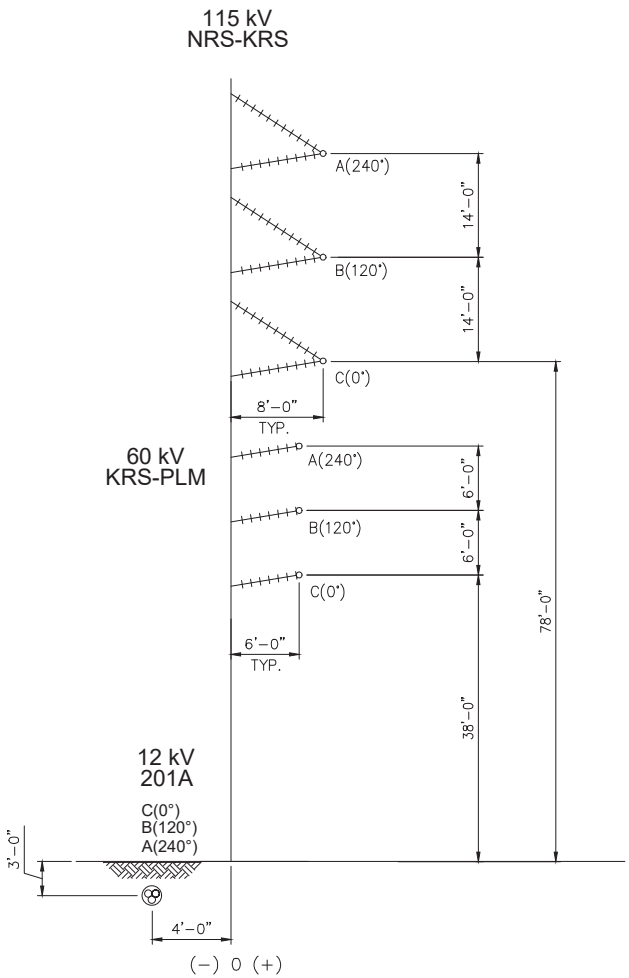

LOOKING SOUTH TOWARD KIFER RECEIVING STATION

NOTES:

1. THE DIMENSIONED HEIGHTS ABOVE GROUND ARE THE HEIGHTS ABOVE GROUND THAT ARE USED IN THE MAGNETIC FIELD STRENGTH CALCULATIONS. THESE DIMENSIONED HEIGHTS ARE REPRESENTATIVE OF THE MINIMUM EXISTING OR PROPOSED CONDUCTOR CLEARANCE IN THE SPECIFIED SEGMENT.

2. BUNDLED ACCR "STILT" CONDUCTOR HAS TWO SUB-CONDUCTORS SPACED VERTICALLY 12" APART. THE FINAL HEIGHT ABOVE GROUND FOR THIS CONDUCTOR IS 0'-6" LESS THAN THE DIMENSIONED HEIGHT.

"Engineering with Distinction"
ECI ELECTRICAL CONSULTANTS, INC.
BILLINGS, MONTANA

SILICON VALLEY POWER.
CITY OF SANTA CLARA

NRS-KRS 115 kV TRANSMISSION LINE

EMF FIGURES
FUTURE CROSS SECTION

DWG. NAME: FIGURE - 006 | REV NO: A

NRS-KRS, 115 kV Transmission 715 kcmil 24/7 ACCR "Stilt", Bundled	
2024	Peak (A) - Normal (A) -
2028	Peak (A) 1207 Normal (A) 965.6

PLM-NAJ, 60 kV Transmission 715 kcmil 24/7 ACCR "Stilt", Bundled	
2024	Peak (A) 578 Normal (A) 462.4
2028	Peak (A) 578 Normal (A) 462.4

201A, 12 kV Distribution 750 MCM 3/C UG AL Triplexed	
2024	Peak (A) 111 Normal (A) 88.8
2028	Peak (A) 111 Normal (A) 88.8

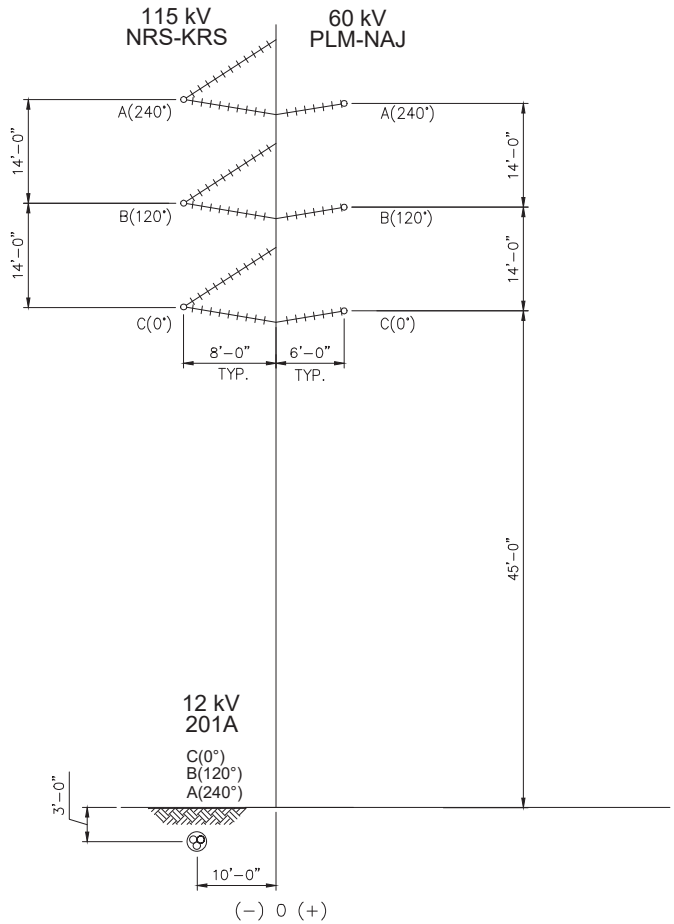

LOOKING SOUTH TOWARD KIFER RECEIVING STATION

NOTES:

1. THE DIMENSIONED HEIGHTS ABOVE GROUND ARE THE HEIGHTS ABOVE GROUND THAT ARE USED IN THE MAGNETIC FIELD STRENGTH CALCULATIONS. THESE DIMENSIONED HEIGHTS ARE REPRESENTATIVE OF THE MINIMUM EXISTING OR PROPOSED CONDUCTOR CLEARANCE IN THE SPECIFIED SEGMENT.

2. BUNDLED ACCR "STILT" CONDUCTOR HAS TWO SUB-CONDUCTORS SPACED VERTICALLY 12" APART. THE FINAL HEIGHT ABOVE GROUND FOR THIS CONDUCTOR IS 0'-6" LESS THAN THE DIMENSIONED HEIGHT.

"Engineering with Distinction"
ECI ELECTRICAL CONSULTANTS, INC.
BILLINGS, MONTANA

SILICON VALLEY POWER.
CITY OF SANTA CLARA

NRS-KRS 115 kV TRANSMISSION LINE

EMF FIGURES
FUTURE CROSS SECTION

DWG. NAME: FIGURE - 007
REV NO: A

NRS-KRS, 115 kV Transmission 715 kcmil 24/7 ACCR "Stilt", Bundled	
2024	Peak (A) - Normal (A) -
2028	Peak (A) 1207 Normal (A) 965.6

PLM-NAJ, 60 kV Transmission 715 kcmil 24/7 ACCR "Stilt", Bundled	
2024	Peak (A) 578 Normal (A) 462.4
2028	Peak (A) 578 Normal (A) 462.4

201A, 12 kV Distribution 397.5 kcmil 19/0 AAC "Canna"	
2024	Peak (A) 111 Normal (A) 88.8
2028	Peak (A) 111 Normal (A) 88.8

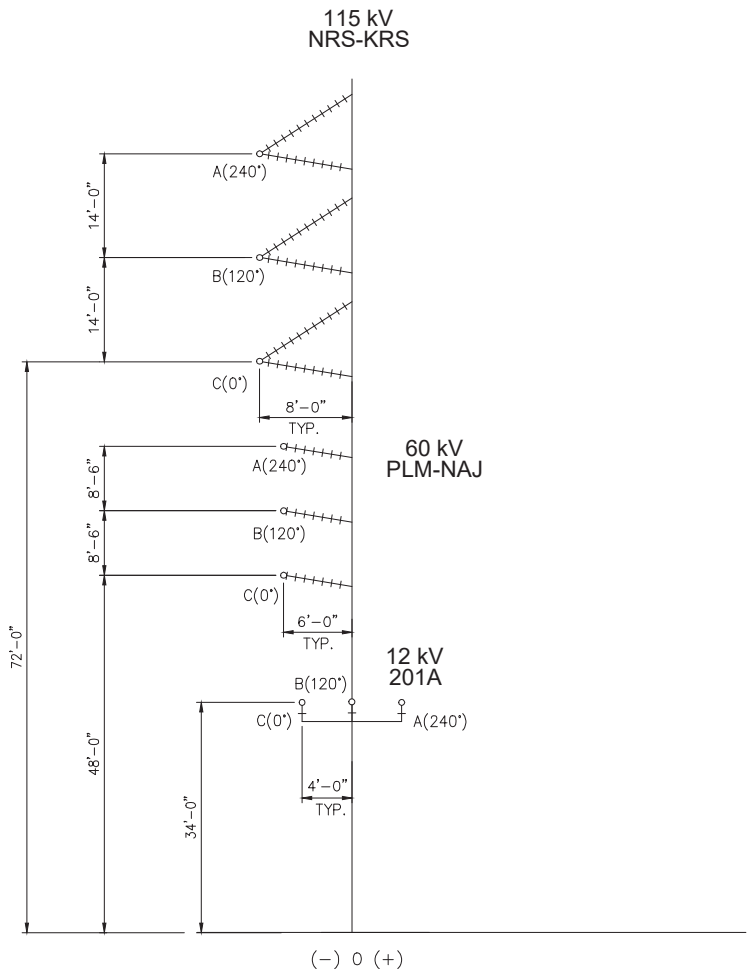

LOOKING SOUTH TOWARD KIFER RECEIVING STATION

NOTES:

1. THE DIMENSIONED HEIGHTS ABOVE GROUND ARE THE HEIGHTS ABOVE GROUND THAT ARE USED IN THE MAGNETIC FIELD STRENGTH CALCULATIONS. THESE DIMENSIONED HEIGHTS ARE REPRESENTATIVE OF THE MINIMUM EXISTING OR PROPOSED CONDUCTOR CLEARANCE IN THE SPECIFIED SEGMENT.

2. BUNDLED ACCR "STILT" CONDUCTOR HAS TWO SUB-CONDUCTORS SPACED VERTICALLY 12" APART. THE FINAL HEIGHT ABOVE GROUND FOR THIS CONDUCTOR IS 0'-6" LESS THAN THE DIMENSIONED HEIGHT.

"Engineering with Distinction"
ECI ELECTRICAL CONSULTANTS, INC.
BILLINGS, MONTANA

SILICON VALLEY POWER.
CITY OF SANTA CLARA

NRS-KRS 115 kV TRANSMISSION LINE

EMF FIGURES
FUTURE CROSS SECTION

DWG. NAME: FIGURE - 008 | REV NO: A

NRS-KRS, 115 kV Transmission 715 kcmil 24/7 ACCR "Stilt", Bundled	
2024	Peak (A) - Normal (A) -
2028	Peak (A) 1207 Normal (A) 965.6

PLM-NAJ, 60 kV Transmission 715 kcmil 24/7 ACCR "Stilt", Bundled	
2024	Peak (A) 578 Normal (A) 462.4
2028	Peak (A) 578 Normal (A) 462.4

102L, 12 kV Distribution 397.5 kcmil 19/0 AAC "Canna"	
2024	Peak (A) 69 Normal (A) 55.2
2028	Peak (A) 69 Normal (A) 55.2

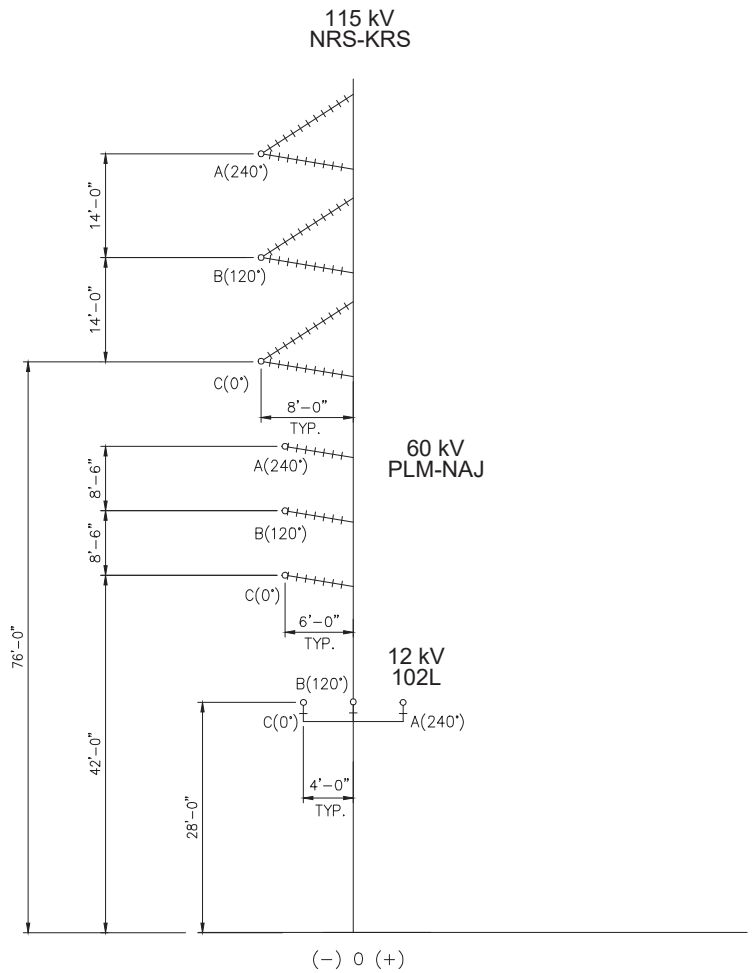

LOOKING SOUTH TOWARD KIFER RECEIVING STATION

NOTES:

1. THE DIMENSIONED HEIGHTS ABOVE GROUND ARE THE HEIGHTS ABOVE GROUND THAT ARE USED IN THE MAGNETIC FIELD STRENGTH CALCULATIONS. THESE DIMENSIONED HEIGHTS ARE REPRESENTATIVE OF THE MINIMUM EXISTING OR PROPOSED CONDUCTOR CLEARANCE IN THE SPECIFIED SEGMENT.

2. BUNDLED ACCR "STILT" CONDUCTOR HAS TWO SUB-CONDUCTORS SPACED VERTICALLY 12" APART. THE FINAL HEIGHT ABOVE GROUND FOR THIS CONDUCTOR IS 0'-6" LESS THAN THE DIMENSIONED HEIGHT.

"Engineering with Distinction"
ECI ELECTRICAL CONSULTANTS, INC.
BILLINGS, MONTANA

SILICON VALLEY POWER.
CITY OF SANTA CLARA

NRS-KRS 115 kV TRANSMISSION LINE

EMF FIGURES
FUTURE CROSS SECTION

DWG. NAME: FIGURE - 009 | REV NO: A

NRS-KRS, 115 kV Transmission 715 kcmil 24/7 ACCR "Stilt", Bundled	
2024	Peak (A) - Normal (A) -
2028	Peak (A) 1207 Normal (A) 965.6

102L, 12 kV Distribution 397.5 kcmil 19/0 AAC "Canna"	
2024	Peak (A) 69 Normal (A) 55.2
2028	Peak (A) 69 Normal (A) 55.2

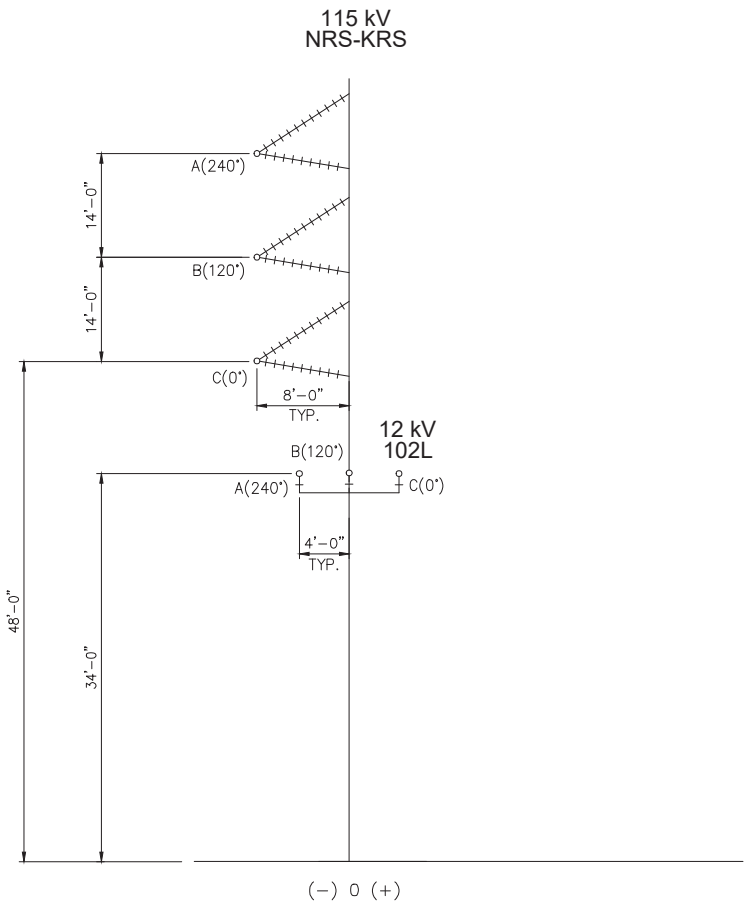

LOOKING SOUTH TOWARD KIFER RECEIVING STATION

NOTES:

1. THE DIMENSIONED HEIGHTS ABOVE GROUND ARE THE HEIGHTS ABOVE GROUND THAT ARE USED IN THE MAGNETIC FIELD STRENGTH CALCULATIONS. THESE DIMENSIONED HEIGHTS ARE REPRESENTATIVE OF THE MINIMUM EXISTING OR PROPOSED CONDUCTOR CLEARANCE IN THE SPECIFIED SEGMENT.

2. BUNDLED ACCR "STILT" CONDUCTOR HAS TWO SUB-CONDUCTORS SPACED VERTICALLY 12" APART. THE FINAL HEIGHT ABOVE GROUND FOR THIS CONDUCTOR IS 0'-6" LESS THAN THE DIMENSIONED HEIGHT.

"Engineering with Distinction"
ECI ELECTRICAL CONSULTANTS, INC.
BILLINGS, MONTANA

SILICON VALLEY POWER.
CITY OF SANTA CLARA

NRS-KRS 115 kV TRANSMISSION LINE

EMF FIGURES
FUTURE CROSS SECTION

DWG. NAME: FIGURE - 010 | REV NO: A

NRS-KRS, 115 kV Transmission 715 kcmil 24/7 ACCR "Stilt", Bundled	
2024	Peak (A) - Normal (A) -
2028	Peak (A) 1207 Normal (A) 985.6

102L, 12 kV Distribution 750 MCM 3/C UG Al, Triplexed	
2024	Peak (A) 69 Normal (A) 55.2
2028	Peak (A) 69 Normal (A) 55.2

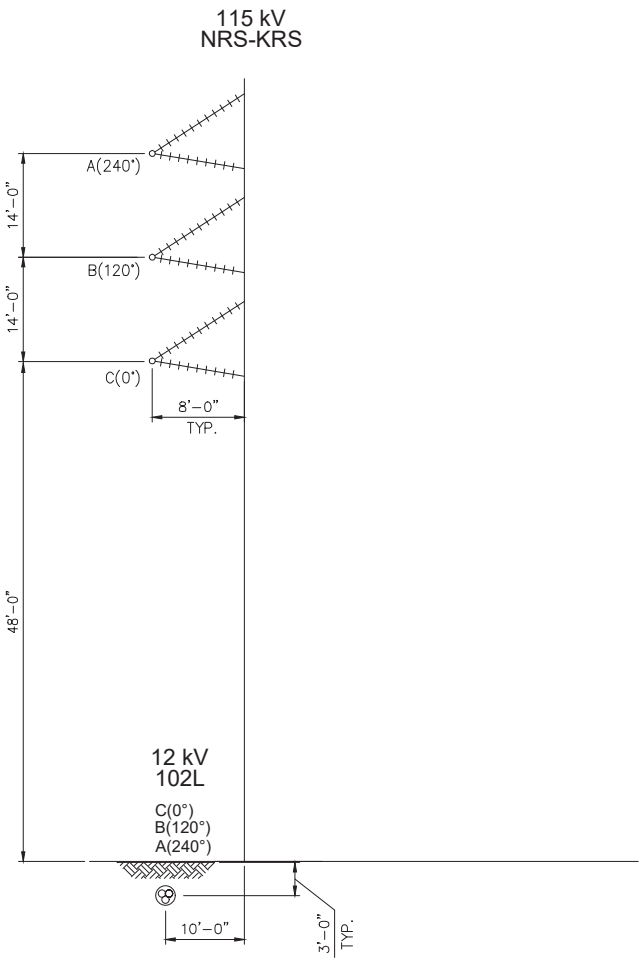

(-) 0 (+)

LOOKING SOUTH TOWARD KIFER RECEIVING STATION

NOTES:

1. THE DIMENSIONED HEIGHTS ABOVE GROUND ARE THE HEIGHTS ABOVE GROUND THAT ARE USED IN THE MAGNETIC FIELD STRENGTH CALCULATIONS. THESE DIMENSIONED HEIGHTS ARE REPRESENTATIVE OF THE MINIMUM EXISTING OR PROPOSED CONDUCTOR CLEARANCE IN THE SPECIFIED SEGMENT.

2. BUNDLED ACCR "STILT" CONDUCTOR HAS TWO SUB-CONDUCTORS SPACED VERTICALLY 12" APART. THE FINAL HEIGHT ABOVE GROUND FOR THIS CONDUCTOR IS 0'-6" LESS THAN THE DIMENSIONED HEIGHT.

"Engineering with Distinction"
ECI ELECTRICAL CONSULTANTS, INC.
BILLINGS, MONTANA

SILICON VALLEY POWER.
CITY OF SANTA CLARA

NRS-KRS 115 kV TRANSMISSION LINE

EMF FIGURES
FUTURE CROSS SECTION

DWG. NAME: FIGURE – 011 | REV NO: A

NRS-KRS, 115 kV Transmission 715 kcmil 24/7 ACCR "Stilt", Bundled	
2024	Peak (A) - Normal (A) -
2028	Peak (A) 1207 Normal (A) 965.6

102L, 12 kV Distribution 750 MCM 3/C UG AL Triplexed	
2024	Peak (A) 69 Normal (A) 55.2
2028	Peak (A) 69 Normal (A) 55.2

301L, 12 kV Distribution 1000 MCM 3/C UG AL Triplexed	
2024	Peak (A) 201 Normal (A) 160.8
2028	Peak (A) 201 Normal (A) 160.8

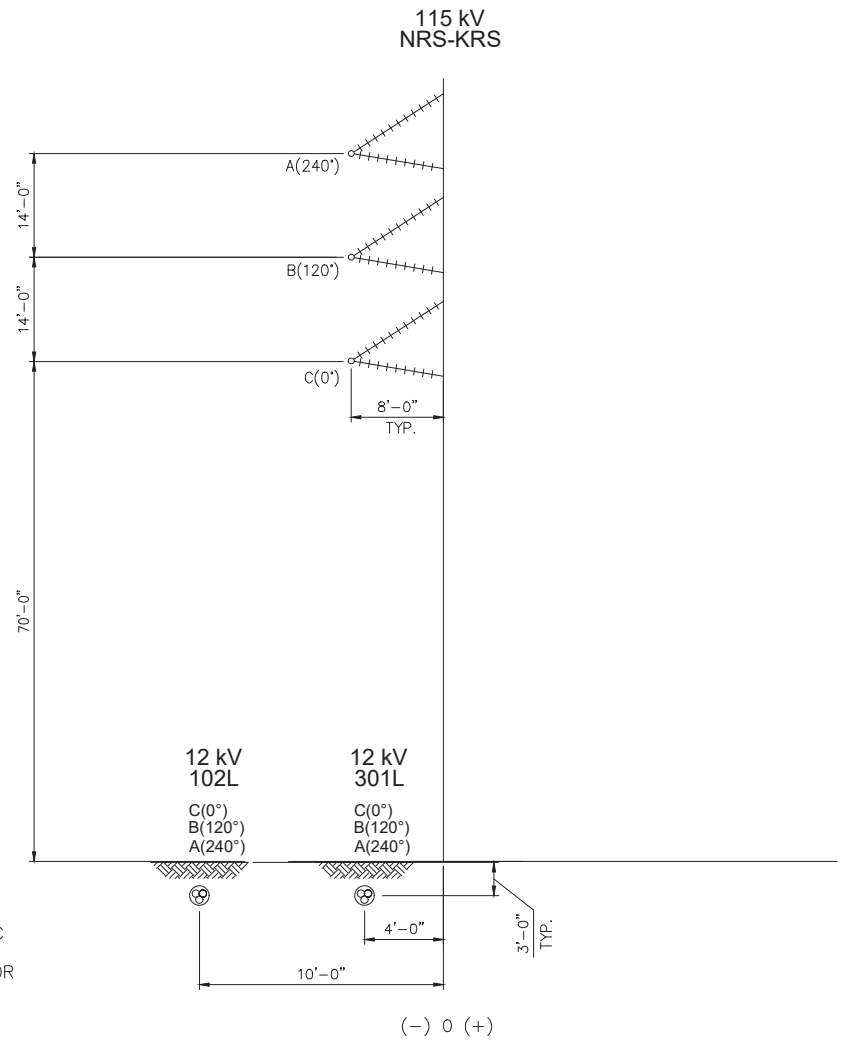

LOOKING SOUTH TOWARD KIFER RECEIVING STATION

NOTES:

1. THE DIMENSIONED HEIGHTS ABOVE GROUND ARE THE HEIGHTS ABOVE GROUND THAT ARE USED IN THE MAGNETIC FIELD STRENGTH CALCULATIONS. THESE DIMENSIONED HEIGHTS ARE REPRESENTATIVE OF THE MINIMUM EXISTING OR PROPOSED CONDUCTOR CLEARANCE IN THE SPECIFIED SEGMENT.

2. BUNDLED ACCR "STILT" CONDUCTOR HAS TWO SUB-CONDUCTORS SPACED VERTICALLY 12" APART. THE FINAL HEIGHT ABOVE GROUND FOR THIS CONDUCTOR IS 0'-6" LESS THAN THE DIMENSIONED HEIGHT.

"Engineering with Distinction"
ECI ELECTRICAL CONSULTANTS, INC.
BILLINGS, MONTANA

SILICON VALLEY POWER.
CITY OF SANTA CLARA

NRS-KRS 115 kV TRANSMISSION LINE

EMF FIGURES
FUTURE CROSS SECTION

DWG. NAME: FIGURE - 012 | REV NO: A

NRS-KRS, 115 kV Transmission 715 kcmil 24/7 ACCR "Stilt", Bundled	
2024	Peak (A) - Normal (A) -
2028	Peak (A) 1207 Normal (A) 965.6

102L, 12 kV Distribution 750 MCM 3/C UG AL Triplexed	
2024	Peak (A) 69 Normal (A) 55.2
2028	Peak (A) 69 Normal (A) 55.2

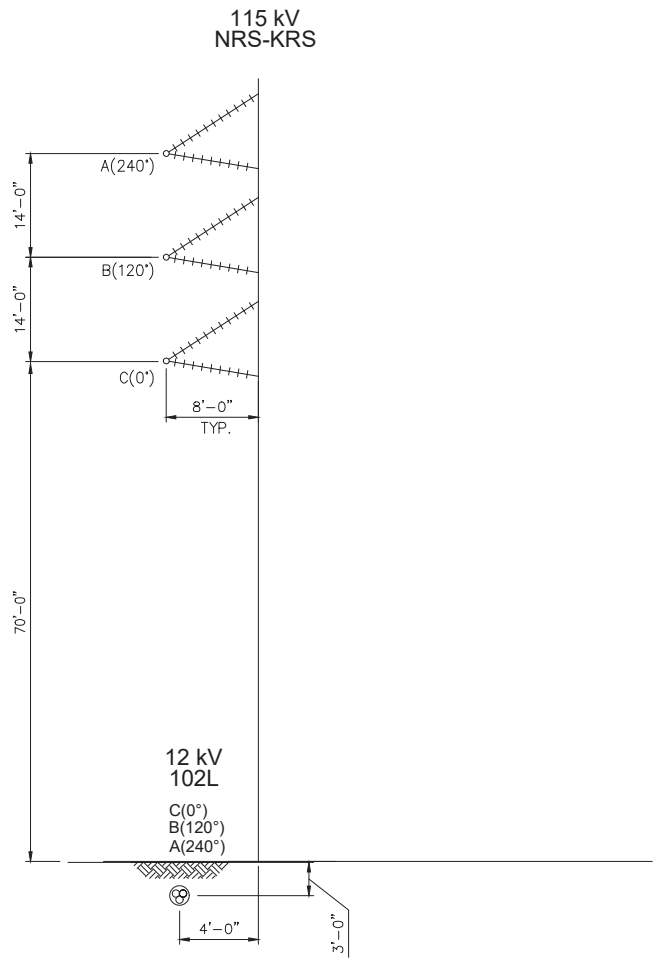

(-) 0 (+)

LOOKING SOUTH TOWARD KIFER RECEIVING STATION

NOTES:

1. THE DIMENSIONED HEIGHTS ABOVE GROUND ARE THE HEIGHTS ABOVE GROUND THAT ARE USED IN THE MAGNETIC FIELD STRENGTH CALCULATIONS. THESE DIMENSIONED HEIGHTS ARE REPRESENTATIVE OF THE MINIMUM EXISTING OR PROPOSED CONDUCTOR CLEARANCE IN THE SPECIFIED SEGMENT.

2. BUNDLED ACCR "STILT" CONDUCTOR HAS TWO SUB-CONDUCTORS SPACED VERTICALLY 12" APART. THE FINAL HEIGHT ABOVE GROUND FOR THIS CONDUCTOR IS 0'-6" LESS THAN THE DIMENSIONED HEIGHT.

"Engineering with Distinction"
ECI ELECTRICAL CONSULTANTS, INC.
BILLINGS, MONTANA

SILICON VALLEY POWER.
CITY OF SANTA CLARA

NRS-KRS 115 kV TRANSMISSION LINE

EMF FIGURES
FUTURE CROSS SECTION

DWG. NAME: FIGURE - 013 | REV NO: A

NRS-KRS, 115 kV Transmission 715 kcmil 24/7 ACCR "Stilt", Bundled	
2024	Peak (A) - Normal (A) -
2028	Peak (A) 1207 Normal (A) 965.6

102L, 12 kV Distribution 750 MCM 3/C UG AL Triplexed	
2024	Peak (A) 69 Normal (A) 55.2
2028	Peak (A) 69 Normal (A) 55.2

301L, 12 kV Distribution 1000 MCM 3/C UG AL Triplexed	
2024	Peak (A) 201 Normal (A) 160.8
2028	Peak (A) 201 Normal (A) 160.8

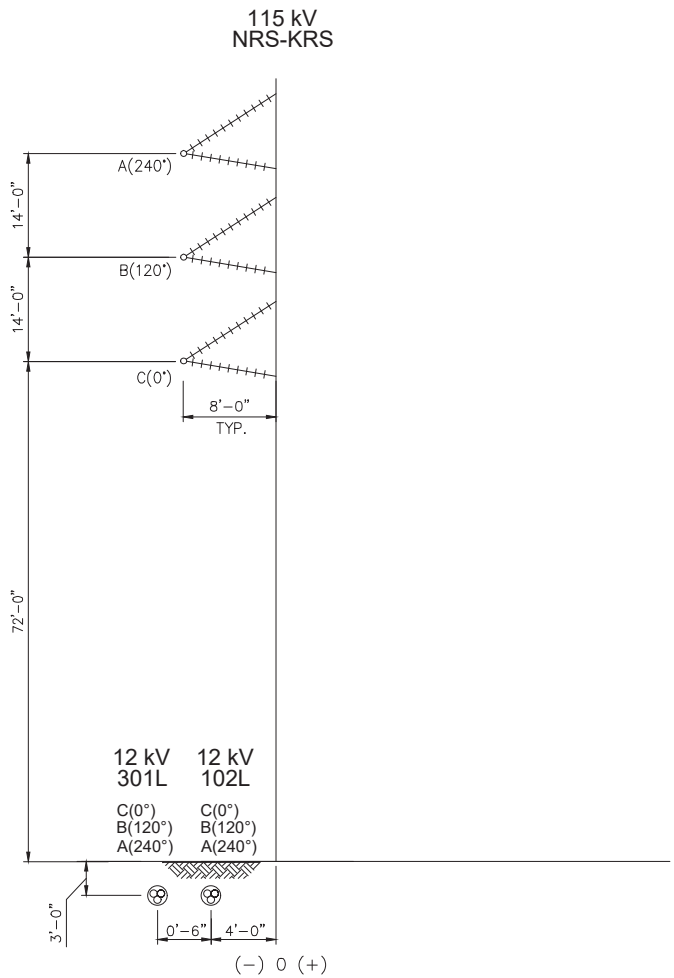

LOOKING SOUTH TOWARD KIFER RECEIVING STATION

NOTES:

1. THE DIMENSIONED HEIGHTS ABOVE GROUND ARE THE HEIGHTS ABOVE GROUND THAT ARE USED IN THE MAGNETIC FIELD STRENGTH CALCULATIONS. THESE DIMENSIONED HEIGHTS ARE REPRESENTATIVE OF THE MINIMUM EXISTING OR PROPOSED CONDUCTOR CLEARANCE IN THE SPECIFIED SEGMENT.

2. BUNDLED ACCR "STILT" CONDUCTOR HAS TWO SUB-CONDUCTORS SPACED VERTICALLY 12" APART. THE FINAL HEIGHT ABOVE GROUND FOR THIS CONDUCTOR IS 0'-6" LESS THAN THE DIMENSIONED HEIGHT.

"Engineering with Distinction"
ECI ELECTRICAL CONSULTANTS, INC.
BILLINGS, MONTANA

SILICON VALLEY POWER.
CITY OF SANTA CLARA

NRS-KRS 115 kV TRANSMISSION LINE

EMF FIGURES
FUTURE CROSS SECTION

DWG. NAME: FIGURE - 014
REV NO: A

NRS-KRS, 115 kV Transmission 715 kcmil 24/7 ACCR "Stilt", Bundled	
2024	Peak (A) - Normal (A) -
2028	Peak (A) 1207 Normal (A) 965.6

301L, 12 kV Distribution 1000 MCM 3/C UG AL Triplexed	
2024	Peak (A) 201 Normal (A) 160.8
2028	Peak (A) 201 Normal (A) 160.8

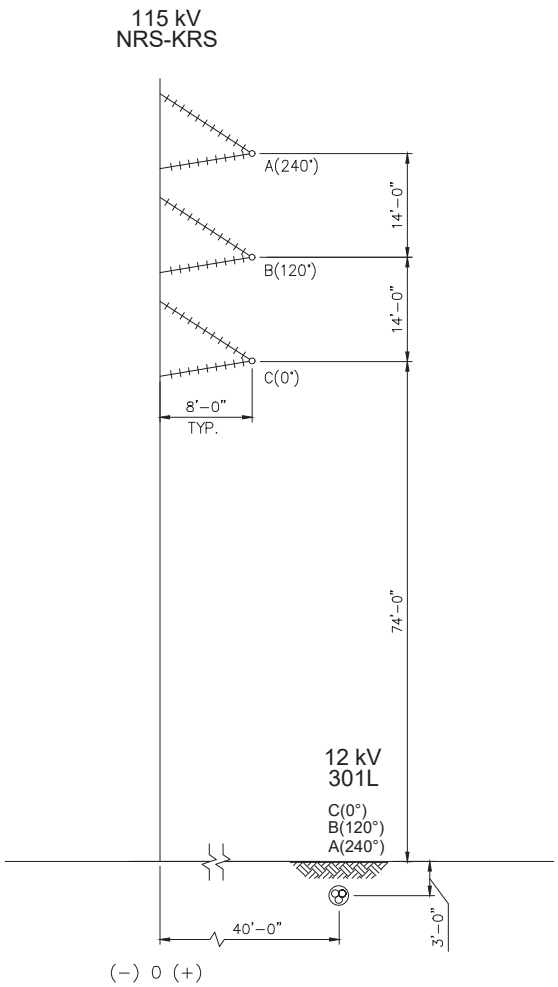

LOOKING SOUTH TOWARD KIFER RECEIVING STATION

NOTES:

1. THE DIMENSIONED HEIGHTS ABOVE GROUND ARE THE HEIGHTS ABOVE GROUND THAT ARE USED IN THE MAGNETIC FIELD STRENGTH CALCULATIONS. THESE DIMENSIONED HEIGHTS ARE REPRESENTATIVE OF THE MINIMUM EXISTING OR PROPOSED CONDUCTOR CLEARANCE IN THE SPECIFIED SEGMENT.

2. BUNDLED ACCR "STILT" CONDUCTOR HAS TWO SUB-CONDUCTORS SPACED VERTICALLY 12" APART. THE FINAL HEIGHT ABOVE GROUND FOR THIS CONDUCTOR IS 0'-6" LESS THAN THE DIMENSIONED HEIGHT.

"Engineering with Distinction"
ECI ELECTRICAL CONSULTANTS, INC.
BILLINGS, MONTANA

SILICON VALLEY POWER.
CITY OF SANTA CLARA

NRS-KRS 115 kV TRANSMISSION LINE

EMF FIGURES
FUTURE CROSS SECTION

DWG. NAME: FIGURE - 015 | REV NO: A

NRS-KRS, 115 kV Transmission 715 kcmil 24/7 ACCR "Stilt", Bundled	
2024	Peak (A) - Normal (A) -
2028	Peak (A) 1207 Normal (A) 965.6

301L, 12 kV Distribution 1000 MCM 3/C UG Al. Triplexed	
2024	Peak (A) 201 Normal (A) 160.8
2028	Peak (A) 201 Normal (A) 160.8

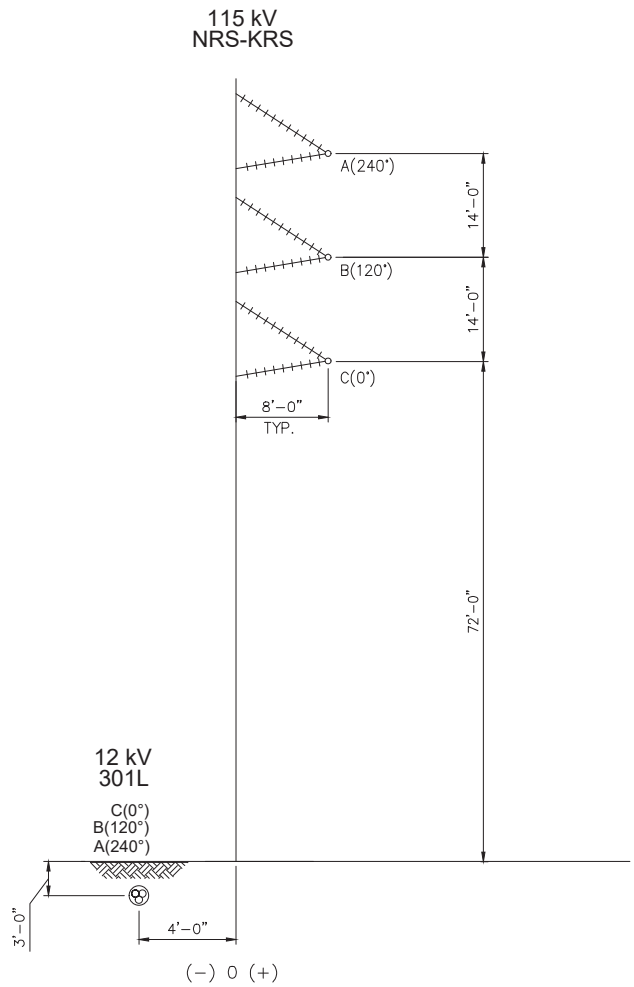

LOOKING SOUTH TOWARD KIFER RECEIVING STATION

NOTES:

1. THE DIMENSIONED HEIGHTS ABOVE GROUND ARE THE HEIGHTS ABOVE GROUND THAT ARE USED IN THE MAGNETIC FIELD STRENGTH CALCULATIONS. THESE DIMENSIONED HEIGHTS ARE REPRESENTATIVE OF THE MINIMUM EXISTING OR PROPOSED CONDUCTOR CLEARANCE IN THE SPECIFIED SEGMENT.

2. BUNDLED ACCR "STILT" CONDUCTOR HAS TWO SUB-CONDUCTORS SPACED VERTICALLY 12" APART. THE FINAL HEIGHT ABOVE GROUND FOR THIS CONDUCTOR IS 0'-6" LESS THAN THE DIMENSIONED HEIGHT.

"Engineering with Distinction"
ECI ELECTRICAL CONSULTANTS, INC.
BILLINGS, MONTANA

SILICON VALLEY POWER.
CITY OF SANTA CLARA

NRS-KRS 115 kV TRANSMISSION LINE

EMF FIGURES
FUTURE CROSS SECTION

DWG. NAME: FIGURE – 016 | REV NO: A

NRS-KRS, 115 kV Transmission	
715 kcmil 24/7 ACCR "Stilt", Bundled	
2024	Peak (A) - Normal (A) -
2028	Peak (A) 1207 Normal (A) 965.6

301L, 12 kV Distribution	
1000 MCM 3/C UG AL Triplexed	
2024	Peak (A) 201 Normal (A) 160.8
2028	Peak (A) 201 Normal (A) 160.8

102L, 12 kV Distribution	
750 MCM 3/C UG AL Triplexed	
2024	Peak (A) 69 Normal (A) 55.2
2028	Peak (A) 69 Normal (A) 55.2

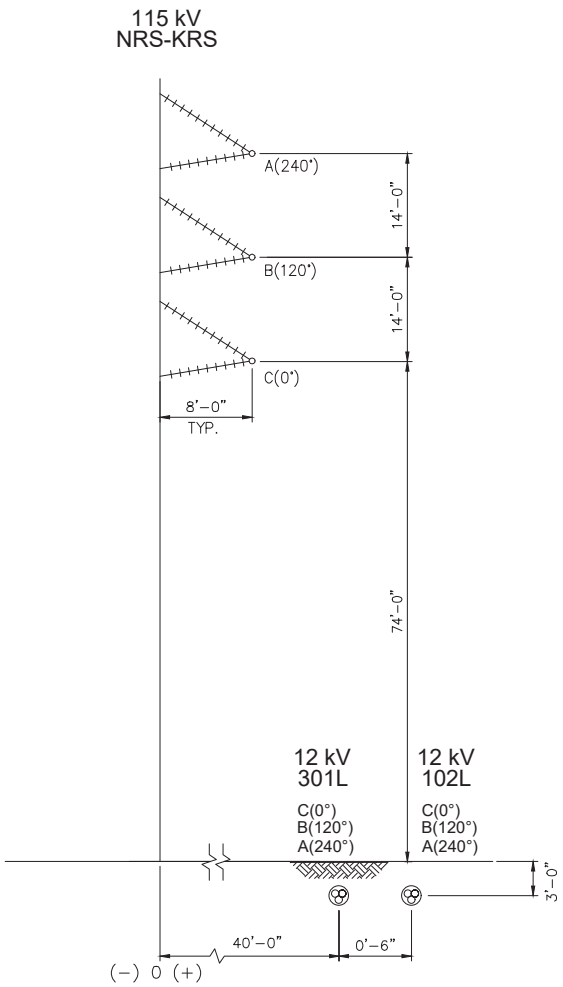

LOOKING SOUTH TOWARD KIFER RECEIVING STATION

NOTES:

1. THE DIMENSIONED HEIGHTS ABOVE GROUND ARE THE HEIGHTS ABOVE GROUND THAT ARE USED IN THE MAGNETIC FIELD STRENGTH CALCULATIONS. THESE DIMENSIONED HEIGHTS ARE REPRESENTATIVE OF THE MINIMUM EXISTING OR PROPOSED CONDUCTOR CLEARANCE IN THE SPECIFIED SEGMENT.

2. BUNDLED ACCR "STILT" CONDUCTOR HAS TWO SUB-CONDUCTORS SPACED VERTICALLY 12" APART. THE FINAL HEIGHT ABOVE GROUND FOR THIS CONDUCTOR IS 0'-6" LESS THAN THE DIMENSIONED HEIGHT.

"Engineering with Distinction"
ECI ELECTRICAL CONSULTANTS, INC.
BILLINGS, MONTANA

SILICON VALLEY POWER.
CITY OF SANTA CLARA

NRS-KRS 115 kV TRANSMISSION LINE

EMF FIGURES
FUTURE CROSS SECTION

DWG. NAME: FIGURE - 017
REV NO: A

NRS-KRS, 115 kV Transmission 715 kcmil 24/7 ACCR "Stilt", Bundled	
2024	Peak (A) - Normal (A) -
2028	Peak (A) 1207 Normal (A) 985.6

KRS-PLM, 60 kV Transmission 715 kcmil 24/7 ACCR "Stilt", Bundled	
2024	Peak (A) 242 Normal (A) 193.6
2028	Peak (A) 242 Normal (A) 193.6

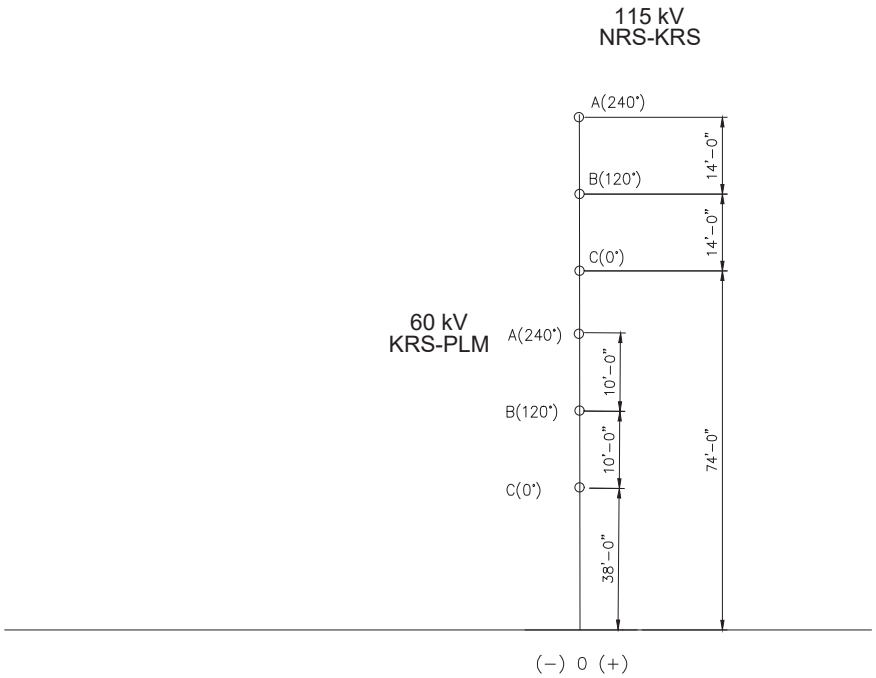

LOOKING SOUTH TOWARD KIFER RECEIVING STATION

NOTES:

1. THE DIMENSIONED HEIGHTS ABOVE GROUND ARE THE HEIGHTS ABOVE GROUND THAT ARE USED IN THE MAGNETIC FIELD STRENGTH CALCULATIONS. THESE DIMENSIONED HEIGHTS ARE REPRESENTATIVE OF THE MINIMUM EXISTING OR PROPOSED CONDUCTOR CLEARANCE IN THE SPECIFIED SEGMENT.

2. BUNDLED ACCR "STILT" CONDUCTOR HAS TWO SUB-CONDUCTORS SPACED VERTICALLY 12" APART. THE FINAL HEIGHT ABOVE GROUND FOR THIS CONDUCTOR IS 0'-6" LESS THAN THE DIMENSIONED HEIGHT.

"Engineering with Distinction"
ECI ELECTRICAL CONSULTANTS, INC.
BILLINGS, MONTANA

SILICON VALLEY POWER.
CITY OF SANTA CLARA

NRS-KRS 115 kV TRANSMISSION LINE

EMF FIGURES
FUTURE CROSS SECTION

DWG. NAME: FIGURE - 018 | REV NO: A

NRS-KRS, 115 kV Transmission 715 kcmil 24/7 ACCR "Stilt", Bundled	
2024	Peak (A) - Normal (A) -
2028	Peak (A) 1207 Normal (A) 965.6

KRS-PLM, 60 kV Transmission 715 kcmil 24/7 ACCR "Stilt", Bundled	
2024	Peak (A) 242 Normal (A) 193.6
2028	Peak (A) 242 Normal (A) 193.6

203R, 12 kV Distribution 1000 MCM 3/C UG AL Triplexed	
2024	Peak (A) 165 Normal (A) 132
2028	Peak (A) 165 Normal (A) 132

205R, 12 kV Distribution 1000 MCM 3/C UG AL Triplexed	
2024	Peak (A) 56 Normal (A) 44.8
2028	Peak (A) 56 Normal (A) 44.8

101L, 12 kV Distribution 750 MCM 3/C UG AL Triplexed	
2024	Peak (A) 241 Normal (A) 192.8
2028	Peak (A) 241 Normal (A) 192.8

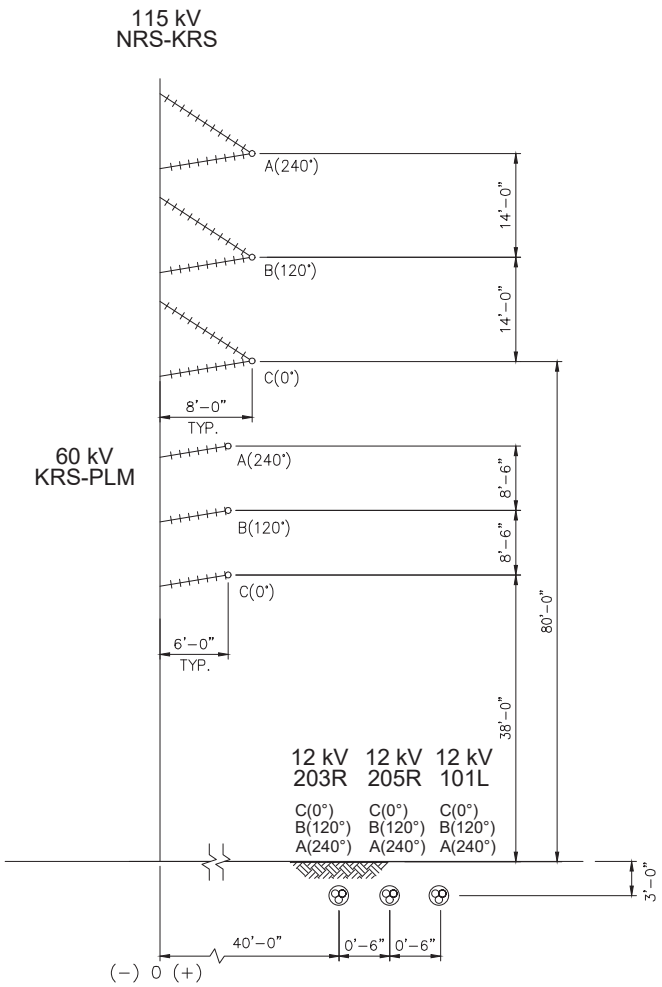

LOOKING SOUTH TOWARD KIFER RECEIVING STATION

NOTES:

1. THE DIMENSIONED HEIGHTS ABOVE GROUND ARE THE HEIGHTS ABOVE GROUND THAT ARE USED IN THE MAGNETIC FIELD STRENGTH CALCULATIONS. THESE DIMENSIONED HEIGHTS ARE REPRESENTATIVE OF THE MINIMUM EXISTING OR PROPOSED CONDUCTOR CLEARANCE IN THE SPECIFIED SEGMENT.

2. BUNDLED ACCR "STILT" CONDUCTOR HAS TWO SUB-CONDUCTORS SPACED VERTICALLY 12" APART. THE FINAL HEIGHT ABOVE GROUND FOR THIS CONDUCTOR IS 0'-6" LESS THAN THE DIMENSIONED HEIGHT.

"Engineering with Distinction"
ECI ELECTRICAL CONSULTANTS, INC.
BILLINGS, MONTANA

SILICON VALLEY POWER.
CITY OF SANTA CLARA

NRS-KRS 115 kV TRANSMISSION LINE

EMF FIGURES
FUTURE CROSS SECTION

DWG. NAME: FIGURE – 019
REV NO: A

Appendix H

Public Comments on Draft IS/MND

Comment Set A001 - California Department of Fish and Wildlife (CDFW)

Docusign Envelope ID: 941EA1C0-1B7A-448D-9387-74D92C00CC30

State of California – Natural Resources Agency
DEPARTMENT OF FISH AND WILDLIFE
Bay Delta Region
2825 Cordelia Road, Suite 100
Fairfield, CA 94534
(707) 428-2002
www.wildlife.ca.gov

GAVIN NEWSOM, Governor
CHARLTON H. BONHAM, Director

August 29, 2024

Allie Jackman, Project Manager, Principal Electric Utility Engineer
City of Santa Clara
881 Martin Avenue
Santa Clara, CA 95050
AJackman@SantaClaraCA.gov

Subject: NRS-KRS 115 kV Transmission Line, Draft Initial Study/Mitigated Negative Declaration, SCH No. 2024080009, City and County of Santa Clara

Dear Allie Jackman:

The California Department of Fish and Wildlife (CDFW) received a Notice of Intent to Adopt an Initial Study/Mitigated Negative Declaration (IS/MND) from the City of Santa Clara (City) for the Project pursuant the California Environmental Quality Act (CEQA) and CEQA Guidelines.[1] CDFW is submitting comments on the draft IS/MND as a means to inform the City as the Lead Agency, of potentially significant impacts to biological resources associated with the Project.

Thank you for the opportunity to provide comments and recommendations regarding those activities involved in the Project that may affect California fish and wildlife. Likewise, we appreciate the opportunity to provide comments regarding those aspects of the Project that CDFW, by law, may be required to carry out or approve through the exercise of its own regulatory authority under the Fish and Game Code.

CDFW ROLE

CDFW is California's **Trustee Agency** for fish and wildlife resources and holds those resources in trust by statute for all the people of the state. (Fish & G. Code, §§ 711.7, subd. (a) & 1802; Pub. Resources Code, § 21070; CEQA Guidelines § 15386, subd. (a).) CDFW, in its trustee capacity, has jurisdiction over the conservation, protection, and management of fish, wildlife, native plants, and habitat necessary for biologically sustainable populations of those species. (*Id.*, § 1802.) Similarly, for purposes of CEQA, CDFW is charged by law to provide, as available, biological expertise during public agency environmental review efforts, focusing specifically on projects and related activities that have the potential to adversely affect fish and wildlife resources.

CDFW is also submitting comments as a **Responsible Agency** under CEQA. (Pub. Resources Code, § 21069; CEQA Guidelines, § 15381). CDFW expects that it may

[1] CEQA is codified in the California Public Resources Code in section 21000 et seq. The "CEQA Guidelines" are found in Title 14 of the California Code of Regulations, commencing with section 15000.

Comment Set A001 - California Department of Fish and Wildlife (CDFW) (continued)

Docusign Envelope ID: 941EA1C0-1B7A-448D-9387-74D92C00CC30

need to exercise regulatory authority over the Project pursuant to the Fish and Game Code. For example, the Project may be subject to CDFW's Lake and Streambed Alteration (LSA) regulatory authority, if the Project impacts the bed, channel or bank of any river, stream or lake within the State (Fish & G. Code, § 1600 et seq.). Likewise, to the extent the Project may result in "take" as defined by State law of any species protected under the California Endangered Species Act (CESA) (Fish & G. Code, § 2050 et seq.), the Project proponent may seek related take authorization as provided by the Fish and Game Code.

REGULATORY REQUIREMENTS

California Endangered Species Act

A CESA Incidental Take Permit (ITP) must be obtained from CDFW if the Project has the potential to result in "take" of plants or animals listed under CESA, either during construction or over the life of the Project. Under CESA, "take" means "hunt, pursue, catch, capture, or kill, or attempt to hunt, pursue, catch, capture, or kill." (Fish & G. Code, § 86). CDFW's issuance of an ITP is subject to CEQA and to facilitate permit issuance, any Project modifications and mitigation measures must be incorporated into the CEQA document analysis, discussion, and mitigation monitoring and reporting program. If the Project will impact CESA listed species, early consultation is encouraged, as significant modification to the Project and mitigation measures may be required in order to obtain a CESA permit. **A1-1**

CEQA requires a mandatory finding of significance if a project is likely to substantially impact threatened or endangered species. Pub. Resources Code, §§ 21001, subd. (c) & 21083; CEQA Guidelines, §§ 15380, 15064 & 15065). In addition, pursuant to CEQA, the Lead Agency cannot approve a project unless all impacts to the environment are avoided or mitigated to less-than-significant levels, or the Lead Agency makes and supports Findings of Overriding Consideration (FOC) for impacts that remain significant despite the implementation of all feasible mitigation. FOC under CEQA, however, does not eliminate the Project proponent's obligation to comply with the Fish and Game Code.

Lake and Streambed Alteration

CDFW requires an LSA Notification, pursuant to Fish and Game Code section 1600 et seq., for Project activities affecting rivers, lakes or streams and associated riparian habitat. Notification is required for any activity that may substantially divert or obstruct the natural flow; change or use material from the bed, channel, or bank (including associated riparian or wetland resources); or deposit or dispose of material where it may pass into a river, lake, or stream. Work within ephemeral streams, drainage ditches, washes, watercourses with a subsurface flow, and floodplains is generally **A1-2**

Comment Set A001 - California Department of Fish and Wildlife (CDFW) (continued)

Docusign Envelope ID: 941EA1C0-1B7A-448D-9387-74D92C00CC30

subject to notification requirements. In addition, infrastructure installed beneath such aquatic features, such as through hydraulic directional drilling, is also generally subject to notification requirements. Therefore, any impact to the mainstems, tributaries, or floodplains or associated riparian habitat caused by the proposed Project will likely require an LSA Notification. **A1-2 (cont'd)**

Migratory Birds and Raptors

CDFW has authority over actions that may result in the disturbance or destruction of active bird nest sites or the unauthorized take of birds. Fish and Game Code sections protecting birds, their eggs, and nests include section 3503 (regarding unlawful take, possession, or needless destruction of the nests or eggs of any bird), section 3503.5 (regarding the take, possession, or destruction of any birds-of-prey or their nests or eggs), and section 3513 (regarding unlawful take of any migratory nongame bird). Migratory birds are also protected under the federal Migratory Bird Treaty Act (MBTA). **A1-3**

Fully Protected Species

Several Fully Protected Species (Fish & G. Code § 3511 and 4700) have the potential to occur within or adjacent to the Project area. **A1-4**

Project activities described in the IS/MND should be designed to completely avoid any fully protected species that have the potential to be present within or adjacent to the Project area. Fully protected species may not be taken or possessed at any time and no licenses or permits may be issued for their take except as follows:

Take is for necessary scientific research;

- Efforts to recover a fully protected, endangered, or threatened species, live capture and relocation of a bird species for the protection of livestock; or
- They are a covered species whose conservation and management is provided for in a Natural Community Conservation Plan (Fish & G. Code, §§ 3511, 4700, 5050, & 5515).

Specified types of infrastructure projects may be eligible for an ITP for unavoidable impacts to fully protected species if certain conditions are met (Fish & G. Code §2081.15).

CDFW also recommends the IS/MND analyze potential adverse impacts to fully protected species due to habitat modification, loss of foraging habitat, and/or interruption of migratory and breeding behaviors. CDFW recommends that the City include in the analysis how appropriate avoidance, minimization and mitigation measures will reduce indirect impacts to fully protected species. Project proponents should consult with

Comment Set A001 - California Department of Fish and Wildlife (CDFW) (continued)

Docusign Envelope ID: 941EA1C0-1B7A-448D-9387-74D92C00CC30

CDFW early in the Project planning process. **A1-4 (cont'd)**

PROJECT DESCRIPTION SUMMARY

Proponent: City of Santa Clara

Objective: Silicon Valley Power (SVP) is proposing to construct approximately 2.24 miles of a new 115 kilovolts (kV) transmission line (Project) within the City of Santa Clara limits in Santa Clara County, California. The proposed transmission line will begin at the SVP Northern Receiving Station (NRS), approximately 0.2 miles southeast of Levi's Stadium, and would travel south down Lafayette Street, Bassett Street and Duane Avenue to end at the SVP Kifer Receiving Station (KRS), approximately 0.1 miles northwest of the intersection of Lafayette Street and Central Expressway.

Two different Options have been proposed for the Project. Under Option 1, the entire Project would be overhead, with transmission lines on new poles. Under Option 2, the Project would be underground from the median of Lafayette Street near NRS to approximately 300 feet south of the intersection of Lafayette Street and Agnew Road, then overhead south of Agnew Road to KRS.

Location: The NRS is located south of the intersection of Bill Walsh Way and Stars and Stripes Drive, immediately adjacent to the southeast corner of Levi's Stadium. The KRS is located approximately 0.1 miles northwest of the intersection of Lafayette Street and Central Expressway in the City and County of Santa Clara, Citywide.

Timeframe: The construction phase is expected to take approximately 14 months for the overhead option and is anticipated to be completed by early 2028.

COMMENTS AND RECOMMENDATIONS

CDFW offers the comments and recommendations below to assist the City in adequately identifying and/or mitigating the Project's significant, or potentially significant, direct and indirect impacts on fish and wildlife (biological) resources.

ENVIRONMENTAL SETTING

Sufficient information regarding the environmental setting is necessary to understand any potentially significant impacts on the environment of the proposed Project (CEQA Guidelines, §§15063 & 15360). CDFW recommends that a full list or table is included in the updated Biological Resources Section of the IS/MND that notes species common name, scientific name, state and federal listing status (as applicable), habitat type preference and determination on presence, for all special-status species with the potential to occur within the Project area. **A1-5**

Comment Set A001 - California Department of Fish and Wildlife (CDFW) (continued)

Docusign Envelope ID: 941EA1C0-1B7A-448D-9387-74D92C00CC30

Allie Jackman
City of Santa Clara
August 29, 2024
Page 5

CDFW recommends the IS/MND provide baseline habitat assessments for special-status plant, fish and wildlife species located and potentially located within the Project area and surrounding lands, including all rare, threatened, and endangered species (CEQA Guidelines, §15380). The IS/MND should describe aquatic habitats, such as wetlands or waters of the U.S. or State, and any sensitive natural communities or riparian habitat occurring on or adjacent to the Project area (for sensitive natural communities see: https://wildlife.ca.gov/Data/VegCAMP/NaturalCommunities#sensitive%20natural%20communities), and any stream or wetland set back distances the City or Santa Clara County may require. **A1-6**

CDFW recommends that the California Natural Diversity Database (CNDDB), as well as previous studies performed in the area, be consulted to assess the potential presence of sensitive species and habitats. A nine United States Geologic Survey 7.5-minute quadrangle search is recommended to determine what may occur in the region, larger if the Project area extends past one quad (see *Data Use Guidelines* on the Department webpage www.wildlife.ca.gov/Data/CNDDB/Maps-and-Data). Please review the webpage for information on how to access the database to obtain current information on any previously reported sensitive species and habitat, including Significant Natural Areas identified under Chapter 12 of the Fish and Game Code, in the vicinity of the Project. CDFW recommends that CNDDB Field Survey Forms be completed and submitted to CNDDB to document survey results. Online forms can be obtained and submitted at: https://www.wildlife.ca.gov/Data/CNDDB/Submitting-Data. **A1-7**

Please note that CDFW's CNDDB is not exhaustive in terms of the data it uses, nor is it an absence database. CDFW recommends that it be used as a starting point in gathering information about the *potential presence* of species within the general area of the Project site. Other sources for identification of species and habitats near or adjacent to the Project area should include, but may not be limited to, State and federal resource agency lists, California Wildlife Habitat Relationship System, California Native Plant Society Inventory, agency contacts, environmental documents for other projects in the vicinity, academics, and professional or scientific organizations. Only with sufficient data and information can the City adequately assess which special-status species are likely to occur in the Project vicinity.

According to Biogeographic Information and Observation System (BIOS) records, the Project site contains positive detections of several special-status species and has the potential to support numerous special-status species and their associated habitat. Species with potential to occur on-site include but are not limited to those listed in Attachment 1. **A1-8**

Comment Set A001 - California Department of Fish and Wildlife (CDFW) (continued)

Docusign Envelope ID: 941EA1C0-1B7A-448D-9387-74D92C00CC30

Allie Jackman
City of Santa Clara
August 29, 2024
Page 6

I. Environmental Setting and Related Impact Shortcoming

Would the Project have a substantial adverse effect, either directly or through habitat modifications, on any species identified as a candidate, sensitive, or special-status species in local or regional plans, policies, or regulations, or by CDFW or U.S. Fish and Wildlife Service (USFWS)?

COMMENT 1: Nesting Bird Surveys **A1-9**

The Project includes removal of up to 3 trees and pruning of an additional 33 trees. In CNDDB, white-tailed kite (*Elanus leucurus*), and tricolored blackbird (*Agelaius tricolor*) have been seen within two miles of the Project and golden eagle within three miles of the Project. The draft IS/MND states that the Project has the potential to disturb special-status species and nesting habitat for birds and raptors. Take of nesting birds, birds in the orders Falconiformes or Strigiformes, and migratory nongame bird as designated in the MBTA is a violation of Fish and Game Code (§ 3503, 3503.5, 3513).

Impacts could occur through direct damage or mortality to birds and nests as well as potential electrocution. The draft IS/MND states that the Project is being designed with enough distance in between the conductor wires, so it will be in compliance with current Avian Power Line Interaction Committee (APLIC) guidelines (p. 4-3). Electric distribution lines are typically placed within the range of average bird flight level and are difficult for birds to see. Many birds, particularly raptors and waterbirds, seek out tall perches like distribution poles to hunt for food or perch and roost. Frequent use of poles increases the exposure to energized parts when flying on and off a pole. Nesting material may also cause an electrical connection, or the nest material could catch on fire, killing the bird and damaging the power structure.

Linear features such as generator-tie lines and interior and perimeter fences present collision hazard to birds, and electric lines represent a potential electrocution hazard. The IS/MND should include measures that require all powerlines to be placed underground, if feasible, and as noted in parts of “Option 2”.

Recommended Mitigation Measure 1: Nesting Bird Surveys **A1-10**

Amend MM BIO-4 to include the following considerations. If Project-related work is scheduled during the nesting season (typically February 15 to August 30 for small bird species such as passerines; January 15 to September 15 for owls; and February 15 to September 15 for other raptors), a professional biologist experienced with the applicable species and habitat shall conduct two surveys for active nests of such birds within 14 days prior to the beginning of Project construction, with a final survey conducted within 48 hours prior to construction. Appropriate minimum survey radii surrounding the work area are typically the following: i) 250 feet for passerines; ii) 500 feet for small raptors

Comment Set A001 - California Department of Fish and Wildlife (CDFW) (continued)

Docusign Envelope ID: 941EA1C0-1B7A-448D-9387-74D92C00CC30

such as accipiters; and iii) 1,000 feet for larger raptors such as buteos. Surveys shall be conducted at the appropriate times of day and during appropriate nesting times. **A1-10 (cont'd)**

Recommended Mitigation Measure 2: Avian Electrocution Assessment **A1-9**

The City shall investigate methods to prevent bird nesting and perching on transmission line infrastructure leading to potential electrocution through design changes or installation of deterrents to the greatest extent feasible. All aboveground lines should be fitted with bird flight diverters or visibility enhancement devices. When lines cannot be placed underground, appropriate avian protection designs should be employed. As a minimum requirement, the electrical line system should conform with the most current edition of the APLIC guidelines to prevent electrocutions. Resources may be found on the APLIC website at https://www.aplic.org/mission. CDFW staff are available to assist in determination of measures to protect avian species.

COMMENT 2: Bats **A1-11**

The Project includes removal of up to 3 trees and pruning of an additional 33 trees. In order to determine the extent to which impacts may occur to bats and determine where habitat loss may occur from the removal of trees, the IS/MND should propose measures to conduct a bat habitat assessment of suitable bat roosting habitat.

Recommended Mitigation Measure 3: Survey Methodology Plan

Bats use a variety of materials for roosting including tree hollows, rock crevices, mines, caves, and man-made structures. A qualified bat biologist shall develop a survey methodology plan for CDFW review and approval. Historic and future survey data at this location shall be submitted to the CNDDB, https://wildlife.ca.gov/Data/CNDDB, CDFW's Report a Bat Colony page, https://wildlife.ca.gov/Conservation/Mammals/Bats/Report-Colony, and/or the North American Bat Monitoring Program, https://www.nabatmonitoring.org/. The survey plan shall include pre- and post-Project construction surveys to better understand the impacts of the Seismic Retrofit project on the colony. The qualified bat biologist shall review and consider survey protocols located at the North American Bat Monitoring Program's Collect Data page, https://www.nabatmonitoring.org/collect-data.

Recommended Mitigation Measure 4: Habitat Assessment and Tree Removal Plan

Within 14 days of the start of Project and tree removal activities, a qualified bat biologist shall assess all trees within the construction area to determine if they contain suitable bat roosting habitat (e.g., cavities, crevices, deep bark fissures). If any trees contain such habitat, bat presence shall be presumed. Trees containing bat roosting habitat shall be removed using the method described below during the following seasonal periods of bat activity:

Comment Set A001 - California Department of Fish and Wildlife (CDFW) (continued)

Docusign Envelope ID: 941EA1C0-1B7A-448D-9387-74D92C00CC30

Allie Jackman
City of Santa Clara
August 29, 2024
Page 8

A1-11 (cont'd)

Prior to maternity season – from approximately March 1 (or when night temperatures are above 45°F and when rains have ceased) through April 15 (when females begin to give birth to young); and prior to winter torpor – from September 1 (when young bats are self-sufficiently volant) until October 15 (before night temperatures fall below 45°F and rains begin):

On day one, in the afternoon and under the supervision of a qualified biologist, chainsaws shall only be used to remove tree limbs that do not contain suitable bat roosting habitat (e.g., cavities, crevices, deep bark fissures). The next day, the rest of the tree shall be removed.

If trees containing bat habitat cannot be removed during the above seasonal periods of bat activity, a qualified bat biologist shall survey the trees to determine if the tree contains a maternity colony or winter torpor bats. If the qualified biologist cannot make this determination with certainty, the presence of maternity colonies or winter torpor bats shall be assumed, and removal of the tree shall be delayed until the seasonal periods of bat activity specified above. If the biologist determines bats are present but a maternity colony or winter torpor bats are absent, then the tree may be removed outside of the above periods of seasonal bat activity using the above two-step tree removal process. If the qualified biologist determines that bats are absent, then the tree may be removed without bat seasonality or method restrictions.

Recommended Mitigation Measure 5: Compensatory Mitigation Plan

The IS/MND shall include appropriate and feasible compensatory mitigation for any loss of bat habitat including any impacts to the maternity, roosting, and/or hibernating habitat documented during bat protocol-level surveys. If the Project is expected to result in any loss of such bat habitat types, the mitigation and monitoring plan (Mitigation Measure 7 Mitigation and Monitoring Plan) shall include a biologically appropriate mitigation proposal to fully offset the loss of bat habitat.

COMMENT 3: Crotch's bumble bee A1-12

Crotch's bumble bee (*Bombus crotchii*) are candidate species under CESA (CEQA Guidelines, §15380, subds. (c)(1)). Crotch's bumble bee occurrences have been documented within the vicinity of the Project area and historic observations occur elsewhere in Santa Clara County (CDFW 2023). The Project location is within the Crotch's bumble bee range (https://wildlife.ca.gov/Conservation/CESA) and ruderal grassland within and adjacent to the Project area may contain potential habitat for Crotch's bumble bee.

The Project includes construction of foundations, underground duct banks, transport and installation and removal of poles, and substations that would create ground disturbances and that may occur within ruderal grass and herbaceous vegetation that

Comment Set A001 - California Department of Fish and Wildlife (CDFW) (continued)

Docusign Envelope ID: 941EA1C0-1B7A-448D-9387-74D92C00CC30

may be potential Crotch's bumble bee nesting and foraging habitat. Potential impacts include direct mortality through crushing or filling of active bee colonies and hibernating bee cavities, reduced reproductive success, loss of suitable breeding and foraging habitats, loss of native vegetation that may support essential foraging habitat. **A1-12 (cont'd)**

Recommended Mitigation Measure 6: Habitat Assessment

A habitat assessment shall be conducted by a qualified entomologist knowledgeable with the life history and ecological requirements of Crotch's bumble bee. The habitat assessment shall include all suitable nesting, overwintering, and foraging habitats within the Project area and surrounding areas. Potential nest habitat (February through October) could include that of other *Bombus* species such as bare ground, thatched grasses, abandoned rodent burrows or bird nests, brush piles, rock piles, and fallen logs. Overwintering habitat (November through January) could include that of other *Bombus* species such as soft and disturbed soil or under leaf litter or other debris. The habitat assessment shall be conducted during peak bloom period for floral resources on which Crotch's bumble bee feed. Further guidance on habitat surveys can be found within *Survey Considerations for California Endangered Species Act (CESA) Candidate Bumble Bee Species* (https://wildlife.ca.gov/Conservation/CESA).

Recommended Mitigation Measure 7: Herbicide Application

To minimize impacts to bumble bees, avoid the bloom periods for herbicide application and mowing activities. If this is not possible, CDFW recommends that the Project obtain take authorization under an ITP, pursuant to Fish and Game Code section 2081 subdivision (b).

Recommended Mitigation Measure 8: Crotch's Bumble Bee Avoidance or Take Authorization

If Crotch's bumble bee are detected during pre-construction surveys, a Crotch's bumble bee avoidance plan shall be developed and provided to CDFW for review prior to work activities involving ground disturbance or vegetation removal. If full take avoidance is not feasible, CDFW strongly recommends that the Project proponent apply to CDFW for take authorization under an ITP.

COMMENT 4: Western Burrowing Owl **A1-13**

Burrowing owl is designated by CDFW as a California Species of Special Concern (SSC) due to population decline and breeding range retraction. The species has also experienced a severe population decline in Santa Clara County. Known populations of burrowing owl occur within and adjacent to the Project area, including Levi's Stadium, and other suitable habitat.

Comment Set A001 - California Department of Fish and Wildlife (CDFW) (continued)

Docusign Envelope ID: 941EA1C0-1B7A-448D-9387-74D92C00CC30

Allie Jackman
City of Santa Clara
August 29, 2024
Page 10

The Project includes construction of foundations, underground duct banks, transport and installation and removal of poles, and substations that would create ground disturbances and that may occur within ruderal grass and herbaceous vegetation that may be potential burrowing owl habitat. Direct mortality could occur through crushing of adults or young within burrows, loss of nesting burrows, loss of nesting habitat, loss of foraging habitat resulting in reduced nesting success (loss or reduced health or vigor of eggs or young), nest abandonment, and reduced frequency or duration of care for young resulting in reduced health or vigor of young. **A1-13 (cont'd)**

Recommended Mitigation Measure 9: Habitat Assessment and Surveys

The IS/MND should include a thorough habitat assessment of potential burrowing owl habitat within and adjacent to the Project area. A professional biologist experienced with burrowing owl and their habitat should conduct a field assessment that includes all areas that could be directly or indirectly impacted by the Project and include data such as vegetation type, vegetation structure and presence of burrows. Specific information on habitat assessment, burrowing owl survey methods, buffer distances and mitigation is provided in the CDFW Staff Report on Burrowing Owl Mitigation, dated March 7, 2012, and available at https://wildlife.ca.gov/Conservation/Survey-Protocols#377281284-birds.

Recommended Mitigation Measure 10: Burrowing Owl Avoidance

The IS/MND should state that if burrowing owls are detected during surveys within or near the Project area, a protective buffer in which construction activities will be avoided will be established. Appropriate buffers typically have a 50 to 500-meter radius and vary depending on the level of disturbance and timing of construction. If the burrowing owls show signs of distress (e.g., defensive vocalizations and/or flying away from the nest), the buffer distance should be increased.

ENVIRONMENTAL DATA

CEQA requires that information developed in environmental impact reports and negative declarations be incorporated into a data base which may be used to make subsequent or supplemental environmental determinations. (Pub. Resources Code, § 21003, subd. (e)). Accordingly, please report any special-status species and natural communities detected during Project surveys to the CNDDB. The CNDDB field survey form can be filled out and submitted online at the following link: https://wildlife.ca.gov/Data/CNDDB/Submitting-Data. The types of information reported to CNDDB can be found at the following link: https://www.wildlife.ca.gov/Data/CNDDB/Plants-and-Animals.

Comment Set A001 - California Department of Fish and Wildlife (CDFW) (continued)

Docusign Envelope ID: 941EA1C0-1B7A-448D-9387-74D92C00CC30

ENVIRONMENTAL DOCUMENT FILING FEES

The Project, as proposed, would have an impact on fish and/or wildlife, and assessment of environmental document filing fees is necessary. Fees are payable upon filing of the Notice of Determination by the Lead Agency and serve to help defray the cost of environmental review by CDFW. Payment of the environmental document filing fee is required in order for the underlying project approval to be operative, vested, and final. (See Cal. Code Regs, tit. 14, § 753.5; Fish & G. Code, § 711.4; Pub. Resources Code, § 21089.)

CONCLUSION

CDFW appreciates the opportunity to comment on the IS/MND to assist the City in identifying and mitigating Project impacts on biological resources.

Questions regarding this letter or further coordination should be directed to Marcus Griswold, Senior Environmental Scientist (Specialist), at (707) 815-6451 or Marcus.Griswold@wildlife.ca.gov or Jason Faridi, Senior Environmental Scientist (Supervisory), at Jason.Faridi@wildlife.ca.gov.

Sincerely,

Signed by:
Greg Martinelli for
7E1D27B5645E452...
Erin Chappell
Regional Manager
Bay Delta Region

Attachment 1: Special-Status Species and Commercially/Recreationally Important Species

ec: Office of Planning and Research, State Clearinghouse (SCH No. 2024080009)
Craig Weightman, Bay Delta Region – Craig.Weightman@wildlife.ca.gov

REFERENCES

California Department of Fish and Wildlife (CDFW). 2024. Biogeographic Information and Observation System (BIOS). https://www.wildlife.ca.gov/Data/BIOS. Accessed April 25, 2024.

Comment Set A001 - California Department of Fish and Wildlife (CDFW) (continued)

Docusign Envelope ID: 941EA1C0-1B7A-448D-9387-74D92C00CC30

Allie Jackman
City of Santa Clara
August 29, 2024
Page 12

ATTACHMENT 1: Special-Status Species

Species	Status
Fish and Invertebrates	
Crotch's bumble bee (*Bombus crotchii*)	State candidate (SC)
Birds	
Alameda song sparrow (*Melospiza melodia pusillula*)	Species of Special Concern (SSC)
Cooper's hawk (*Accipiter cooperii*)	State Watch List
burrowing owl (*Athene cunicularia*)	SSC
golden eagle (*Aquila chrysaetos*)	State Fully Protected (FP)
northern harrier (*Circus hudsonius*)	SSC
tricolored blackbird (*Agelaius tricolor*)	State Listed - Threatened, SSC
white-tailed kite (*Elanus leucurus*)	FP
Mammals	
pallid bat (*Antrozous pallidus*)	SSC
San Francisco dusky-footed woodrat (*Neotoma fuscipes annectens*)	SSC
Townsend's big-eared bat (*Corynorhinus townsendii*)	SSC
Reptiles and Amphibians	
western pond turtle (*Emys marmorata*)	Proposed Federally Listed - Threatened, SSC
Plants	
Congdon's tarplant (*Centromadia parryi ssp. congdonii*)	S2, 1B.1

Email: NRS-KRS 115 kV T-Line

From: Wu, Elton H <EWu@sfwater.org>
Sent: Monday, August 26, 2024 3:55 PM
To: NRS-KRS Project
Cc: Wilson, Joanne; Read, Emily; Leung, Tracy; Feng, Stacie; Natesan, Ellen; Rando, Casey; RES; NRLM Public Notices; Russell, Rosanna S
Subject: NRS-KRS 115 kV Transmission Line Project- Public Notification Response
Attachments: FINAL Interim Water Pipeline Right of Way Policy.pdf; 2015 Real Estate Guidelines.pdf; FINAL-Amended Right of Way Integrated Vegetation Management Policy.pdf

Hello,

Thank you for the opportunity to comment on the Initial Study/ Mitigated Negative Declaration. The City and County of San Francisco owns right of way property for high pressure water pipelines that traverse Santa Clara County. These pipelines (Bay Division Pipeline Nos. 3 and 4) are operated and maintained by the San Francisco Public Utilities Commission (SFPUC). Sections of the SFPUC Right of Way (ROW) are located within the proposed project site generally south of Levi Stadium:

- SFPUC Parcel No. 128-A. (A portion of APN 097-05-002)
- SFPUC Parcel No. 130. (A portion of APN 104-06-020)
- SFPUC Parcel No. 132. (A portion of APN 104-06-041)
- The SFPUC also has a permit for its pipelines on land owned by Santa Clara County and an easement from the railroad

Background

The SFPUC manages approximately 60,000 acres of watershed land and 150 miles of pipeline ROW in three Bay Area counties. These lands are part of the Hetch Hetchy Regional Water System providing water to approximately 2.7 million customers. The SFPUC monitors and protects its lands by reviewing proposed projects and activities that may affect SFPUC lands and infrastructure for consistency with SFPUC policies and plans.

San Francisco, through the SFPUC, operates several active water transmission pipelines including within the proposed project site in Santa Clara. These pipelines serve millions of water customers and include the Bay Division Pipeline (BDPL) Nos. 3 and 4. The ROW's primary purpose is to serve as utility corridors for water transmission. The primary use of the ROW land is for the delivery, operation, maintenance, and protection of its drinking water supply system. Secondary uses of ROW lands devoted to these purposes may be permitted only if those uses do not in any way interfere with, endanger or damage existing or future operations or the security of those systems.

Comments Regarding the Initial Study/ Mitigated Negative Declaration

Please work with Real Estate Services regarding the land rights as the project progresses. Since the SFPUC has a land right within the project site that gives it discretionary authority, the SFPUC should be listed as a responsible agency pursuant to the California Environmental Quality Act (CEQA). If staging or other construction activities are proposed on SFPUC fee owned property, then the SFPUC would be a responsible agency under CEQA. This should be stated in the environmental review document. As the project progresses, the project will need to come to SFPUC Project Review (which is further explained below).

In addition, the attached SFPUC land use policies should be included in the land use analysis and general analysis of the Initial Study/ Mitigated Negative Declaration. Land use and planning analyses

under CEQA generally consider the compatibility of a project with neighboring areas, change to or displacement of existing uses, and consistency of a project with relevant local land use policies. The magnitude of land use conflicts or compatibility issues depends on the extent to which a project physically divides an established community or conflicts with any land use plan, policy, or regulation adopted for the purpose of avoiding or mitigating an environmental effect such that an adverse impact on the environment occurs.

The SFPUC maintains policies to help inform how and in which instances its ROW can serve the needs of public agencies, private parties, nonprofit organizations, and developers while maintaining the safety and security of the pipelines that run underneath the ROW. SFPUC policies pertain to land use and structures, recreational use, utilities, vegetation, and water efficiency. Construction of structures on the ROW is generally prohibited, with prohibitions on structures or improvements that require excavation, bored footings, or concrete pads that are greater than 6 inches deep. No structures may be placed directly on top of a pipeline or within 20 feet of the edge of a pipeline. No utilities may be installed on the ROW running parallel to SFPUC's pipelines; utilities may run perpendicular to pipelines with SFPUC approval. According to the SFPUC Real Estate Guidelines (copy attached), this includes the prohibition of aerial utility crossing or overhead transmission lines within the ROW. As the project progresses, SFPUC retains the right to disallow any use that, at the SFPUC's sole discretion, may interfere with, endanger or damage existing or future SFPUC operations, security, or facilities.

If the proposed project or associated elements (ie: staging and overhead transmission lines) is located on or over SFPUC fee owned property, then certain SFPUC policies would apply. According to SFPUC's Interim Water Pipeline Right of Way Use Policy for San Mateo, Santa Clara, and Alameda Counties (copy attached), the SFPUC typically issues 5-year licenses for use of its property, with a form of rent and insurance required upon signing. These licenses are revocable, meaning that SFPUC can revoke them prior to the 5-year expiration. The licensee (user of SFPUC property) is to maintain landscaping and equipment to ensure that water is used efficiently. Water runoff leaving a landscaped area due to low head drainage, overspray, broken irrigation hardware, or other similar conditions is prohibited. Structures on the ROW are generally prohibited under SFPUC's policies.

The SFPUC prohibits any use on its ROW property that:

1. Includes aerial utility crossing or overhead transmission lines within the ROW;

2. Cannot be removed promptly, to allow SFPUC construction, maintenance, or emergency repairs of its facilities.

3. Would conflict with SFPUC legal obligations to adjoining property owners or tenants. Some SFPUC parcels in the City of Milpitas could be subject to easements or other agreements held by adjoining landowners or third parties which may present conflicts with the proposed trail. Further research by the SFPUC's Real Estate Services is needed, but it is possible that certain SFPUC parcels may not be available for trail use.

4. Would conflict with the resolution of unauthorized third-party encroachments that currently exist on some SFPUC ROW parcels.

5. Would create an unreasonable burden for the SFPUC (or its ratepayers) in the use of its property for utility purposes. The SFPUC reasonably anticipates that its property in the City of Milpitas will be available for future utility infrastructure and capital projects. Revocable licenses and leases issued by the SFPUC contain standard language requiring any lessee or licensee of SFPUC lands to mitigate the effects for the disruption of its recreational use on SFPUC lands, even if the SFPUC is causing the disruption of the recreational use. This includes required mitigation under the California Environmental Quality Act (CEQA).

6. Is otherwise inconsistent with SFPUC plans and policies.

This list is not exhaustive. The SFPUC retains the right to disallow any use that, at the SFPUC's sole discretion, may interfere with, endanger or damage existing or future SFPUC operations, security, or facilities.

In the case that landscaping is included in the proposal, then the SFPUC's policies regarding vegetation on its Right of Way would apply. The SFPUC's Right of Way Integrated Vegetation Management Policy (copy attached) was established to manage vegetation on the transmission, distribution, and collection systems within SFPUC's ROW so that it does not pose a threat or hazard to the system's integrity and infrastructure or impede utility maintenance and operations. These policies include regulations on the types of plantings that are permitted to occur within each zone of the ROW, regulations on annual grass and weed management, and policies pertaining to vegetation removal. If the proposed project were to include landscaping on SFPUC fee owned property, then these policies would apply.

SFPUC Project Review Process

Temporary staging areas and impacts from construction activities affecting the SFPUC right of way require extensive evaluation. This includes aerial utility crossing or overhead transmission lines.

Proposed projects and other activities on any SFPUC property or easement must undergo the Project Review Process if the project will include construction; digging or earth moving; clearing; installation; the use of hazardous materials; other disturbance to ROW resources; or the issuance of new or revised leases, licenses and permits. Even if the SFPUC pipelines are within a public right of way or area where the SFPUC does not have a land right, Project Review is recommended to avoid adverse impacts to critical water infrastructure. This review is done by the SFPUC's Project Review Committee (Committee).

The Committee is a multidisciplinary team with expertise in natural resources management, environmental regulatory compliance, engineering, water quality and real estate. Projects and activities are vetted by the Committee for consistency with SFPUC plans and policies.

In reviewing a proposed project, the Committee may conclude that modifications or avoidance and minimization measures are necessary. Large and/or complex projects may require several project review sessions to review the project at significant planning and design stages.

To initiate the Project Review process, please download and fill out a Project Review application at Project Review and Land Use - Bay Area (sfpuc.gov). Please submit the completed application to projectreview@sfwater.org and it will be scheduled for the next available Project Review meeting.

If you have any questions or need more information, please contact me or my supervisor, Casey Rando, Senior Environmental Compliance Planner, at crando@sfwater.org.

Thanks,

Elton Wu
Pronouns: He/ Him
Environmental Compliance and Land Planner
SFPUC Water Enterprise
Natural Resources and Lands Management Division
525 Golden Gate Avenue, 10th Floor
San Francisco, CA 94102
cell: (415) 971-7657
ewu@sfwater.org

Hetch Hetchy Regional Water System
Services of the San Francisco Public Utilities Commission

San Francisco Public Utilities Commission
Real Estate Guidelines

Real Estate Services Division

January 13, 2015

This page is intentionally left blank.

Table of Contents

1 INTRODUCTION 1

1.1 Real Estate Services Division 1

1.2 The SFPUC Right of Way 1

1.3 RES' Responsibilities 1

1.4 Permits Issued by Other SFPUC Divisions 2

1.5 Coordination with the City Real Estate Division 2

1.6 Other Divisions Manage SFPUC Facilities 2

2 LAND USE 3

3 LEASE AND LICENSE PRE-REQUISITES 4

3.1 Forms and the City Attorney's Office 4

3.2 Tenant and Licensee Selection Guidelines 4

3.3 Economic Terms 5

3.4 Guidelines for Determining Rent for Leases and Licenses 5

3.5 Project Review 7

3.6 Insurance 7

3.7 CEQA Clearance 8

4 LEASING POLICIES (CITY AS LANDLORD) 9

4.1 Lease Approvals, Fees, and Security Deposits 9

4.2 Lease Execution 9

4.3 Approval of Lease Amendments and Assignments 9

4.4 Special Cases 9

5 LICENSING POLICIES (CITY AS LICENSOR) 11

5.1 General 11

5.2 License Approvals, Fees, and Security Deposits 11

5.3 Special Cases 11

6 AGREEMENT APPROVALS 17

6.1 General Agreement Approval Authority 17

6.2 Approval Authority for Agreements Issued to Public Agencies and Nonprofit Organizations with a Charitable Purpose 18

6.3 General Manager's Discretion 19

6.4 Lease and License Reporting 19

7 SFPUC AS TENANT OR LICENSEE 20

SFPUC Real Estate Guidelines

7.1 Approval and Execution Authority 20
7.2 Lease and License Types 20
8 RENTAL ACCOUNTING 22
8.1 Processing Fees 22
8.2 Late Fees and Grace Periods 22
8.3 Employee Housing Rent Credits 22
8.4 Southeast Community Facility Rent Offsets 23
8.5 Capital Project-Induced Rent Credits 23
8.6 Grazing Tenant Long-Term Maintenance Rent Credits 23
9 EASEMENT AGREEMENTS 24
10 CONCLUSION 24

ACRONYMS AND DEFINITIONS

Acting General Manager	Deputy General Manager or Assistant General Manager specifically authorized to issue approvals and sign documents in the General Manager's absence
AGM	Assistant General Manager
BEM	Bureau of Environmental Management
CAO	City Attorney's Office
CDD	City Distribution Division
MOU	Memorandum of Understanding
NRLM	Natural Resources and Lands Management Division
RES	Real Estate Services Division
Restricted Use	Defined in Section 5.3.1
ROW	Right of Way
SECF	Southeast Community Facility
SFPUC	San Francisco Public Utilities Commission
SSIP	Sewer System Improvement Program
WSIP	Water System Improvement Program
WST	Water Supply and Treatment Division

SFPUC Real Estate Guidelines

1 Introduction

1.1 Real Estate Services Division

The Real Estate Services Division (**RES**) of the San Francisco Public Utilities Commission (**SFPUC**) oversees SFPUC real property with income-producing potential. It also coordinates with SFPUC enterprises to oversee SFPUC real estate used by a third party pursuant to a lease, license, memorandum of understanding (**MOU**), or other agreement. To this end, RES performs asset management, leasing, licensing, sales and acquisitions, and development services for these lands. RES analysts spend the majority of their time negotiating licenses and leases.

The property under RES administration varies widely, ranging from golf courses to parking lots, quarries, employee housing, utility crossings, and agricultural lands.

1.2 The SFPUC Right of Way

As part of its utility system, the SFPUC operates and maintains approximately 1600 miles of water pipelines and tunnels, 160 miles of electrical transmission lines, and 900 miles of sewer lines and other related appurtenances that run through real property (**Right of Way** or **ROW**) located in San Francisco, San Mateo, Santa Clara, Alameda, Tuolumne, Stanislaus and San Joaquin Counties. The City and County of San Francisco (**City**) owns most of the ROW in fee, although in some instances the SFPUC holds only an easement instead.

1.3 RES' Responsibilities

RES:

- issues leases and long-term licenses for SFPUC property;
- issues leases for employee housing;
- develops and implements policies to support the efficient operation of the SFPUC's income-producing real estate;
- performs asset and certain asset administration functions for the SFPUC's income-producing real estate;
- consults with other SFPUC divisions regarding real estate matters;
- acts as a liaison to other SFPUC divisions to support pipeline improvement programs with respect to ROW real estate issues, such as the Water System Improvement Program (WSIP) and the Sewer System Improvement Program (SSIP);
- manages the following real estate matters:
  - purchase and sale of real property interests, easements, and ancillary transactions for SFPUC lands, including transfers between the SFPUC and other City departments;
  - lease of real property where the SFPUC is a tenant; and
  - consultation with the City Real Estate Division regarding other real estate matters as required by the City Charter and Administrative Code; and
- seeks to develop and implement procedures to acquire permanent rights where the SFPUC only has revocable or conditional rights within the existing ROW.

1.4 Permits Issued by Other SFPUC Divisions

Five SFPUC divisions regularly issue access or use permits for SFPUC lands: RES, NRLM, the Hetch Hetchy Water and Power System (**Hetch Hetchy**), CDD and the Wastewater Enterprise.

The Land Engineering Division issues consent letters for potholing to locate pipeline depth and drafts consent letters in consultation with RES and the CAO.

NRLM, CDD and the Wastewater Enterprise issue temporary access permits for short-term use of watershed and other SFPUC land and certain pipeline ROW uses with minimal revenue-generating potential, e.g., access for biological surveys and environmental studies, photography, weddings, equestrian use, etc., as provided under Resolution No. 01-0090.

Similar to the permits described above, Hetch Hetchy issues various non-revenue generating permits and consents for access and other uses of the SFPUC lands under its jurisdiction.

Because some of these categories overlap, interdivision consultation occurs regularly.

1.5 Coordination with the City Real Estate Division

Pursuant to Section 8B.121 of the City Charter, the SFPUC has exclusive charge of certain assets, including without limitation, the City's real property under the SFPUC's jurisdiction, subject to applicable law.

Separately, the City Real Estate Division has the delegated authority to negotiate leases, purchases, sales, and exchanges of real property interests on behalf of City departments and agencies, subject to any and all necessary governmental approvals. Consistent with the Administrative Code, RES may seek assistance from the City Real Estate Division on various real estate matters. Such matters include leasing privately owned property, negotiating the purchase, sale, and exchange of any interest in real property, and determining fair market value and fair market rental rates. This collaboration with the City Real Estate Division shall not be deemed to limit the SFPUC’s exclusive jurisdiction over its assets under the City Charter.

When working with the City Real Estate Division, RES acts primarily as a liaison between the City Real Estate Division and the SFPUC. In such instances, the City Real Estate Division prepares documents and recommendations necessary for SFPUC and Board of Supervisors review and approval, as applicable, related to such real property matters.

1.6 Other Divisions Manage SFPUC Facilities

RES does not manage SFPUC offices, facilities, or field stations under the jurisdiction of NRLM, CDD, the Water Supply and Treatment Division, Hetch Hetchy, or the Wastewater or Power Enterprises. Typically, each enterprise manages its own facilities, sometimes in coordination with the City Real Estate Division.

SFPUC Real Estate Guidelines

2 Land Use

Through its Watershed Management Plans, the SFPUC has adopted specific land use policies for watershed lands. Other specific land use policies also apply to certain other lands under SFPUC jurisdiction, such as the Lake Merced Tract. See Exhibit 2. In 2012, the SFPUC adopted the Land Use Framework, available at http://sfwater.org/index.aspx?page=586.

The priority uses of SFPUC land are protecting the watershed and maintaining and operating utility infrastructure for the SFPUC's water, power, and sewer enterprises. Certain secondary uses by third parties on watershed land, ROW and other SFPUC property are allowed under lease or license agreements. Such secondary use may occur if RES, in consultation with the SFPUC enterprise having jurisdiction, determines that such use benefits the SFPUC and if such secondary use does not in any way interfere with, endanger, or damage existing or future SFPUC operations, security, or facilities.

The SFPUC disallows any use that:

- risks contamination of our land or water with hazardous materials;
- provides aerial utility crossing or overhead transmission lines within the ROW or watershed;
- cannot be removed promptly, to allow SFPUC construction, maintenance or emergency repairs of its facilities;
- fulfills another jurisdiction's open space, setback, parking, or third-party development requirements;
- makes the ROW the sole emergency access to a neighboring property;
- creates a regulatory compliance issue;
- includes installation of structures, trees or large shrubs on the ROW;
- would increase the SFPUC's potential liability or diminish the security of the SFPUC's utility infrastructure;
- includes installation of utilities, roads, fences, or other improvements parallel to, rather than across, SFPUC pipelines or electric transmission lines;
- includes the ROW as part of a transit-oriented development plan, dedicated rapid transit lane, or transit corridor; or
- is inconsistent with any existing or future SFPUC policies, as they may be amended or modified from time to time.

This list is not exhaustive. The SFPUC retains the right to disallow any use that, at the SFPUC's sole discretion, may interfere with, endanger or damage existing or future SFPUC operations, security, or facilities.

3 Lease and License Pre-Requisites

3.1 Forms and the City Attorney's Office

RES uses lease and license forms authorized by the Commission and approved by the City Attorney's Office (**CAO**), as amended from time to time. All leases and licenses use the appropriate form or ancillary form with modifications for special circumstances, as authorized by the Commission and approved by the CAO. Lease and license forms may have alternative clauses which RES analysts may negotiate. RES also uses consent letters and other real estate forms prepared by the CAO. The CAO must approve every agreement as to form before the SFPUC executes it. The General Manager, after CAO consultation, may negotiate and approve modifications to the forms, provided the modifications do not materially increase the City's liability or obligations or materially decrease the City's rights. RES consults with the CAO and the City Risk Manager, when appropriate, regarding material deviations from the lease and license forms. See Exhibit 1 for a list of current forms.

3.2 Tenant and Licensee Selection Guidelines

Consistent with the City's policy reflected in Chapter 23 of the City Administrative Code, all leases and licenses expected to produce more than $2,500 per month in revenue shall be awarded in accordance with competitive bidding requirements unless impractical or impossible, except as otherwise specifically approved by the Commission. Chapter 23 does not provide guidance on the circumstances that would make competitive bidding impossible or impractical, so that the General Manager or Acting General Manager in his or her reasonable judgment, must make that impossible or impractical determination, in light of City's policy in favor of receiving fair market rents. By adopting these Guidelines, the Commission has determined that the following are examples, but not an exhaustive list, of circumstances where competitive bidding is impractical or impossible: (i) where the location of a ROW parcel is such that it can only be used by an adjacent owner, operator, or tenant, so that it is reasonable to expect that a competitive bidding process would not attract multiple bidders; (ii) where many tenants lease space at one facility or site, such as a telecommunications tower; and (iii) when it is not cost-effective to engage in competitive bidding solicitations. The determination that competitive bidding would be impossible or impractical should be memorialized in a file memorandum.

Except in special circumstances as discussed in Sections 4 and 5, the SFPUC's goal is to obtain Fair Market Rent, as defined in Section 3.4.1. Any lease or license awarded without competitive bidding must be in an amount not less than the fair market value of the leased or licensed premises. If the SFPUC wishes to award a lease or license for less than Fair Market Rent, the SFPUC is required to make a finding of the public purpose to be served by such lease or license. Such finding and the license or lease is subject to the prior approval of the Commission, the General Manager, and any other applicable governing body.

RES also evaluates applicants based on the proposed use of the SFPUC parcel. Uses must be compatible with the SFPUC's municipal utility mission and not interfere with, endanger, or damage existing or future SFPUC operations, security, or facilities. Proposed uses must be consistent with the SFPUC's land use policies discussed in Section 2, including those policies expressed in the SFPUC's Watershed Management Plans, Interim SFPUC Water Pipeline Right

of Way Use Policy for San Mateo, Santa Clara and Alameda Counties, Right of Way Integrated Vegetation Management Policy, and Land Use Framework. RES also evaluates and verifies each applicant's financial qualifications and other information. RES' criteria for due diligence, applicant financial qualifications, and entity approval are stated in the internal RES Operating Manual. RES must approve such applicant information prior to making any commitment to commence negotiations for a lease or license, the final form of which remains subject to applicable governmental approvals.

3.3 Economic Terms

RES calculates processing and use fees, rent, and security deposits as stated below:

SUMMARY OF BASIC BUSINESS TERMS FOR AGREEMENTS	
Lease Processing Fee	Minimum of $3,000, subject to adjustment (Section 8.1)
License Processing Fee	Minimum of $2,000, subject to adjustment (Section 8.1)
	Minimum of $750 if issued to a Public Agency or Nonprofit Organization with a Charitable Purpose
Processing Fee for Lease Amendments, Assignments or Renewals	Minimum of $1,000
Rent or Use Fee	Fair Market Rent, except in special cases (see Sections 3.4.2, 4.4.1, 4.4.2, and 5.3)
Adjustments to Rent	Four percent (4%) annual increase, unless nominal rent or special case exception (Sections 4.1 and 5.2)
Security Deposit	Minimum of two months' rent/use fee, subject to adjustment (Section 5.2)
Property Taxes	Tenant or Licensee reimburses the SFPUC for 100% of the property taxes and assessments applicable to the leased or licensed premises

The Real Estate Director may waive or reduce a processing fee in certain limited circumstances: (a) for a renewing tenant or licensee or (b) upon a showing of benefit to SFPUC and written approval by the General Manager or Acting General Manager. In addition to a processing fee, RES may charge for staff and attorney time involved in preparation and approval of real estate agreements.

3.4 Guidelines for Determining Rent for Leases and Licenses

3.4.1 Fair Market Rent Determination

RES determines fair market rent for the leases it issues (and fair market use fees in the case of

licenses) (**Fair Market Rent**), except in certain specified cases as explained below.

a. Market Approach to Value

RES uses the market approach to value to determine Fair Market Rent for income-producing property where appropriate.

RES determines Fair Market Rent by analyzing rental rates in comparable transactions or other available market data through the use of real estate databases or by consulting with commercial real estate brokers, appraisers, or other experts.

b. Income Approach to Value

In the case of any lease or license on the pipeline ROW or for other SFPUC property where finding comparable transactions is difficult, RES establishes Fair Market Rent by using the income approach to value.

This method translates land values into a lease or license rate:

Lease/License Area **X** Fee Value of the Land **X** Expected Rate-of-Return (for the market area) = Lease or License Rate

c. Discount for Pipeline Right of Way

The SFPUC sometimes may discount the rental rate to compensate for limited use of the leased or licensed property due to the presence of underground or other facilities that impede use. Some properties are not discounted if the presence of SFPUC infrastructure does not impact the highest and best use of the property.

d. Reserved Rights Adjustment to Value

SFPUC property is sometimes encumbered by an easement, or by rights reserved in the deed by which the SFPUC originally acquired title. In any such case, a rental rate may be further adjusted after reviewing the proposed use and existing deed rights, as appropriate. Use rights such as agriculture, roadways, and utility crossings that were expressly reserved to the original grantor and its successors or assigns and that are exercised in a manner consistent in purpose, scope, and intensity of use with the express language of the deed may result in a Fair Market Rent discount in connection with the valuation process.

e. MAI Appraisal

An applicant, at its sole cost, may also obtain an appraisal by an MAI appraiser to determine Fair Market Rent for a property. The SFPUC is not bound by the appraisal and in many cases, may order an MAI appraisal, at its sole cost or with the applicant's participation, to confirm the true rental value of a property.

f. Consultation with the City Director of Property

In keeping with the City's policy of achieving greater consistency and coordination in the City's leasing practices, RES submits any proposed license or lease having a term (including any extension option(s)) of five years or longer, or anticipated revenue of more than $500,000 over such term, to the City's Director of Property for review and advisory recommendations before final approval of the lease or license. In such cases, RES also requests that the Director of Property evaluate Fair Market Rental rates to aid and assist in negotiating, extending, or renewing the lease or license.

3.4.2 Nominal Value Rentals

It is often difficult to determine the Fair Market Rental rate of some SFPUC parcels due to their zoning, irregular size or shape, location, or limited potential use. Nominal rent is the SFPUC's designated estimate of fair market value for these very specific instances. Properties determined to have nominal value are typically used by tenants or licensees for temporary access, driveway access, landscaping, agricultural, or temporary construction staging purposes (for SFPUC construction projects only).

Many vacant parcels that have little or no income-producing potential require annual expenditures by the SFPUC for weed abatement and trash removal. These maintenance obligations can be passed on to tenants or licensees under nominal rent leases or licenses, relieving the SFPUC of such costs. Land uses under nominal rent lease or license agreements must be strictly limited to preclude uses that could negatively affect the value of the land, or result in a regulatory enforcement action against SFPUC as landowner. The Real Estate Director determines if a proposed lease or license meets the criteria for a nominal rent agreement and approves all nominal rental rate determinations. Nominal rent is presently defined as a $2,400 per year or $200 per month. The General Manager or Acting General Manager is authorized to approve nominal rent leases and licenses for agreements having a term up to five years.

3.5 Project Review

The SFPUC reviews most proposed uses of SFPUC land through project review committees. The In-City Project Review Committee, which usually meets twice monthly, reviews all in-City proposals. The Project Review Committee, which typically meets twice monthly, reviews all proposals for use of SFPUC lands outside of San Francisco in the Bay Area. Representatives of several internal divisions attend the meetings to review projects through this process, vetting proposals for environmental compliance, infrastructure conflicts, and real estate issues.

3.6 Insurance

3.6.1 Insurance and Indemnity Requirements

The City Risk Manager, after CAO consultation, determines the insurance and indemnity requirements in the standard lease and license forms approved by the CAO. Accordingly, RES makes any material variations from these requirements only after consulting the CAO and obtaining City Risk Manager approval. RES should also consult with the SFPUC Risk Manager to determine if additional insurance is needed in a lease or license in light of the particular proposed use and location, or if waiver of a particular insurance requirement is warranted.

With the exception of employee housing, prior to taking occupancy, each tenant and licensee must show a certificate of insurance and endorsements evidencing the insurance required by its lease or license.

Each tenant and licensee must be insured during the entire term of occupancy, subject to Section 3.6.2.

3.6.2 Self-Insurance by Tenants and Licensees

Some large corporations and public entities regularly self-insure. If an applicant asks to meet the City insurance requirements by self-insuring, RES requests documentation from the applicant

showing that the applicant regularly self-insures and has adequate assets. If such requirements are satisfied, RES obtains written concurrence from the City Risk Manager. The insurance section of the lease or license may be amended as appropriate, subject to review and approval by the City Risk Manager, after CAO consultation.

3.7 CEQA Clearance

Before deciding to issue a lease or license agreement, the SFPUC must determine if the California Environmental Quality Act (CEQA) applies to the proposed agreement, and if so, verify compliance. RES coordinates with the SFPUC's Bureau of Environmental Management (BEM) to confirm that all appropriate environmental analysis and approvals have occurred.

4 Leasing Policies (City as Landlord)

4.1 Lease Approvals, Fees, and Security Deposits

The Commission has the sole authority to approve all leases for use of SFPUC lands, subject however, to any additional approvals by the City Board of Supervisors and Mayor required by the City Charter. The Commission has delegated certain approval authority to the General Manager, and in certain instances, authorized the General Manager to act through an Acting General Manager. See Section 6 for more information on lease approvals.

Processing fees for leases issued by RES are stated in Section 3.3. The Real Estate Director is responsible for reviewing the fee schedule annually and adjusting the fees, as appropriate, subject to Commission approval. Generally, security deposits equal two months' rent or the fair market value of two months' use of the property. The Real Estate Director may increase the amount required in a specific lease, depending on the proposed use of the property.

Rent generally increases four percent annually during the term.

4.2 Lease Execution

Generally, the General Manager or Acting General Manager executes all income-producing leases on the SFPUC's behalf, except for employee housing.

The SFPUC leases residential housing to certain Watershed and Water Supply and Treatment Division employees. The Real Estate Director executes all employee residential leases.

4.3 Approval of Lease Amendments and Assignments

The requisite approval for lease amendments and assignments is determined on a case-by-case basis, evaluated on the terms of the original lease and the terms of the proposed lease amendment or assignment. If the original lease required Commission and/or Board of Supervisors approval, the lease amendment or assignment will likely require the same.

4.4 Special Cases

4.4.1 The Southeast Community Facility

To balance the effects of the legally required expansion of the Southeast Water Pollution Control Plant in the mid-1970s, the City provided mitigation in the form of a commercial greenhouse and skills-training center. Drawing on the support of the citizens of the Bayview-Hunters Point area, the City elected to construct a greenhouse and a multipurpose "Skills Center" facility providing skills-training, education, child and senior daycare programs, and community meeting facilities to offset the adverse impacts of the sewage treatment plant on the neighborhood. Thus, the Southeast Community Facility (**SECF**), located at 1800 Oakdale Avenue, San Francisco, and the greenhouses, located at 1150 Phelps Street, San Francisco, were built in or about 1986. The SFPUC operates the SECF and the adjacent greenhouse, regardless of revenues generated or expenses incurred, to mitigate effects on the surrounding community arising from the construction and operation of the Southeast Water Pollution Control Plant.

4.4.2 Cottage Leases

Certain provisions of cottage leases to Watershed Keepers and Watershed Keeper Supervisors are governed by the SEIU Local 1021 MOU, as amended from time to time.

5 Licensing Policies (City as Licensor)

5.1 General

In general, RES issues licenses allowing improvements on SFPUC property for uses such as roads, public parks, surface utility installations, long-term subsurface utility installations, parking, landscaping and agriculture. RES also issues licenses for temporary surface uses such as construction staging. All licenses are revocable, and most are revenue-generating.

In the past, the Commission has allowed discounted rent to public agencies and nonprofit organizations in certain circumstances, subject however to any applicable governmental approvals. Due to the increased development pressures in the Bay Area, SFPUC lands have become increasingly attractive to public agencies, private developers and others for recreation, parking, landscaping and other uses. Discounted use fees are not available when an applicant seeks to use SFPUC property to satisfy any open space or other entitlement condition of a local jurisdiction or for commercial or revenue-generating purposes. In such circumstances, the license agreement must charge Fair Market Rent.

5.2 License Approvals, Fees, and Security Deposits

Approval requirements for RES-issued licenses are stated in Section 6. Processing fees for such licenses are stated in Section 3.3. The Real Estate Director is responsible for reviewing the fee schedule annually and adjusting the processing fees, as appropriate, subject to Commission approval. In license agreements, the periodic rent is called a “use fee.” Generally, security deposits equal two months’ use fee or the fair market value of two months’ use of the property. The Real Estate Director may increase the amount of security deposit required, depending on the proposed use of the property.

Use fees generally increase four percent annually during the term.

Some licenses may not fit neatly into one of the categories in Section 6. In such cases, the SFPUC seeks to obtain Fair Market Rent; otherwise Commission approval may be required as stated in Section 6. A public agency or nonprofit organization that may ordinarily qualify for a discounted use fee may opt to pay Fair Market Rent in accordance with Sections 5.3.1(b) and 5.3.2(b) below.

5.3 Special Cases

5.3.1 Licenses Issued to Public Agencies

a. Licenses Issued on a Discounted or Rent-Free Basis

RES may issue a revocable license to a public agency on a discounted or rent-free basis, subject to the criteria described below. Any such license must meet the requirements described in Section 3, other than Fair Market Rent, and all such licenses require approval by the Commission, and if applicable, the City’s Board of Supervisors and Mayor, each in their respective sole discretion.

SFPUC Real Estate Guidelines

The SFPUC defines "public agency" as any city, county, state or federal entity, including water districts.

1. The licensed property must:
   - have little or no revenue-generating potential;
   - be located within the boundaries of the city, county or district if a city, county or district is the license applicant;
   - be fully maintained and repaired by the licensee under the terms of the license agreement;
   - not be desired by more than one applicant; otherwise the licensee must pay full Fair Market Value; and
   - not be proposed for any of the following uses, each of which is a restricted use (each a **Restricted Use,** and collectively **Restricted Uses**):
     - use primarily intended to satisfy any open space or entitlement condition of a local jurisdiction;
     - use paid for by fee paid in lieu of dedication of open space, parks or other dedication to satisfy an entitlement condition;
     - use for transit purposes;
     - use for emergency access; or
     - use for any profit-generating activity.

Finally, the license must benefit the SFPUC's primary utility purposes.

If the applicant cannot meet these criteria or plans to use SFPUC land for a Restricted Use, the standard license policy applies, and RES may consider issuing a license at the Fair Market Rate or for receipt of adequate substitute consideration.

Any such license must be conferred by way of a revocable license only on a CAO-approved standard form, and each and every license remains subject to any applicable governmental approvals.

2. License fees are as follows:
   - The SFPUC must charge a minimum processing fee of $750 for all licenses issued to public agencies, subject to Section 8.1;
   - The licensee must pay directly or reimburse the SFPUC for 100% of the licensee's pro rata share of property taxes and similar assessments;
   - The SFPUC will not charge any use fee for non-Restricted Uses;
   - For other non-Restricted Uses, a discounted fee of up to 50% of the value of the land or improvement multiplied by the appropriate rate of return or adequate substitute consideration.

The SFPUC prefers projects that do not require SFPUC maintenance, present a low risk of liability, enhance community relations, or benefit SFPUC operations and capital improvement programs.

The discounted rate does not apply when a public agency seeks to use SFPUC property to enhance or mitigate the effects of private development or for any commercial or revenue-generating activity (other than for municipal utility purposes).

3. Approval Authority

Licenses issued to public agencies at a discounted rate require Commission approval through the Consent Calendar. However, a public agency may request a license issued at Fair Market Rent in accordance with Section 5.3.1(b) below. Any such license must meet the requirements described in Section 3.

b. Licenses Issued at Fair Market Rent

If a public agency agrees to pay Fair Market Rent, the license term is up to five years and total anticipated revenue over the term of the license is less than $300,000, the General Manager or Acting General Manager is authorized to execute the license.

5.3.2 Licenses Issued to Nonprofit Organizations Having a Charitable Purpose

a. Licenses Issued on a Discounted or Rent-Free Basis

RES may issue a revocable license for property to a nonprofit organization having a charitable purpose at a discounted rate, provided that the applicant meets the criteria described below, subject however, to all applicable governmental approvals in each instance:

1. The licensed property must:
   - have little or no profit-generating potential;
   - be fully maintained and repaired by the licensee under the terms of the license;
   - not be desired by more than one applicant, otherwise the licensee must pay full Fair Market Value; and
   - not be proposed for any use designed to satisfy any local jurisdiction's open space or entitlement requirement or for any commercial or revenue-generating activity.

Finally, the license must benefit the SFPUC's primary utility purposes.

Any such license must meet the requirements described in Section 3, other than Fair Market Rent, and is subject to any applicable governmental approvals.

If the applicant cannot meet these criteria, the standard license policy applies, and RES will only issue a license at Fair Market Rent, subject to any applicable competitive bidding requirements.

2. License fees are as follows:
   - The SFPUC must charge a minimum processing fee of $750 for all licenses issued to nonprofit organizations, subject to Section 8.1;
   - The licensee must pay directly or reimburse the SFPUC for 100% of the licensee's pro rata share of property taxes and similar assessments;
   - A discounted use fee of up to 50% of the value of the land or improvement multiplied by the appropriate rate of return

3. Approval Authority

Any license issued to a nonprofit organization with a charitable purpose at a discounted rate requires Commission approval on the Consent Calendar. However, a nonprofit organization may request a license issued at Fair Market Rent in accordance with Section 5.3.2(b) below. Any such license must meet the requirements described in Section 3.

4. The nonprofit organization must fit within the eligibility requirements:

This policy is intended to grant a discount to nonprofit organizations where the proposed use and terms of any particular license provide a benefit to SFPUC's municipal utility purposes. Not all nonprofit organizations fall within this category, and therefore the following guidelines should be used when determining whether to grant a discount.

The SFPUC prefers projects that do not require SFPUC maintenance, present a low risk of liability, enhance community relations, or benefit SFPUC operations and capital improvement programs.

This policy provides guidance, but cannot address every conceivable situation that may arise. Thus, the SFPUC determines on a case-by-case basis whether an organization and its proposed use qualify for a discounted rate, within reasonable discretion. No nonprofit organization is automatically entitled to a discounted rate, but the Commission intends that this policy be implemented in a fair and non-discriminatory manner.

When the discounted rate applies:

- The discounted rate applies only to those nonprofit organizations that advance charitable purposes for the general public and intend to use the land to further that charitable purpose; and where the use benefits the SFPUC's primary utility purposes.
- To qualify for consideration, the organization must be certified as a nonprofit organization under state and federal law and must provide evidence of such certification to RES, along with copies of any organizational documents or other documents requested by RES to demonstrate the organization's charitable purpose.

When the discounted rate does not apply:

- The discounted rate does not apply to any organization that discriminates against persons or groups for any reason whatsoever in violation of applicable law or City policy.
- The discounted rate does not apply to any nonprofit organization that uses SFPUC land or adjacent land for any commercial or revenue-generating activity. In other words, a nonprofit organization that owns or leases commercial or retail property on adjacent land is not eligible for a discount.
- The discounted rate does not apply where the nonprofit organization's use of SFPUC land does not benefit the SFPUC's primary utility purposes.
- In addition, no discount is given to any nonprofit organization that charges individuals for parking or other uses of SFPUC land without the prior approval of the Commission, and if applicable, the City's Board of Supervisors and Mayor.

b. Licenses Issued at Fair Market Rent

The General Manager or Acting General Manager is authorized to approve a license when a nonprofit organization having a charitable purpose agrees to pay Fair Market Rent, the license term is five years or less and total anticipated revenue over the term of the license is $300,000 or less. Any such license must meet the requirements described in Section 3.

5.3.3 Right of Way Encroachment Permits

It is vitally important that the SFPUC protect its Water, Power and Wastewater facilities from damage and ensure immediate access to all facilities for maintenance, repair, and replacement. Increased urbanization and development around the water transmission ROW in particular have led to an increase in the number of ROW encroachments. Encroachments are permitted only

SFPUC Real Estate Guidelines

where the uses provide identifiable benefits to the SFPUC, as determined by the SFPUC Water Enterprise and RES. The Real Estate Director approves uses found consistent with existing SFPUC policy and issues the requisite Encroachment Permit in accordance with the SFPUC Right of Way Encroachment Policy. The Right of Way Encroachment Policy, adopted through Resolution No. 99-0252, as amended by Resolution No. 07-0027, may be found online at http://www.sfwater.org/index.aspx?page=183.

a. Encroachment Permits for Bisected Parcels and Parcels Lacking Access

SFPUC's Right of Way Encroachment Policy defines a "bisected" parcel as a private residential lot adjacent to the ROW, where the adjacency either results in an irregular parcel size or shape or adversely affects access to the parcel. A parcel lacking access cannot connect to a public road or walkway without crossing the ROW. If appropriate, RES may issue a permit to the encroaching party requiring the encroaching party to:

1. Pay a use fee of $125 per year for occupancy for a term of up to five years;
2. Indemnify the City against third-party claims related to the permittee's negligence or misconduct;
3. Pay any applicable property taxes and assessments and provide insurance; and
4. Inform the new owner of the encroachment if the bisected parcel is sold. The new owner may be given the opportunity to enter into a similar permit.

Such encroachment permits are issued on a form of Revocable Permit developed by the CAO specifically for bisected parcels. Other requirements and special administrative procedures for the negotiation of an encroachment permit for a bisected parcel may be found in the SFPUC Right of Way Encroachment Removal Policy.

b. Municipal Uses

Unpermitted municipal uses, landscaping, or improvements may be eligible for an encroachment permit to allow continuing use. Any encroachment permit issued to a municipality will:

1. Determine which party will bear the cost of removal and replacement of municipal improvements;
2. Allow for continuing use;
3. Include provisions allowing the SFPUC to take appropriate measures to maintain erosion control and address the aesthetic appearance of its ROW; and
4. Be issued on SFPUC's standard form license agreement with modifications authorized as described in Section 3.1.

c. Neighborhood Groups

Neighborhood groups sometimes landscape portions of the SFPUC ROW. Any encroachment permit issued to a neighborhood group to allow continuing use must:

1. Be signed by a preapproved financially responsible legal entity in good standing;
2. Require a use fee of $125 per year for occupancy for a term of up to five years;
3. Require that the permittee indemnify the City against third-party claims related to the permittee's negligence or misconduct;
4. Require that the permittee pay any applicable property taxes and assessments and provide insurance;
5. Determine which party will bear the cost of removal and replacement of such landscaping; in the event that SFPUC removes it or requires its removal;

6. Allow ornamental landscaping compatible with the Vegetation Management Policy;
7. Require the permittee to provide insurance;
8. Place responsibility for all landscaping installation and maintenance on the permittee; and
9. Be issued on SFPUC's standard form license agreement with modifications authorized as described in Section 3.1.

See the SFPUC Encroachment Removal Policy, available at http://www.sfwater.org/index.aspx?page=183, for more information regarding encroachment permits.

5.3.4 SFPUC Contractors

The General Manager or Acting General Manager may approve licenses to and waive rent for SFPUC contractors needing space in connection with the projects they perform for SFPUC, on a case-by-case basis.

5.3.5 Memoranda of Understanding with Other City Departments

The SFPUC sometimes negotiates MOUs with other City departments regarding the use of SFPUC property. Any rent-free MOU for use of SFPUC property where there is no jurisdictional transfer requires Commission approval on the Consent Calendar. For any MOU where another City department pays Fair Market Rent, see Section 6.1's Fair Market Rent section for approval requirements.

In any case of an MOU between the SFPUC and another City department in which there is a jurisdictional transfer, Commission and Board of Supervisors approval is required.

6 Agreement Approvals

Approvals required for any particular City as landlord lease or license will be determined on a case-by-case basis, in accordance with City's Charter, Administrative Code and applicable law. For reference, the following charts provide guidance as to the approvals generally required for City as landlord leases and licenses.

6.1 General Agreement Approval Authority

	REAL ESTATE AGREEMENT APPROVALS	
	City as Landlord (Leases and Licenses)	
At Fair Market Rent	Agreement with total anticipated revenue of $1 million or more over the term (including options to renew)	Regular Calendar and Board of Supervisors
	Agreement with term of 10 years or more (including options to renew)	Regular Calendar and Board of Supervisors
	Agreement with total anticipated revenue under $1 million and above $300,000 over the term, and/or with a term less than 10 years and more than 5 years (including options to renew)	Consent Calendar
	Agreement with total anticipated revenue of $300,000 or less over the term, and term of 5 years or less (including options to renew)	General Manager or Acting General Manager
Below Fair Market Rent	Agreement with total anticipated revenue of $1 million or more over the term (including options to renew)	Regular Calendar and Board of Supervisors
	Agreement with term of 10 years or more (including options to renew)	Regular Calendar and Board of Supervisors
	Agreement with total anticipated revenue less than $1 million over the term and a term less than 10 years (including options to renew)	Consent Calendar
Special Cases	One-time Revocable License with term of five years or less where the property valuation is impractical or impossible due to the configuration of the SFPUC property or other circumstances, or the use is limited (e.g., construction staging for SFPUC contractors or equipment storage) and valuation will not exceed $2,500 per month	General Manager or Acting General Manager

	REAL ESTATE AGREEMENT APPROVALS	
	City as Landlord (Leases and Licenses)	
Special Cases	SFPUC Employee Housing Lease	Real Estate Director
	Encroachment Permit for Bisected Parcel, with a term of 5 years or less, including options to renew	Real Estate Director
	Other Encroachment Permits (which are issued on SFPUC's standard license agreement form)	See the applicable category under "At Fair Market Rent" or "Below Fair Market Rent" above
	Nominal value rentals under Section 3.4.2	General Manager or Acting General Manager
	Revocable licenses to SFPUC contractors needing space in connection with the projects they perform for the SFPUC	General Manager or Acting General Manager
	MOU with City department below Fair Market Rent where there is no jurisdictional transfer	Consent Calendar
	MOU with City department at Fair Market Rent where there is no jurisdictional transfer	See the applicable category under "At Fair Market Rent"

6.2 Approval Authority for Agreements Issued to Public Agencies and Nonprofit Organizations with a Charitable Purpose

	AGREEMENTS ISSUED TO PUBLIC AGENCIES AND NONPROFIT ORGANIZATIONS WITH A CHARITABLE PURPOSE	
	City as Landlord	
At Fair Market Rent	Agreement with term of 5 years or less and total anticipated revenue of $300,000 or less over the term (including options to renew)	General Manager or Acting General Manager
	Agreement with total anticipated revenue under $1 million and above $300,000 over the term, and/or with a term less than 10 years and more than 5 years (including options to renew)	Consent Calendar

	AGREEMENTS ISSUED TO PUBLIC AGENCIES AND NONPROFIT ORGANIZATIONS WITH A CHARITABLE PURPOSE	
	City as Landlord	
Discounted Use Fee	Revocable License issued to a public agency or nonprofit organization for park, recreation, or landscaping purposes where SFPUC property will not be used to satisfy any private property entitlement condition or for any commercial or revenue-generating activity	Consent Calendar
	Revocable License issued for any other use where SFPUC property will not be used to satisfy any private property entitlement condition or for any commercial or revenue-generating activity	Consent Calendar

6.3 General Manager's Discretion

The General Manager retains full discretion to submit any agreement to the Commission for approval even if Commission approval may not be required under the above criteria.

6.4 Lease and License Reporting

RES shall provide notices and reports of all SFPUC leases and licenses in accordance with City Charter and Administrative Code requirements.

7 SFPUC as Tenant or Licensee

7.1 Approval and Execution Authority

The SFPUC General Manager or Acting General Manager, after CAO consultation, has the authority to approve and execute certain agreements described in Section 7.2, below. If authorized by the Commission, subject to specific criteria identified to guide the decision, the General Manager may exercise the delegated power through the Acting General Manager.

The SFPUC also negotiates MOUs with other City departments regarding SFPUC use of other City properties. Where no jurisdictional transfer occurs and expected expenditures are $5,000 or less per month, with a term of five years or less, the General Manager, or Acting General Manager, may approve such MOUs. Also, the General Manager or Acting General Manager may approve MOUs allowing use of other City properties by the SFPUC for infrastructure, including MOUs allowing street vacations where the City will continue to own the property. Where no jurisdictional transfer occurs and expected expenditures exceed $5,000 per month and/or the term is greater than 5 but less than 10 years, the Commission shall approve such MOUs on its Consent Calendar.

7.2 Lease and License Types

REAL ESTATE AGREEMENT APPROVALS	
City as Tenant or Licensee	
Agreement with total Anticipated Expenditures of $10 Million or more over the term (including options to renew)	Regular Calendar and Board of Supervisors
Agreement with term of 10 years or longer (including options to renew)	Regular Calendar and Board of Supervisors
Agreement with total anticipated expenditures of more than $300,000 and less than $10 Million over the term (including options to renew)	Regular Calendar
Agreement with term of more than 5 and less than 10 years (including options to renew)	Regular Calendar
Agreement with anticipated expenditures of $300,000 or less and term of 5 years or less (including options to renew)	General Manager or Acting General Manager
MOU with City department with anticipated monthly expenditures paid by SFPUC of more than $5,000, with no jurisdictional transfer	Consent Calendar

SFPUC Real Estate Guidelines

REAL ESTATE AGREEMENT APPROVALS	
City as Tenant or Licensee	
MOU with City department with anticipated expenditures paid by SFPUC of $5,000 or less per month, with no jurisdictional transfer	General Manager or Acting General Manager
MOU with City department for SFPUC infrastructure (e.g., continuing SFPUC use following street vacation), with no jurisdictional transfer	General Manager or Acting General Manager

PAGE 21

8 Rental Accounting

When appropriate, the Real Estate Director may exercise the authority to waive processing fees, holdover rent provisions (to the extent they double or triple the rent), and late fees related to such extraordinary escalations in any agreement based on continuing good faith negotiations or other unforeseen circumstances that result in the agreement remaining in holdover status through no fault of the tenant or licensee. The monthly rent or use fee, including annual escalations and all other terms and conditions of the lease or license are still enforced when in holdover status.

8.1 Processing Fees

The Real Estate Director may waive or reduce a processing fee as follows: (a) for a renewing tenant or licensee or (b) upon a showing of benefit to SFPUC and written approval by the General Manager or Acting General Manager. RES may charge applicants for staff and attorney time involved in preparation and approval of leases and licenses.

8.2 Late Fees and Grace Periods

Upon written application from a tenant or licensee and a demonstration by such tenant or licensee of its ability to promptly cure any arrearages, the Real Estate Director may extend in writing up to two grace periods for payment of rental or use fees and waive collection of up to two late payment fees for a tenant or licensee during any given calendar year of the lease or license, up to a maximum annual amount of $5,000.

The Real Estate Director may not approve any further grace periods or late fee waivers for a tenant or licensee without the prior written consent of the General Manager or Acting General Manager. Except as provided in Section 8.2, neither the Real Estate Director nor the General Manager shall be authorized to waive payments of past due rent without Commission approval, and if applicable, Board of Supervisors approval.

8.3 Employee Housing Rent Credits

The Real Estate Director may issue a rent credit for maintenance or repairs performed by a tenant where the work is considered the landlord's obligation under the applicable lease, subject to the following criteria:

1. The Real Estate Director, in conjunction with the Water Supply and Treatment Division, must approve the rent credit in writing in advance of the work;
2. Once the tenant completes the approved work to SFPUC's reasonable satisfaction (including inspection of the work), it must submit to RES a written request for a rent credit and a paid invoice or receipt verifying the maintenance or repair work in the amount of the rent credit requested, all within 12 months of completion of the work;
3. The amount of the rent credit issued may not exceed the sum of three months' rent;
4. The Real Estate Director must apply the rent credit against the next installments of rent due;
5. At no time shall any rent credit extend beyond the term of the lease; and
6. The Real Estate Director shall approve any rent credit in writing, prior to any such rent

credit taking effect.

8.4 Southeast Community Facility Rent Offsets

The General Manager, or Acting General Manager, has authority to provide offsets for rent at the SECF for improvements and repairs performed by a tenant or licensee where the work is considered the landlord's obligation under the applicable lease or license at the SECF, subject to the following criteria:

1. The tenant or licensee can provide such repair at a lower cost or more cost-efficiently; and
2. The SECF Executive Director, the Real Estate Director and the Wastewater Enterprise AGM or his or her designee approve such offset in writing in advance of such repairs.

8.5 Capital Project-Induced Rent Credits

The issuance of a rent credit to a tenant or licensee to facilitate SFPUC or its contractors' operations during an SFPUC capital project, may be preferable in lieu of other compensation for the tenant or licensee's accommodation. The General Manager, or Acting General Manager, may approve in writing the issuance of a rent credit to a tenant or licensee to facilitate SFPUC operations during an SFPUC capital project, in lieu of providing other compensation, provided that the amount of the rent credit shall not exceed the lesser of (a) three months' rent or (b) $10,000. Commission approval is required for any additional rent credit or rent waiver. Any rent credit issued to settle a tenant claim is subject to the City Administrative Code provisions governing claims.

8.6 Grazing Tenant Long-Term Maintenance Rent Credits

The SFPUC is landlord to a number of grazing tenants. NRLM manages the land subject to these grazing leases. All grazing leases permit the tenant to receive a credit against the next installment of annual base rent for its actual costs incurred in satisfactorily performing long-term maintenance upon the leased premises. Presently, these leases provide that the total amount of the credit for any such tenant shall not exceed fifty percent (50%) of the current annual base rent. Each tenant must provide NRLM and RES with written documentation of such costs before NRLM and the Real Estate Director will approve such rent credits.

9 Easement Agreements

If the Commission authorizes the grant of an easement to a third party on SFPUC lands, RES negotiates and documents the easement and acts as a liaison between the SFPUC and the City Real Estate Division regarding the approval of the easement by the City's Board of Supervisors and Mayor. RES charges a minimum $2,500 processing fee and may additionally charge for staff and administrative costs, including attorney's fees and costs and any other fees charged by other City departments, for each such agreement. RES may also require the grantee to pay costs associated with obtaining any necessary City General Plan Referral.

10 Conclusion

These Guidelines steer the Real Estate Director and analysts in daily operations. RES updates its Operating Manual, for internal use, from time to time incorporating the decisions approved by the Commission and expressed in these Guidelines. Any future changes to the Operating Manual will also be made in light of the Guidelines promulgated herein.

The Operating Manual includes detailed information regarding leasing and licensing procedures, RES best practices, lease and license term enforcement, delinquent accounts and procedures to improve interdivision communication in the leasing and licensing process.

Please direct any questions regarding the implementation of these Guidelines to SFPUC Real Estate Services at (415) 487-5210 or RES@sfwater.org.

Exhibit 1: City Attorney's Office-Approved Lease and License Forms

1. Cell Site Lease Form
2. Ground Lease Form
3. Revocable License Form (SFPUC as Licensor)
4. Employee Housing Lease Form
5. Consent Letter Form

Note: All City Attorney's Office-Approved Forms are on file with the SFPUC Commission Secretary.

Exhibit 2: SFPUC-Approved Land Use Policies

1. Watershed Management Plans
2. Land Use Framework
3. Interim SFPUC Water Pipeline Right of Way Use Policy for San Mateo, Santa Clara and Alameda Counties
4. Right of Way Integrated Vegetation Management Policy

Note: All SFPUC land use policies may be amended from time to time.

Hetch Hetchy
Regional Water System
Services of the San Francisco Public Utilities Commission

SFPUC Interim Water Pipeline Right of Way Use Policy for San Mateo, Santa Clara, and Alameda Counties

Approved January 13, 2015

by

SFPUC Resolution No. 15-0014

as an amendment to the SFPUC Real Estate Guidelines

SFPUC Water Pipeline Right of Way Use Policy for San Mateo, Santa Clara, and Alameda Counties

As part of its utility system, the San Francisco Public Utilities Commission (SFPUC) operates and maintains hundreds of miles of water pipelines. The SFPUC provides for public use on its water pipeline property or right of way (ROW) throughout Alameda, Santa Clara, and San Mateo counties consistent with our existing plans and policies. The following controls will help inform how and in which instances the ROW can serve the needs of third parties—including public agencies, private parties, nonprofit organizations, and developers—seeking to provide recreational and other use opportunities to local communities.

Primarily, SFPUC land is used to deliver high quality, efficient and reliable water, power, and sewer services in a manner that is inclusive of environmental and community interests, and that sustains the resources entrusted to our care. The SFPUC's utmost priority is maintaining the safety and security of the pipelines that run underneath the ROW.

Through our formal Project Review and Land Use Application and Project Review process, we may permit a secondary use on the ROW if it benefits the SFPUC, is consistent with our mission and policies, and does not in any way interfere with, endanger, or damage the SFPUC's current or future operations, security or facilities.[1] No secondary use of SFPUC land is permitted without the SFPUC's consent.

These controls rely on and reference several existing SFPUC policies, which should be read when noted in the document. Being mindful of these policies while planning a proposed use and submitting an application will ease the process for both the applicant and the SFPUC. These controls are subject to change over time and additional requirements and restrictions may apply depending on the project.

The SFPUC typically issues five-year revocable licenses for use of our property, with a form of rent and insurance required upon signing.[2]

Note: The project proponent is referred to as the "Applicant" until the license agreement is signed, at which point the project proponent is referred to as the "Licensee."

[1] SFPUC Guidelines for the Real Estate Services Division, Section 2.0.
[2] SFPUC Guidelines for the Real Estate Services Division, Section 3.3.

I. *Land Use, Structures, and Compliance with Law*

The following tenets govern the specifics of land use, structures, and accessibility for a project. Each proposal will still be subject to SFPUC approval on a case-by-case basis.

A. SFPUC Policies. The Applicant's proposed use must conform to policies approved by the SFPUC's Commission, such as the SFPUC's Land Use Framework (http://sfwater.org/index.aspx?page=586).

B. Americans with Disabilities Act Compliance. The Applicant must demonstrate that a Certified Access Specialist (CASp) has reviewed and approved its design and plans to confirm that they meet all applicable accessibility requirements.

C. Environmental Regulations. The SFPUC's issuance of a revocable license for use of the ROW is subject to compliance with the California Environmental Quality Act (CEQA). The Applicant is responsible for assessing the potential environmental impacts under CEQA of its proposed use of the ROW. The SFPUC must be named as a Responsible Agency on any CEQA document prepared for the License Area. In addition, the Applicant shall provide to SFPUC a copy of the approved CEQA document prepared by the Applicant, the certification date, and documentation of the formal approval and adoption of CEQA findings by the CEQA lead agency. The SFPUC will not issue a license for the use of the ROW until CEQA review and approval is complete.

D. Crossover and Other Reserved Rights. For a ROW parcel that bisects a third party's land, the Applicant's proposed use must not inhibit that party's ability to cross the ROW. The Applicant must demonstrate any adjoining owner with crossover or other reserved rights approves of the proposed recreational use and that the use does not impinge on any reserved rights.

E. Width. The License Area must span the entire width of the ROW.
   - *For example, the SFPUC will not allow a 10-foot wide trail license on a ROW parcel that is 60 feet wide.*

F. Structures. Structures on the ROW are generally prohibited. The Licensee shall not construct or place any structure or improvement in, on, under or about the entire License Area that requires excavation, bored footings or concrete pads that are greater than six inches deep.

   i. Structures such as benches and picnic tables that require shallow (four to six inches deep) cement pads or footings are generally permitted on the ROW. No such structure may be placed directly on top of a pipeline or within 20 feet of the edge of a pipeline.

   ii. The SFPUC will determine the permitted weight of structures on a case-by-case basis.

- *When the SFPUC performs maintenance on its pipelines, structures of significant weight and/or those that require footings deeper than six inches are very difficult and time-consuming to move and can pose a safety hazard to the pipelines. The longer it takes the SFPUC to reach the pipeline in an emergency, the more damage that can occur.*

G. Paving Materials. Permitted trails or walkways should be paved with materials that both reduce erosion and stormwater runoff (e.g., permeable pavers).

H. License Area Boundary Marking. The License Area's boundaries should be clearly marked by landscaping or fencing, with the aim to prevent encroachments.

I. Fences and Gates. Any fence along the ROW boundary must be of chain-link or wooden construction with viewing access to the ROW. The fence must include a gate that allows SFPUC access to the ROW.[3] Any gate must be of chain-link construction and at least 12 feet wide with a minimum 6-foot vertical clearance.

II. *Types of Recreational Use*

Based on our past experience and research, the SFPUC will allow simple parks without play structures, community gardens and limited trails.

A. Fulfilling an Open Space Requirement. An applicant may not use the ROW to fulfill a development's open space, setback, emergency access or other requirements.[4] In cases where a public agency has received consideration for use of SFPUC land from a third party, such as a developer, the SFPUC may allow such recreational use if the public agency applicant pays full Fair Market Rent.

B. Trail Segments. At this time, the SFPUC will consider trail proposals when a multi-jurisdictional entity presents a plan to incorporate specific ROW parcels into a fully connected trail. Licensed trail segments next to unlicensed parcels may create a trail corridor that poses liability to the SFPUC. The SFPUC will only consider trail proposals where the trail would not continue onto, or encourage entry onto, another ROW parcel without a trail and the trail otherwise meet all SFPUC license requirements.

III. *Utilities*

A. Costs. The Licensee is responsible for all costs associated with use of utilities on the License Area.

[3] SFPUC Right of Way Requirements.
[4] SFPUC Guidelines for the Real Estate Services Division, Section 2.0.

B. Placement. No utilities may be installed on the ROW running parallel to the SFPUC's pipelines, above or below grade.[5] With SFPUC approval, utilities may run perpendicular to the pipelines.

C. Lights. The Licensee shall not install any light fixtures on the ROW that require electrical conduits running parallel to the pipelines. With SFPUC approval, conduits may run perpendicular to and/or across the pipelines.

- Any lighting shall have shielding to prevent spill over onto adjacent properties.

D. Electricity. Licensees shall purchase all electricity from the SFPUC at the SFPUC's prevailing rates for comparable types of electrical load, so long as such electricity is reasonably available for the Licensee's needs.

IV. *Vegetation*

A. The Applicant shall refer to the SFPUC Integrated Vegetation Management Policy for the *minimum* requirements concerning types of vegetation and planting. (http://www.sfwater.org/index.aspx?page=431.) The Licensee is responsible for all vegetation maintenance and removal.

B. The Applicant shall submit a Planting Plan as part of its application.

(Community garden applicants should refer to Section VII.C for separate instructions.)

i. The Planting Plan should include a layout of vegetation placement (grouped by hydrozone) and sources of irrigation, as well as a list of intended types of vegetation. The SFPUC will provide an area drawing including pipelines and facilities upon request.

ii. The Applicant shall also identify the nursery(ies) supplying plant stock and provide evidence that each nursery supplier uses techniques to reduce the risk of plant pathogens, such as Phytophthora ramorum.

V. *Measures to Promote Water Efficiency*[6]

A. The Licensee shall maintain landscaping to ensure water use efficiency.

B. The Licensee shall choose and arrange plants in a manner best suited to the site's climate, soil, sun exposure, wildfire susceptibility and other factors. Plants with similar water needs must be grouped within an area controlled by a single irrigation valve

[5] SFPUC Land Engineering Requirements.
[6] SFPUC Rules and Regulations Governing Water Service to Customers, Section F.

C. Turf is not allowed on slopes greater than 25 percent.

D. The SFPUC encourages the use of local native plant species in order to reduce water use and promote wildlife habitat.

E. Recycled Water. Irrigation systems shall use recycled water if recycled water meeting all public health codes and standards is available and will be available for the foreseeable future.

F. Irrigation Water Runoff Prevention. For landscaped areas of any size, water runoff leaving the landscaped area due to low head drainage, overspray, broken irrigation hardware, or other similar conditions where water flows onto adjacent property, walks, roadways, parking lots, structures, or non-irrigated areas, is prohibited.

VI. *Other Requirements*

A. Financial Stability. The SFPUC requires municipalities or other established organizations with a stable fiscal history as Licensees.

i. Applicants must also demonstrate sufficient financial backing to pay rent, maintain the License Area, and fulfill other license obligations over the license term.

B. Smaller, community-based organizations without 501(c)(3) classifications must partner with a 501(c)(3) classified organization or any other entity through which it can secure funding for the License Area over the license term. Maintenance. The Licensee must maintain the License Area in a clean and sightly condition at its sole cost.[7] Maintenance includes, but is not limited to, regular weed abatement, mowing, and removing graffiti, dumping, and trash.

C. Mitigation and Restoration. The Licensee will be responsible, at its sole cost, for removing and replacing any recreational improvements in order to accommodate planned or emergency maintenance, repairs, replacements, or projects done by or on behalf of the SFPUC. If the Licensee refuses to remove its improvements, SFPUC will remove the improvements I at the Licensee's sole expense without any obligation to replace them.

D. Encroachments. The Licensee will be solely responsible for removing any encroachments on the License Area. An encroachment is any improvement on SFPUC property not approved by the SFPUC. Please read the SFPUC ROW Encroachment Policy for specific requirements. If the Licensee fails to remove encroachments, the SFPUC will remove them at Licensee's sole expense. The Licensee must regularly patrol the License Area to spot encroachments and remove them at an early stage.

[7] SFPUC Framework for Land Management and Use.

E. Point of Contact. The Licensee will identify a point of contact (name, position title, phone number, and address) to serve as the liaison between the Licensee, the local community, and the SFPUC regarding the License Agreement and the License Area. In the event that the point of contact changes, the Licensee shall immediately provide the SFPUC with the new contact information. Once the License Term commences, the point of contact shall inform local community members to direct any maintenance requests to him or her. In the event that local community members contact the SFPUC with such requests, the SFPUC will redirect any requests or complaints to the point of contact.

F. Community Outreach.

i. Following an initial intake conversation with the SFPUC, the Applicant shall provide a Community Outreach Plan for SFPUC approval. This Plan shall include the following information:

1. Identification of key stakeholders to whom the Applicant will contact and/or ask for input, along with their contact information;

2. A description of the Applicant's outreach strategy, tactics, and materials

3. A timeline of outreach (emails/letters mailing date, meetings, etc.); and

4. A description of how the Applicant will incorporate feedback into its proposal.

ii. The Applicant shall conduct outreach for the project at its sole cost and shall keep the SFPUC apprised of any issues arising during outreach.

iii. During outreach, the Applicant shall indicate that it in no way represents the SFPUC.

G. Signage. The SFPUC will provide, at Licensee's cost, a small sign featuring the SFPUC logo and text indicating SFPUC ownership of the License Area at each entrance. In addition, the Licensee will install, at its sole cost, an accompanying sign at each entrance to the License Area notifying visitors to contact the organization's point of contact and provide a current telephone number in case the visitors have any issues. The SFPUC must approve the design and placement of the Licensee's sign.

VII. *Community Gardens*

The following requirements also apply to community garden sites. As with all projects, the details of the operation of a particular community garden are approved on a case-by-case basis.

A. The Applicant must demonstrate stable funding. The Applicant must provide information about grants received, pending grants, and any ongoing foundational support.

B. The Applicant must have an established history and experience in managing urban agriculture or community gardening projects. Alternatively, the Applicant may demonstrate a formal partnership with an organization or agency with an established history and experience in managing urban agriculture or community gardening projects

C. During the Project Review process, the Applicant shall submit a Community Garden Planting Plan that depicts the proposed License Area with individual plot and planter box placements, landscaping, and a general list of crops that may be grown in the garden.

D. The Applicant shall designate a Garden Manager to oversee day-to-day needs and serve as a liaison between the SFPUC and garden plot holders. The Garden Manager may be distinct from the point of contact, see Section VI.E.

E. The Licensee must ensure that the Garden Manager informs plot holders about the potential for and responsibilities related to SFPUC repairs or emergency maintenance on the License Area. In such circumstances, the SFPUC is not liable for the removal and replacement of any features on the License Area or the costs associated with such removal and replacement.

F. The Licensee must conduct all gardening within planter boxes with attached bottoms that allow for easy removal without damaging the crops.

Hetch Hetchy
Regional Water System
Services of the San Francisco Public Utilities Commission

AMENDMENT TO THE

RIGHT OF WAY INTEGRATED VEGETATION MANAGEMENT POLICY

Approved January 13, 2015

by

SFPUC Resolution No. 15-0014

12.000 RIGHT OF WAY INTEGRATED VEGETATION MANAGEMENT POLICY

12.001 General

The San Francisco Public Utilities Commission ("SFPUC") is responsible for the delivery of potable water and the collection and treatment of wastewater for some 800,000 customers within the City of San Francisco; it is also responsible for the delivery of potable water to 26 other water retailers with a customer base of 1.8 million. **The following policy is established to manage vegetation on the transmission, distribution and collection systems within the SFPUC Right of Way ("ROW") so that it does not pose a threat or hazard to the system's integrity and infrastructure or impede utility maintenance and operations.**

The existence of large woody vegetation[1], hereinafter referred to as vegetation, and water transmission lines within the ROW are not compatible and, in fact, are mutually exclusive uses of the same space. Roots can impact transmission pipelines by causing corrosion. The existence of trees and other vegetation directly adjacent to pipelines makes emergency and annual maintenance very difficult, hazardous, and expensive, and increases concerns for public safety. The risk of fire within the ROW is always a concern and the reduction of fire ladder fuels within these corridors is another reason to modify the vegetation mosaic. In addition to managing vegetation in a timely manner to prevent any disruption in utility service, the SFPUC also manages vegetation on its ROW to comply with local fire ordinances enacted to protect public safety.

One of the other objectives of this policy is to reduce and eliminate as much as practicable the use of herbicides on vegetation within the ROW and to implement integrated pest management (IPM).

12.002 Woody Vegetation Management

1.0 Vegetation of any size or species will not be allowed to grow within certain critical portions of the ROW, pumping stations or other facilities as determined by a SFPUC qualified professional, and generally in accordance with the following guidelines.

1.1 Emergency Removal

SFPUC Management reserves the right to remove any vegetation without prior public notification that has been assessed by a SFPUC qualified professional as an immediate threat to transmission lines or other utility infrastructure, human life and property due to acts of God, insects, disease, or natural mortality.

1.2 Priority Removal

Vegetation that is within 15 feet of the edge of any pipe will be removed and the vegetative debris will be cut into short lengths and chipped whenever possible. Chips will be spread upon the site where the vegetation was removed. Material that cannot be chipped will be hauled away to a proper disposal site.

[1] Woody vegetation is defined as all brush, tree and ornamental shrub species planted in (or naturally occurring in) the native soil having a woody stem that at maturity exceeds 3 inches in diameter.

If vegetation along the ROW is grouped in contiguous stands[2], or populations, a systematic and staggered removal of that vegetation will be undertaken to replicate a natural appearance. Initial removal[3] will be vegetation immediately above or within 15 feet of the pipeline edges; secondary vegetation[4] within 15 to 25 feet from pipelines will then be removed.

1.3 Standard Removal

Vegetation that is more than 25 feet from the edge of a pipeline and up to the boundary of the ROW will be assessed by a SFPUC qualified professional for its age and condition, fire risk, and potential impact to the pipelines. Based on this assessment, the vegetation will be removed or retained.

1.4 Removal Standards

Each Operating Division will develop its own set of guidelines or follow established requirements in accordance with local needs.

2.0 All stems of vegetation will be cut flush with the ground and where deemed necessary or appropriate, roots will be removed. All trees identified for removal will be clearly marked with paint and/or a numbered aluminum tag.

3.0 Sprouting species of vegetation will be treated with herbicides where practicable, adhering to provisions of Chapter 3 of the San Francisco Environment Code.

4.0 Erosion control measures, where needed, will be completed before the work crew or contractors leave the work site or before October 15 of the calendar year.

5.0 Department personnel will remove in a timely manner any and all material that has been cut for maintenance purposes within any stream channel.

6.0 All vegetation removal work and consultation on vegetation retention will be reviewed and supervised by a SFPUC qualified professional. All vegetation removal work and/or treatment will be made on a case-by-case basis by a SFPUC qualified professional.

7.0 Notification process for areas of significant resource impact that are beyond regular and ongoing maintenance:

7.1 County/City Notification – The individual Operating Division will have sent to the affected county/city a map showing the sections of the ROW which will be worked, a written description of the work to be done, the appropriate removal time for the work crews, and a contact person for more information. This should be done approximately 10 days prior to start of work. Each Operating Division will develop its own set of guidelines in accordance with local need.

[2] A stand is defined as a community of trees possessing sufficient uniformity in composition, structure, age, arrangement, or condition to be distinguishable from adjacent forest communities to form a management unit.
[3] Initial removal is defined as the vegetation removed during the base year or first year of cutting.
[4] Secondary vegetation is defined as the vegetative growth during the second year following the base year for cutting.

7.2 Public Notification – The Operating Division will have notices posted at areas where the vegetation is to be removed with the same information as above also approximately 10 days prior to removal. Notices will also be sent to all property owners within 300 feet of the removal site. Posted notices will be 11- by 17-inches in size on colored paper and will be put up at each end of the project area and at crossover points through the ROW. Questions and complaints from the public will be handled through a designated contact person. Each Operating Division will develop its own set of guidelines in accordance with local needs.

12.003 Annual Grass and Weed Management

Annual grasses and weeds will be mowed, disked, sprayed or mulched along the ROW as appropriate to reduce vegetation and potential fire danger annually. This treatment should be completed before July 30 of each year. This date is targeted to allow the grasses, forbs and weeds to reach maturity and facilitate control for the season.

12.004 Segments of ROW that are covered by Agricultural deed rights

The only vegetation that may be planted within the ROW on those segments where an adjacent owner has Deeded Agricultural Rights will be: non-woody herbaceous plants such as grasses, flowers, bulbs, or vegetables.

12.005 Segments of ROW that are managed and maintained under a Lease or License

Special allowance may be made for these types of areas, as the vegetation will be maintained by the licensed user as per agreement with the City, and not allowed to grow unchecked. Only shallow rooted plants may be planted directly above the pipelines.

Within the above segments, the cost of vegetation maintenance and removal will be borne by the tenant or licensee exclusively. In a like fashion, when new vegetative encroachments are discovered they will be assessed by a SFPUC qualified professional on a case-by-case basis and either be permitted or proposed for removal.

The following is a guideline for the size at maturity of plants (small trees, shrubs, and groundcover) that may be permitted to be used as landscape materials. Note: All distance measurements are for mature trees and plants measured from the edge of the drip-line to the edge of the pipeline.

- Plants that may be permitted to be planted directly above existing and future pipelines: shallow rooted plants such as ground cover, grasses, flowers, and very low growing plants that grow to a maximum of one foot in height at maturity.
- Plants that may be permitted to be planted 15–25 feet from the edge of existing and future pipelines: shrubs and plants that grow to a maximum of five feet in height at maturity.
- Plants that may be permitted to be planted 25 feet or more from the edge of existing and future pipelines: small trees or shrubs that grow to a maximum of twenty feet in height and fifteen feet in canopy width.

Trees and plants that exceed the maximum height and size limit (described above) may be permitted within a leased or licensed area provided they are in containers and are above ground. Container load and placement location(s) are subject to review and approval by the SFPUC.

Low water use plant species are encouraged and invasive plant species are not allowed.

All appurtenances, vaults, and facility infrastructure must remain visible and accessible at all times. All determinations of species acceptability will be made by a SFPUC qualified professional.

The above policy is for general application and for internal administration purposes only and may not be relied upon by any third party for any reason whatsoever. The SFPUC reserves the right at its sole discretion, to establish stricter policies in any particular situation and to revise and update the above policy at any time.

Email: NRS-KRS 115 kV T-Line

From: Sheelen, Ryan <rsheelen@sjc.org>
Sent: Wednesday, July 24, 2024 1:01 PM
To: NRS-KRS Project
Cc: Wilson, John
Subject: SVP Transmission Line Project & San Jose International Airport Height Concerns

Hi Allie,

My name is Ryan Sheelen, I am the Senior Planner at San Jose International Airport. I recently became aware of this project with plans to install new transmission towers and lines along Lafayette via the filed 7460's on the FAA's Obstruction Evaluation website. This poses significant concern for the Airport, as it is directly in our approach/departure corridor for our Runways and exceeds critical safety surfaces used by our Airlines in inclement weather and for emergencies.

I am hoping to set up a meeting with you to talk through this further and understand the project and explain the Airport's concerns.

Please feel free to reach out via email or call me directly at 408-392-1193. Look forward to connecting with you on this project.

Thank you,

Ryan Sheelen, C.M., ACE
Planner IV | Planning & Development
SJC SAN JOSE MINETA INTERNATIONAL AIRPORT
o: 408.392.1193 | rsheelen@sjc.org
1701 Airport Blvd. Ste. B-1130, San José, CA 95110
flysanjose.com

CALIFORNIA STATE TRANSPORTATION AGENCY

GAVIN NEWSOM, GOVERNOR

California Department of Transportation

DISTRICT 4
OFFICE OF REGIONAL AND COMMUNITY PLANNING
P.O. BOX 23660, MS–10D | OAKLAND, CA 94623-0660
www.dot.ca.gov

August 29, 2024

SCH #: 2024080009
GTS #: 04-SCL-2024-01312
GTS ID: 33540
Co/Rt/Pm: SCL/101/41.183

Allie Jackman, Project Manager
City of Santa Clara
1500 Warburton Avenue
Santa Clara, CA 95050

Re: NRS-KRS 115 kV Transmission Line — Mitigated Negative Declaration (MND)

Dear Allie Jackman:

Thank you for including the California Department of Transportation (Caltrans) in the environmental review process for the NRS-KRS 115 kV Transmission Line project. The Local Development Review (LDR) Program reviews land use projects and plans to ensure consistency with our mission and state planning priorities. The following comments are based on our review of the July 2024 MND.

Please note this correspondence does not indicate an official position by Caltrans on this project and is for informational purposes only.

Project Understanding
The proposed project will include an overhead transmission line that will cross over State Route (SR)-101 near postmile 41.183. The transmission line will be 2.24 miles long and will run between two facilities.

Aeronautics
Caltrans Aeronautics has reviewed the MND for the NRS-KRS 115 kV Transmission Line project in Santa Clara County. One of the goals of the Caltrans Aeronautics Program is to assist cities, counties, and Airport Land Use Commissions (ALUC) or their equivalent, to understand and comply with the State Aeronautics Act pursuant to the California Public Utilities Code (PUC), Section 21001 et seq.

The project site is approximately 0.5 miles south-east of the San Jose Mineta International Airport and spans three safety zones defined by the Airport Land Use Compatibility Plan (ALUCP) for Santa Clara County. Therefore, it must adhere to the

"Provide a safe and reliable transportation network that serves all people and respects the environment."

safety criteria and restrictions defined in the ALUCP, adopted by the ALUC pursuant to PUC Section 21674. The project also contains portions in the 70dB and 75dB Aircraft Noise Contours. The City of Santa Clara should consider the safety zone and noise compatibility polices stipulated in the ALUCP.

The proposed project must comply with requirements outlined by the FAA, specified in Title 14 of the Code of Federal Regulations, Part 77. (14 CFR Part 77). Title 14 CFR Part 77.9 provides vertical and horizontal criteria for construction near an airport. Moreover, the California Public Utilities Code Section 21659 prohibits structural hazards near airports. An Obstruction Analysis will be required by the Federal Aviation Administration (FAA) in accordance with Federal Aviation Regulation, Part 77 "Objects Affecting Navigable Airspace." To ensure compliance notices should be submitted to the FAA's Obstacle Evaluation Group (OEG) online (*link*).

Project Management
If the project requires freeway lane closures during construction, Caltrans must review and approve lane closure timing and traffic handling plans in the Encroachment Permit process. Maintenance of these transmission lines must be the responsibility of the sponsoring agency, which may require an amendment to existing maintenance agreements.

Additionally, Caltrans has a planned pavement preservation project that is in the vicinity of the proposed project. Coordination may be required during the construction phase.

Construction-Related Impacts
Project work that requires movement of oversized or excessive load vehicles on State roadways requires a transportation permit that is issued by Caltrans. To apply, please visit Caltrans Transportation Permits (*link*).Prior to construction, coordination may be required with Caltrans to develop a Transportation Management Plan (TMP) to reduce construction traffic impacts to the State Transportation Network (STN).

Lead Agency
As the Lead Agency, the City is responsible for all project mitigation, including any needed improvements to the STN. The project's fair share contribution, financing, scheduling, implementation responsibilities and lead agency monitoring should be fully discussed for all proposed mitigation measures.

Encroachment Permit
Please be advised that any permanent work or temporary traffic control, or any modification or additional work that encroaches onto Caltrans' Right of Way (ROW) requires a Caltrans-issued encroachment permit and coordination with Caltrans. As part of the encroachment permit submittal process, you may be asked by the Office

of Encroachment Permits to submit a completed encroachment permit application package, digital set of plans clearly delineating Caltrans' ROW, digital copy of signed, dated and stamped (include stamp expiration date) traffic control plans, this comment letter, your response to the comment letter, and where applicable, the following items: new or amended Maintenance Agreement (MA), approved Design Standard Decision Document (DSDD), approved encroachment exception request, and/or airspace lease agreement. All proposed work must be submitted through a Caltrans Encroachment Permit process. The proposed project may require an encroachment policy exception for a permit to be issued so coordinate with the Encroachment Permit office closely.

The Office of Encroachment Permit requires 100% complete design plans and supporting documents to review and circulate the permit application package. To obtain more information and download the permit application, please visit Caltrans Encroachment Permits (*link*). Please note that the checklist TR-0416 is used to determine the appropriate Caltrans review process for encroachment projects. Your application package may be emailed to D4Permits@dot.ca.gov.

Thank you again for including Caltrans in the environmental review process. Should you have any questions regarding this letter, please contact Marley Mathews, Associate Transportation Planner, via LDR-D4@dot.ca.gov.

For future early coordination opportunities or project referrals, please visit Caltrans LDR website (*link*) or contact LDR-D4@dot.ca.gov.

Sincerely,

Marley Mathews

MARLEY MATHEWS
Acting Branch Chief, Local Development Review
Office of Regional and Community Planning

c: State Clearinghouse

"Provide a safe and reliable transportation network that serves all people and respects the environment."

Email: NRS-KRS 115 kV T-Line

From: Kanupriya Kabra <kanupriyak@gmail.com>
Sent: Thursday, August 29, 2024 12:47 PM
To: NRS-KRS Project; mayorandcouncil@santaclaraca.gov; info@siliconvalleypower.com; planningcommission@santaclaraca.gov; manager@santaclaraca.gov; AJackman@santaclaraca.gov
Subject: Concerns Regarding Upcoming High Power Electric Wire Poles in Our Community for the upcoming SVP project connecting the Northern Receiving Station NRS to Kifer receiving station (KRS)- NRS-KRS 115kV Transmission Line Project

To Whomsoever it may concern,
We are residents of Santa Clara that will be negatively impacted by the "NRS-KRS 115kV Transmission Line Project". We have collectively reviewed the draft Initial Study/ Mitigated Negative declaration for "NRS-KRS 115kV Transmission Line Project" from July 2024. After reviewing this report and also attending the virtual and in person meetings, here are some references to emphasize our various concerns.

Reference #1 : CEQA's reporting includes these State reviewing agencies: California Air Resources Board (ARB), California Department of Fish and Wildlife, Bay Delta Region 3 (CDFW), California Department of Forestry and Fire Protection (CAL FIRE), California Department of Parks and Recreation, California Department of Toxic Substances Control (DTSC), California Department of Transportation, District 4 (DOT), California Department of Transportation, Division of Aeronautics (DOT), California Department of Transportation, Division of Transportation Planning (DOT), California Department of Water Resources (DWR), California Energy Commission, California Highway Patrol (CHP), California Native American Heritage Commission (NAHC), California Natural Resources Agency, California Public Utilities Commission (CPUC), California Regional Water Quality Control Board, San Francisco Bay Region 2 (RWQCB), Office of Historic Preservation, State Water Resources Control Board, Division of Drinking Water.

Personal observation#1 : *None of these agencies has any association with human health. CEQA reporting is not qualified enough to force the public to compromise on health concerns. Other agencies need to be involved to review this proposal, that are qualified to study the effect on " humans", not just wildlife and vegetation, or " environment. The checklist is completely devoid of our gravest humanitarian concerns. It is quite shocking that the project has not included any study to understand the potential impact of EMF waves on human lives, given that the transmission lines are potentially less than 60 feet from the closest dwellings. The city of Santa Clara needs to step in and have third party/ independent studies completed in favor of human health.*

Reference #2: Page 41 of report- Section 4.15. Electric and Magnetic Fields summary.

Personal observation#2 : *This consideration was completely absent earlier. Only after the residents raised their voices, this section was added. To our greatest disappointment, this section is copied over from an older report on the "South Loop Reconfiguration Project" from 2020. One would have expected that a new study would have been conducted for a project this size. The lack of due diligence and ignorance towards the specifics of this project are apparent and not acceptable. In fact we have found several sections of this older report as being reused across the entire report.*

The EMP map shared during the in person meeting had several flaws and we would like to question the viability of the study that was completed. What time of the day was the study completed and on what models were the values based on since these were done on assumption for the EMF values that would be there once the project is complete. Since we have seen the several sections of the report redundantly copied over from other reports, we would like a more detailed analysis of this report.

1

Regarding EMF concerns for human health, there are plenty of scientific studies that do indicate the grave concern on human health with EMF exposures and we cannot ignore this aspect. Here is a reference to an article and there are plenty of articles listed here under references:

https://psc.wi.gov/Documents/Brochures/EMF.pdf

There are not enough references listed in the draft report provided to us, and the explanation provided seems to be conveniently using studies that prove otherwise. This needs more investigation and references. The solution provided as raising the height of the poles and increasing the distance is non-existent. It was confirmed during the in person meeting that the design will not be altered and the height was already designed as required according to the SVP team present there. It seems that the preparers of this report did not even read the report after copying pasting from the old report as evident in the list of proposed solutions is not applicable here.

The live presentation on August 22nd showed the comparison of EMF values of household objects as a means to show that everyday household items carry a similar range of mG(milli Gauss) units. This comparison was inherently flawed since it mentioned that the household devices were producing those level at 1 feet while those indicated for 115KVf lines were at 60 feet. further these household devices do not operate 24X7 similar to the transmission lines.

There were a lot of citations of reports showcasing that no clear proof of EMF to human health exists but we would like to also point out certain states like Connecticut Department of Public Health have cited reports that have shown an increased incidence of childhood leukemia(Blood cancer) at avg exposure of only 3 mG. Also they have called out that some utility workers exposed to high levels of emf have increase risks of Lur Gehrig's disease.

They also call out that most impacts of EMF from high voltage lines dissipate at ~300 feet.

These are available on Page 2 & Page 3 of this report: https://portal.ct.gov/-/media/departments-and-agencies/dph/dph/environmental_health/eoha/pdf/emffactsheet2008pdf.pdf

This report has citations from WHO , National Institute of Environmental Health Sciences and California Department of Health Services.

https://www.niehs.nih.gov/sites/default/files/health/materials/electric_and_magnetic_fields_associated_with_the_use_of_electric_power_questions_and_answers_english_508.pdf

Reference #3

Page 174- Section 5.21- Corona and induced current effect:

Personal observation#3

The railway line's proximity to the proposed high transmission lines is very concerning. The centerline distance from proposed lines to railway line is aproximately 50 feet per google maps with some margin for error. As per the report there are no Corona rings proposed for the 115KV lines. There seems to be negligence in design in consideration of the hazards posed by these high voltage lines as Corona effect can transfer current to railway lines. All the residents are at a high risk of accidental hazards given the proximity of the railway line, this project is adding on to the hazards. This section is only stating information about what Corona effect is, as may be required by law, which by the way is again a copy paste from an old report. The only concern discussed in more depth is the audible noise level. The concerns are presented to imply that this is not significant by stating that 115KV lines pose less than significant risk**.**

2

Reference #4: Post meeting material from March 19th 2024
@https://santaclara.legistar.com/LegislationDetail.aspx?ID=6582415&GUID=E6E14646-3CF7-4D15-BB98-F18580696012&Options=&Search=

Personal observation#4: At surface level, it looks like Option #A was selected only based on Cost perspective, without any consideration to human health, young children, property values, Corona effect, long term sustainability perspective or any other factors. While its important to understand the results of CEQA study, its extremely critical to understand the negative impact of EMF on the many young children living around the proposed transmission lines. Without extensive research and study on the impact to young children and adult heath, we should not be approving such an incomplete proposal.

Page 6 of this document stated that the preferred route A cost of construction is $9.5 million. In discussions with several real estate agents in the region, I have unanimously found all to agree that the real estate values of residences in close proximity to power lines goes down. Its hard to find potential buyers and most folks refrain from buying a house too close to high power transmission lines. There are 1000 plus residences in the area affected by this project. Even if we were to make very rough assumptions, and assume minimal cost reduction in property values and take an average loss of $100,000 per property in the current year, that goes to $100,000,000 of loss of equity to the public. This is not even accounting the businesses affected by this project. This long explanation was to raise a point that if the selection of route A was saving money to the city, this is costing a huge financial loss to the public, which is not acceptable. This decrease in property values will also directly impact the tax collection by the Santa Clara Assessor and result in lower tax revenue coming into the city of Santa Clara.

Reference #5 : Page 49 of report- Figure 5.1-2. Wall separating residences and Lafayette Street.

Personal observation#5: *The picture is taken conveniently from the other side of the railway line which is actually Kingsbury street, inside a private community and not Lafayette street. This is further away from the proposed SVP lines. This is very misleading; see snapshots taken from Google maps below*

3

And this is what is included on the report:

NRS-KRS 115kV Transmission Line Project 5.1. Aesthetics

Figure 5.1-2. Wall Separating Residences and Lafayette Street

Figure 5.1-2
Wall Separating Residences and Lafayette Street

July 2024 5.1-5 Administrative Draft MND/IS

The Mission Garden Townhome community has no walls as such and the main entry to residences face the road directly and are the most impacted. There are several other single family homes on Lafayette street with the same impact, having an entryway directly on the street. This and including other citations of reusing sections of older reports, is all in all absolutely unacceptable and instills distrust. This further shows incompetency of the agency/ agencies preparing this report.

Conclusion: *This project's initial study needs to expand beyond CEQA for approval from the public. The limited scope of CEQA has failed to address the following concerns we have:*

4

- *Health hazards due to EMF levels.- This is by far the gravest concern and CEQA is clearly not qualified to study that.*
- *Reduced property values- several references provided below.*
- *Loss of Aesthetic appeal for potential real estate buyers/ new and current businesses.*
- *Increase in audible noise levels during and post construction, which is already high in the area with presence of railway line and air traffic route.*
- *Increased fire hazard/ risk of other accidents.*
- *Induced current on railway lines with close proximity/ corona effect- CEQA report did not clearly address this for a 115KV line.*
- *Economic effect on the community from small to larger scale based on all of the above.*

*We demand further investigation and revisit other routes or proposals to resolve the power needs of the city. We have to ensure our and our kids' health is not at stake in the name of development and infrastructure and are not in agreement for this project to move forward**. We cannot approve this to move forward as of now given the lack of study and absence of a satisfactory solution/ mitigation provided in favor/ assurance to public health.***

Additional References:

Research on effects of EMF on humans:

1. https://www.ncbi.nlm.nih.gov/pmc/articles/PMC6025786/

This research reinforces the concerns of EMF exposure effect on human health.

2. https://www.epa.gov/radtown/electric-and-magnetic-fields-power-lines

This resource suggests taking precautions and keeping distance or limiting exposure. Residents would no longer have either of these two options per the current proposals if they are living there 24-7.

What You Can Do

If you are concerned about possible health risks from electric and magnetic fields, you can:

- **Increase the distance between yourself and the source.** The greater the distance between you and the source of EMF, the lower your exposure.
- **Limit the time spent around the source.** The less time you spend near EMF, the lower your exposure.

3. ***https://www.fastexpert.com/blog/should-i-buy-a-house-near-power-lines/***

These are points of view from a real estate expert who clearly states that property value declines proportionately to the distance of the property from high tension lines. People have apprehensions whether or not research clearly defines the risk. Potential buyers might have low priority for a property too close to a high tension power line.

4. https://orchard.com/blog/posts/power-lines-and-property-value

Another research on real estate values lowered due to high tension power lines proximity.

Email: NRS-KRS 115 kV T-Line

From: Harsha Priya <harshapriya@gmail.com>
Sent: Thursday, August 29, 2024 4:18 PM
To: NRS-KRS Project; mayorandcouncil@santaclaraca.gov; info@siliconvalleypower.com; planningcommission@santaclaraca.gov; manager@santaclaraca.gov; AJackman@santaclaraca.gov
Subject: Concerns Regarding Upcoming High Power Electric Wire Poles in Our Community for the upcoming SVP project connecting the Northern Receiving Station NRS to Kifer receiving station (KRS)- NRS-KRS 115kV Transmission Line Project

To Whomsoever it may concern,

We are residents of Santa Clara that will be negatively impacted by the "NRS-KRS 115kV Transmission Line Project". We have collectively reviewed the draft Initial Study/ Mitigated Negative declaration for "NRS-KRS 115kV Transmission Line Project" from July 2024. After reviewing this report and also attending the virtual and in person meetings, here are some references to emphasize our various concerns.

Reference #1 : CEQA's reporting includes these State reviewing agencies: California Air Resources Board (ARB), California Department of Fish and Wildlife, Bay Delta Region 3 (CDFW), California Department of Forestry and Fire Protection (CAL FIRE), California Department of Parks and Recreation, California Department of Toxic Substances Control (DTSC), California Department of Transportation, District 4 (DOT), California Department of Transportation, Division of Aeronautics (DOT), California Department of Transportation, Division of Transportation Planning (DOT), California Department of Water Resources (DWR), California Energy Commission, California Highway Patrol (CHP), California Native American Heritage Commission (NAHC), California Natural Resources Agency, California Public Utilities Commission (CPUC), California Regional Water Quality Control Board, San Francisco Bay Region 2 (RWQCB), Office of Historic Preservation, State Water Resources Control Board, Division of Drinking Water.

Personal observation#1 : *None of these agencies has any association with human health. CEQA reporting is not qualified enough to force the public to compromise on health concerns. Other agencies need to be involved to review this proposal, that are qualified to study the effect on " humans", not just wildlife and vegetation, or " environment. The checklist is completely devoid of our gravest humanitarian concerns. It is quite shocking that the project has not included any study to understand the potential impact of EMF waves on human lives, given that the transmission lines are potentially less than 60 feet from the closest dwellings. The city of Santa Clara needs to step in and have third party/ independent studies completed in favor of human health.*

Reference #2: Page 41 of report- Section 4.15. Electric and Magnetic Fields summary.

Personal observation#2 : *This consideration was completely absent earlier. Only after the residents raised their voices, this section was added. To our greatest disappointment, this section is copied over from an older report on the "South Loop Reconfiguration Project" from 2020. One would have expected that a new study would have been conducted for a project this size. The lack of due diligence and ignorance towards the specifics of this project are apparent and not acceptable. In fact we have found several sections of this older report as being reused across the entire report.*

The EMP map shared during the in person meeting had several flaws and we would like to question the viability of the study that was completed. What time of the day was the study completed and on what models were the values based on since these were done on assumption for the EMF values that would

1

be there once the project is complete. Since we have seen the several sections of the report redundantly copied over from other reports, we would like a more detailed analysis of this report.

Regarding EMF concerns for human health, there are plenty of scientific studies that do indicate the grave concern on human health with EMF exposures and we cannot ignore this aspect. Here is a reference to an article and there are plenty of articles listed here under references:

https://psc.wi.gov/Documents/Brochures/EMF.pdf

There are not enough references listed in the draft report provided to us, and the explanation provided seems to be conveniently using studies that prove otherwise. This needs more investigation and references. The solution provided as raising the height of the poles and increasing the distance is non-existent. It was confirmed during the in person meeting that the design will not be altered and the height was already designed as required according to the SVP team present there. It seems that the preparers of this report did not even read the report after copying pasting from the old report as evident in the list of proposed solutions is not applicable here.

The live presentation on August 22nd showed the comparison of EMF values of household objects as a means to show that everyday household items carry a similar range of mG(milli Gauss) units. This comparison was inherently flawed since it mentioned that the household devices were producing those level at 1 feet while those indicated for 115KVf lines were at 60 feet. further these household devices do not operate 24X7 similar to the transmission lines.

There were a lot of citations of reports showcasing that no clear proof of EMF to human health exists but we would like to also point out certain states like Connecticut Department of Public Health have cited reports that have shown an increased incidence of childhood leukemia(Blood cancer) at avg exposure of only 3 mG. Also they have called out that some utility workers exposed to high levels of emf have increase risks of Lur Gehrig's disease.

They also call out that most impacts of EMF from high voltage lines dissipate at ~300 feet.

These are available on Page 2 & Page 3 of this report: https://portal.ct.gov/-/media/departments-and-agencies/dph/dph/environmental_health/eoha/pdf/emffactsheet2008pdf.pdf

This report has citations from WHO , National Institute of Environmental Health Sciences and California Department of Health Services.

https://www.niehs.nih.gov/sites/default/files/health/materials/electric_and_magnetic_fields_associated_with_the_use_of_electric_power_questions_and_answers_english_508.pdf

Reference #3

Page 174- Section 5.21- Corona and induced current effect:

Personal observation#3

The railway line's proximity to the proposed high transmission lines is very concerning. The centerline distance from proposed lines to railway line is aproximately 50 feet per google maps with some margin for error. As per the report there are no Corona rings proposed for the 115KV lines. There seems to be negligence in design in consideration of the hazards posed by these high voltage lines as Corona effect can transfer current to railway lines. All the residents are at a high risk of accidental hazards given the proximity of the railway line, this project is adding on to the hazards. This section is only stating information about what Corona effect is, as may be required by law, which by the way is again a copy paste from an old report. The only concern discussed in more depth is the audible noise level. The concerns are presented to imply that this is not significant by stating that 115KV lines pose less than significant risk**.**

2

Reference #4: Post meeting material from March 19th 2024
@https://santaclara.legistar.com/LegislationDetail.aspx?ID=6582415&GUID=E6E14646-3CF7-4D15-BB98-F18580696012&Options=&Search=

Personal observation#4: At surface level, it looks like Option #A was selected only based on Cost perspective, without any consideration to human health, young children, property values, Corona effect, long term sustainability perspective or any other factors. While its important to understand the results of CEQA study, its extremely critical to understand the negative impact of EMF on the many young children living around the proposed transmission lines. Without extensive research and study on the impact to young children and adult heath, we should not be approving such an incomplete proposal.

Page 6 of this document stated that the preferred route A cost of construction is $9.5 million. In discussions with several real estate agents in the region, I have unanimously found all to agree that the real estate values of residences in close proximity to power lines goes down. Its hard to find potential buyers and most folks refrain from buying a house too close to high power transmission lines. There are 1000 plus residences in the area affected by this project. Even if we were to make very rough assumptions, and assume minimal cost reduction in property values and take an average loss of $100,000 per property in the current year, that goes to $100,000,000 of loss of equity to the public. This is not even accounting the businesses affected by this project. This long explanation was to raise a point that if the selection of route A was saving money to the city, this is costing a huge financial loss to the public, which is not acceptable. This decrease in property values will also directly impact the tax collection by the Santa Clara Assessor and result in lower tax revenue coming into the city of Santa Clara.

Reference #5 : Page 49 of report- Figure 5.1-2. Wall separating residences and Lafayette Street.

Personal observation#5: *The picture is taken conveniently from the other side of the railway line which is actually Kingsbury street, inside a private community and not Lafayette street. This is further away from the proposed SVP lines. This is very misleading; see snapshots taken from Google maps below*

3

And this is what is included on the report:

NRS-KRS 115kV Transmission Line Project 5.1. Aesthetics

Figure 5.1-2. Wall Separating Residences and Lafayette Street

Figure 5.1-2

Wall Separating Residences and Lafayette Street

July 2024 5.1-5 Administrative Draft MND/IS

The Mission Garden Townhome community has no walls as such and the main entry to residences face the road directly and are the most impacted. There are several other single family homes on Lafayette street with the same impact, having an entryway directly on the street. This and including other citations

4

of reusing sections of older reports, is all in all absolutely unacceptable and instills distrust. This further shows incompetency of the agency/ agencies preparing this report.

Conclusion: *This project's initial study needs to expand beyond CEQA for approval from the public. The limited scope of CEQA has failed to address the following concerns we have:*

- *Health hazards due to EMF levels.- This is by far the gravest concern and CEQA is clearly not qualified to study that.*
- *Reduced property values- several references provided below.*
- *Loss of Aesthetic appeal for potential real estate buyers/ new and current businesses.*
- *Increase in audible noise levels during and post construction, which is already high in the area with presence of railway line and air traffic route.*
- *Increased fire hazard/ risk of other accidents.*
- *Induced current on railway lines with close proximity/ corona effect- CEQA report did not clearly address this for a 115KV line.*
- *Economic effect on the community from small to larger scale based on all of the above.*

*We demand further investigation and revisit other routes or proposals to resolve the power needs of the city. We have to ensure our and our kids' health is not at stake in the name of development and infrastructure and are not in agreement for this project to move forward**. We cannot approve this to move forward as of now given the lack of study and absence of a satisfactory solution/ mitigation provided in favor/ assurance to public health.***

Additional References:

Research on effects of EMF on humans:

1. https://www.ncbi.nlm.nih.gov/pmc/articles/PMC6025786/

This research reinforces the concerns of EMF exposure effect on human health.

2. https://www.epa.gov/radtown/electric-and-magnetic-fields-power-lines

This resource suggests taking precautions and keeping distance or limiting exposure. Residents would no longer have either of these two options per the current proposals if they are living there 24-7.

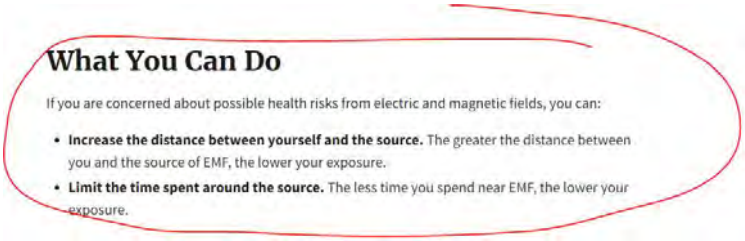

3. ***https://www.fastexpert.com/blog/should-i-buy-a-house-near-power-lines/***

These are points of view from a real estate expert who clearly states that property value declines proportionately to the distance of the property from high tension lines. People have apprehensions whether or not research clearly defines the risk. Potential buyers might have low priority for a property too close to a high tension power line.

4. https://orchard.com/blog/posts/power-lines-and-property-value

Another research on real estate values lowered due to high tension power lines proximity.

5

Email: NRS-KRS 115 kV T-Line

From: Aadya Shrotriya <shrotriya.adya@gmail.com>
Sent: Thursday, August 29, 2024 4:55 PM
To: NRS-KRS Project; mayorandcouncil@santaclaraca.gov; info@siliconvalleypower.com; planningcommission@santaclaraca.gov; manager@santaclaraca.gov; AJackman@santaclaraca.gov
Subject: Concerns Regarding Upcoming High Power Electric Wire Poles in Our Community for the upcoming SVP project connecting the Northern Receiving Station NRS to Kifer receiving station (KRS)- NRS-KRS 115kV Transmission Line Project

To Whomsoever it may concern,

We are residents of Santa Clara that will be negatively impacted by the "NRS-KRS 115kV Transmission Line Project". We have collectively reviewed the draft Initial Study/ Mitigated Negative declaration for "NRS-KRS 115kV Transmission Line Project" from July 2024. After reviewing this report and also attending the virtual and in person meetings, here are some references to emphasize our various concerns.

Reference #1 : CEQA's reporting includes these State reviewing agencies: California Air Resources Board (ARB), California Department of Fish and Wildlife, Bay Delta Region 3 (CDFW), California Department of Forestry and Fire Protection (CAL FIRE), California Department of Parks and Recreation, California Department of Toxic Substances Control (DTSC), California Department of Transportation, District 4 (DOT), California Department of Transportation, Division of Aeronautics (DOT), California Department of Transportation, Division of Transportation Planning (DOT), California Department of Water Resources (DWR), California Energy Commission, California Highway Patrol (CHP), California Native American Heritage Commission (NAHC), California Natural Resources Agency, California Public Utilities Commission (CPUC), California Regional Water Quality Control Board, San Francisco Bay Region 2 (RWQCB), Office of Historic Preservation, State Water Resources Control Board, Division of Drinking Water.

Personal observation#1 : *None of these agencies has any association with human health. CEQA reporting is not qualified enough to force the public to compromise on health concerns. Other agencies need to be involved to review this proposal, that are qualified to study the effect on " humans", not just wildlife and vegetation, or " environment. The checklist is completely devoid of our gravest humanitarian concerns. It is quite shocking that the project has not included any study to understand the potential impact of EMF waves on human lives, given that the transmission lines are potentially less than 60 feet from the closest dwellings. The city of Santa Clara needs to step in and have third party/ independent studies completed in favor of human health.*

Reference #2: Page 41 of report- Section 4.15. Electric and Magnetic Fields summary.

Personal observation#2 : *This consideration was completely absent earlier. Only after the residents raised their voices, this section was added. To our greatest disappointment, this section is copied over from an older report on the "South Loop Reconfiguration Project" from 2020. One would have expected that a new study would have been conducted for a project this size. The lack of due diligence and ignorance towards the specifics of this project are apparent and not acceptable. In fact we have found several sections of this older report as being reused across the entire report.*

The EMP map shared during the in person meeting had several flaws and we would like to question the viability of the study that was completed. What time of the day was the study completed and on what models were the values based on since these were done on assumption for the EMF values that would be there once the project is complete. Since we have seen the several sections of the report redundantly copied over from other reports, we would like a more detailed analysis of this report.

1

Regarding EMF concerns for human health, there are plenty of scientific studies that do indicate the grave concern on human health with EMF exposures and we cannot ignore this aspect. Here is a reference to an article and there are plenty of articles listed here under references:

https://psc.wi.gov/Documents/Brochures/EMF.pdf

There are not enough references listed in the draft report provided to us, and the explanation provided seems to be conveniently using studies that prove otherwise. This needs more investigation and references. The solution provided as raising the height of the poles and increasing the distance is non-existent. It was confirmed during the in person meeting that the design will not be altered and the height was already designed as required according to the SVP team present there. It seems that the preparers of this report did not even read the report after copying pasting from the old report as evident in the list of proposed solutions is not applicable here.

The live presentation on August 22nd showed the comparison of EMF values of household objects as a means to show that everyday household items carry a similar range of mG(milli Gauss) units. This comparison was inherently flawed since it mentioned that the household devices were producing those level at 1 feet while those indicated for 115KVf lines were at 60 feet. further these household devices do not operate 24X7 similar to the transmission lines.

There were a lot of citations of reports showcasing that no clear proof of EMF to human health exists but we would like to also point out certain states like Connecticut Department of Public Health have cited reports that have shown an increased incidence of childhood leukemia(Blood cancer) at avg exposure of only 3 mG. Also they have called out that some utility workers exposed to high levels of emf have increase risks of Lur Gehrig's disease.

They also call out that most impacts of EMF from high voltage lines dissipate at ~300 feet.

These are available on Page 2 & Page 3 of this report: https://portal.ct.gov/-/media/departments-and-agencies/dph/dph/environmental_health/eoha/pdf/emffactsheet2008pdf.pdf

This report has citations from WHO , National Institute of Environmental Health Sciences and California Department of Health Services.

https://www.niehs.nih.gov/sites/default/files/health/materials/electric_and_magnetic_fields_associated_with_the_use_of_electric_power_questions_and_answers_english_508.pdf

Reference #3

Page 174- Section 5.21- Corona and induced current effect:

Personal observation#3

The railway line's proximity to the proposed high transmission lines is very concerning. The centerline distance from proposed lines to railway line is aproximately 50 feet per google maps with some margin for error. As per the report there are no Corona rings proposed for the 115KV lines. There seems to be negligence in design in consideration of the hazards posed by these high voltage lines as Corona effect can transfer current to railway lines. All the residents are at a high risk of accidental hazards given the proximity of the railway line, this project is adding on to the hazards. This section is only stating information about what Corona effect is, as may be required by law, which by the way is again a copy paste from an old report. The only concern discussed in more depth is the audible noise level. The concerns are presented to imply that this is not significant by stating that 115KV lines pose less than significant risk**.**

2

Reference #4: Post meeting material from March 19th 2024
@https://santaclara.legistar.com/LegislationDetail.aspx?ID=6582415&GUID=E6E14646-3CF7-4D15-BB98-F18580696012&Options=&Search=

Personal observation#4: At surface level, it looks like Option #A was selected only based on Cost perspective, without any consideration to human health, young children, property values, Corona effect, long term sustainability perspective or any other factors. While its important to understand the results of CEQA study, its extremely critical to understand the negative impact of EMF on the many young children living around the proposed transmission lines. Without extensive research and study on the impact to young children and adult heath, we should not be approving such an incomplete proposal.

Page 6 of this document stated that the preferred route A cost of construction is $9.5 million. In discussions with several real estate agents in the region, I have unanimously found all to agree that the real estate values of residences in close proximity to power lines goes down. Its hard to find potential buyers and most folks refrain from buying a house too close to high power transmission lines. There are 1000 plus residences in the area affected by this project. Even if we were to make very rough assumptions, and assume minimal cost reduction in property values and take an average loss of $100,000 per property in the current year, that goes to $100,000,000 of loss of equity to the public. This is not even accounting the businesses affected by this project. This long explanation was to raise a point that if the selection of route A was saving money to the city, this is costing a huge financial loss to the public, which is not acceptable. This decrease in property values will also directly impact the tax collection by the Santa Clara Assessor and result in lower tax revenue coming into the city of Santa Clara.

Reference #5 : Page 49 of report- Figure 5.1-2. Wall separating residences and Lafayette Street.

Personal observation#5: *The picture is taken conveniently from the other side of the railway line which is actually Kingsbury street, inside a private community and not Lafayette street. This is further away from the proposed SVP lines. This is very misleading; see snapshots taken from Google maps below*

3

And this is what is included on the report:

NRS-KRS 115kV Transmission Line Project 5.1. Aesthetics

Figure 5.1-2. Wall Separating Residences and Lafayette Street

Figure 5.1-2

Wall Separating Residences and Lafayette Street

July 2024 5.1-5 Administrative Draft MND/IS

The Mission Garden Townhome community has no walls as such and the main entry to residences face the road directly and are the most impacted. There are several other single family homes on Lafayette street with the same impact, having an entryway directly on the street. This and including other citations of reusing sections of older reports, is all in all absolutely unacceptable and instills distrust. This further shows incompetency of the agency/ agencies preparing this report.

4

Conclusion: *This project's initial study needs to expand beyond CEQA for approval from the public. The limited scope of CEQA has failed to address the following concerns we have:*

- *Health hazards due to EMF levels.- This is by far the gravest concern and CEQA is clearly not qualified to study that.*
- *Reduced property values- several references provided below.*
- *Loss of Aesthetic appeal for potential real estate buyers/ new and current businesses.*
- *Increase in audible noise levels during and post construction, which is already high in the area with presence of railway line and air traffic route.*
- *Increased fire hazard/ risk of other accidents.*
- *Induced current on railway lines with close proximity/ corona effect- CEQA report did not clearly address this for a 115KV line.*
- *Economic effect on the community from small to larger scale based on all of the above.*

We demand further investigation and revisit other routes or proposals to resolve the power needs of the city. We have to ensure our and our kids' health is not at stake in the name of development and infrastructure and are not in agreement for this project to move forward. ***We cannot approve this to move forward as of now given the lack of study and absence of a satisfactory solution/ mitigation provided in favor/ assurance to public health.***

Additional References:

Research on effects of EMF on humans:

1. ***https://www.ncbi.nlm.nih.gov/pmc/articles/PMC6025786/***

This research reinforces the concerns of EMF exposure effect on human health.

2. ***https://www.epa.gov/radtown/electric-and-magnetic-fields-power-lines***

This resource suggests taking precautions and keeping distance or limiting exposure. Residents would no longer have either of these two options per the current proposals if they are living there 24-7.

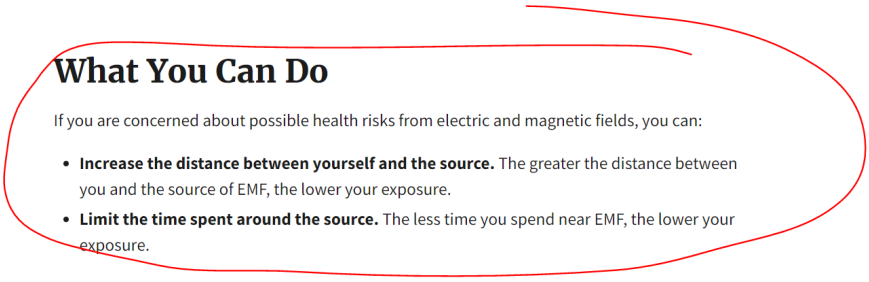

What You Can Do

If you are concerned about possible health risks from electric and magnetic fields, you can:

- **Increase the distance between yourself and the source.** The greater the distance between you and the source of EMF, the lower your exposure.
- **Limit the time spent around the source.** The less time you spend near EMF, the lower your exposure.

3. ***https://www.fastexpert.com/blog/should-i-buy-a-house-near-power-lines/***

These are points of view from a real estate expert who clearly states that property value declines proportionately to the distance of the property from high tension lines. People have apprehensions whether or not research clearly defines the risk. Potential buyers might have low priority for a property too close to a high tension power line.

4. ***https://orchard.com/blog/posts/power-lines-and-property-value***

Another research on real estate values lowered due to high tension power lines proximity.

5

Email: NRS-KRS 115 kV T-Line

From: Jigisha Shukla <jigiskl@gmail.com>
Sent: Thursday, August 29, 2024 10:34 PM
To: NRS-KRS Project; mayorandcouncil@santaclaraca.gov; info@siliconvalleypower.com; planningcommission@santaclaraca.gov; manager@santaclaraca.gov; AJackman@santaclaraca.gov
Subject: Urgent Concerns Regarding NRS-KRS 115kV Transmission Line Project

Dear Santa Clara Officials,

I am writing to express my deep concern regarding the proposed NRS-KRS 115kV Transmission Line Project, connecting the Northern Receiving Station (NRS) to Kifer Receiving Station (KRS). As a resident of Santa Clara, I believe this project, as currently proposed, poses significant risks to our community's health, safety, and property values.

Key Concerns:

1. **Health Risks from EMF Exposure:** The California Environmental Quality Act (CEQA) assessment for this project has inadequately addressed the potential health impacts of electromagnetic fields (EMF) on residents. The report fails to include studies from agencies qualified to assess human health risks, particularly regarding the effects of EMF on people living within 60 feet of these high-voltage lines. Numerous studies indicate serious health concerns, including increased risks of childhood leukemia and other diseases, with prolonged EMF exposure. I urge you to commission independent, third-party studies to thoroughly evaluate these risks before moving forward.
2. **Inadequate Consideration of EMF Impact:** The section on Electric and Magnetic Fields (EMF) in the draft report appears to be copied from an outdated 2020 study related to a different project. The lack of a dedicated, up-to-date study for this specific project is unacceptable. The EMF map shared during recent meetings contained several flaws, including unclear assumptions and **questionable accuracy**. Different areas that are not relevant, have been misrepresented as subject areas. Given the potential for cumulative EMF effects, especially with the planned electrification of nearby railway lines, a comprehensive, current analysis is essential.
3. **Potential Decrease in Property Values:** The proximity of these transmission lines to residential areas is likely to cause a significant drop in property values. Real estate experts confirm that homes near high-tension power lines are harder to sell and typically suffer substantial devaluation. With over 1,000 homes potentially affected, the financial loss to homeowners could far exceed any savings the city might gain by choosing the current route. This decrease in property values would also reduce the city's tax revenue.
4. **Increased Safety Risks:** The proposed transmission lines' proximity to the railway line raises serious safety concerns, particularly the risk of induced currents from the Corona effect. The CEQA report does not adequately address these hazards, which could have catastrophic consequences for nearby residents.

I strongly urge the City of Santa Clara to pause this project until a more thorough evaluation of its impacts can be conducted. This should include independent health studies, a reassessment of property devaluation risks, and a reconsideration of alternative routes or designs that prioritize public safety and well-being. Our community deserves better than a project that could compromise our health, safety, and financial security.

Thank you for your attention to these critical issues.
Jigisha Shukla
Mission Gardens community resident

Email: NRS-KRS 115 kV T-Line

From: Jigisha Shukla <jigiskl29@gmail.com>
Sent: Thursday, August 29, 2024 10:44 PM
To: NRS-KRS Project; mayorandcouncil@santaclaraca.gov; info@siliconvalleypower.com; planningcommission@santaclaraca.gov; manager@santaclaraca.gov; AJackman@santaclaraca.gov
Subject: Concerns Regarding NRS-KRS 115kV Transmission Line

Dear Santa Clara Officials,

I am writing to express my deep concern about the proposed NRS-KRS 115kV Transmission Line Project, which would connect the Northern Receiving Station (NRS) to Kifer Receiving Station (KRS). As a Santa Clara resident, I believe this project, in its current form, poses significant risks to our community's health, safety, and property values.

1. Health Risks from EMF Exposure

- The CEQA assessment inadequately addresses potential health impacts of electromagnetic fields (EMF) on residents.
- No studies from agencies qualified to assess human health risks are included.
- Numerous studies indicate serious health concerns with prolonged EMF exposure, including increased risks of childhood leukemia.
- **Action Needed:** Commission independent, third-party studies to thoroughly evaluate these risks.

2. Inadequate EMF Impact Assessment

- The EMF section in the draft report appears copied from an outdated 2020 study for a different project.
- The EMF map shared at recent meetings contains flaws, including unclear assumptions and questionable accuracy.
- Potential cumulative EMF effects, especially with planned railway electrification, are not addressed.
- **Action Needed:** Conduct a comprehensive, current EMF analysis specific to this project.

3. Potential Property Value Decrease

- Proximity to high-tension power lines typically causes significant property devaluation.
- Over 1,000 homes could be affected, potentially resulting in financial losses exceeding any city savings from the current route.
- Decreased property values would also reduce city tax revenue.
- **Action Needed:** Reassess the economic impact on homeowners and city finances.

4. Increased Safety Risks

- The transmission lines' proximity to the railway raises serious safety concerns, particularly the risk of induced currents from the Corona effect.
- The CEQA report does not adequately address these potential hazards.
- **Action Needed:** Conduct a thorough safety assessment, particularly regarding the interaction between the power lines and nearby railway.

I strongly urge the City of Santa Clara to:

1. Pause this project pending a more thorough evaluation of its impacts.
2. Commission independent health studies on EMF exposure.
3. Reassess the risk of property devaluation and its broader economic impact.
4. Reconsider alternative routes or designs that prioritize public safety and well-being.

Our community deserves a project that does not compromise our health, safety, and financial security. Thank you for your attention to these critical issues.

Sincerely,
Jigisha Shukla
Concerned Santa Clara Resident

Email: NRS-KRS 115 kV T-Line

From: Praveen <praveen.vutukuru@gmail.com>
Sent: Thursday, August 29, 2024 4:59 PM
To: NRS-KRS Project; mayorandcouncil@santaclaraca.gov; info@siliconvalleypower.com; planningcommission@santaclaraca.gov; manager@santaclaraca.gov; AJackman@santaclaraca.gov
Subject: Issues Raised Regarding the "NRS-KRS 115kV Transmission Line Project"

Greetings,

We, the residents of Santa Clara, collectively express our concerns regarding the "NRS-KRS 115kV Transmission Line Project" based on the draft Initial Study/ Mitigated Negative declaration from July 2024.

Reference #1: Lack of Human Health Considerations

- The CEQA reporting includes numerous state reviewing agencies, but none are associated with human health. This deficiency disqualifies CEQA from assessing health concerns.
- The project lacks studies to understand the potential impact of EMF waves on human lives, despite the proximity of transmission lines to dwellings.
- We request that the City of Santa Clara commission independent studies focused on human health.

Reference #2: Reused Sections and Incomplete Analysis

- Section 4.15 of the report, addressing Electric and Magnetic Fields, was added only after residents raised concerns.
- This section is copied from an older report on a different project, indicating a lack of due diligence and ignorance of this project's specifics.
- The EMF map shared during the in-person meeting had flaws, raising questions about the study's validity.
- We request a detailed analysis of the report and the EMF map.

Reference #3: Corona and Induced Current Effect

- The proximity of the railway line to the proposed high transmission lines is concerning.
- The report does not adequately address the hazards posed by high voltage lines and the potential for Corona effect to transfer current to railway lines.
- This negligence poses a high risk to residents, especially considering the railway line's proximity.

Reference #4: Selection of Option A Based on Cost

- Option A was selected solely based on cost, without considering human health, children, property values, and long-term sustainability.
- CEQA's findings are important, but understanding the negative impact of EMF on young children is critical.
- Real estate values near power lines decrease, affecting over 1000 residences and businesses. This loss of equity is unacceptable.

Reference #5: Misleading Picture in the Report

- Figure 5.1-2 in the report includes a misleading picture of a wall separating residences and Lafayette Street.
- The picture was taken from the other side of the railway line, which is further away from the proposed lines.

1

- The Mission Garden Townhome community has no such wall, and the main entry to residences directly faces the street.
- This inaccuracy instills distrust and reflects the incompetency of the agencies preparing the report.

Conclusion and Demands

- The project's initial study must expand beyond CEQA to address our concerns.
- The limited scope of CEQA has failed to address health hazards, reduced property values, aesthetic appeal, noise levels, fire hazards, and economic effects.
- We demand further investigation and revisit other routes or proposals to resolve the city's power needs.
- The health of our residents, especially our children, must not be compromised in the name of development and infrastructure.

We respectfully request that the Santa Clara Mayor and Council take immediate action to address these concerns and ensure the well-being of our community.

Thank you for your attention to this matter.

Sincerely,
Praveen Vutukuru & Vijaya Chaganti

--

Praveen | Software Engineer | Google | 650-265-8190

2

Email: NRS-KRS 115 kV T-Line

From: sudhir kulkarni <sudhir.kulkarni@gmail.com>
Sent: Thursday, August 29, 2024 5:51 PM
To: NRS-KRS Project; mayorandcouncil@santaclaraca.gov; info@siliconvalleypower.com; planningcommission@santaclaraca.gov; manager@santaclaraca.gov; AJackman@santaclaraca.gov
Cc: UJ Kools
Subject: Concerns Regarding Upcoming High Power Electric Wire Poles in Our Community for the upcoming SVP project connecting the Northern Receiving Station NRS to Kifer receiving station (KRS)- NRS-KRS 115kV Transmission Line Project

To Whomsoever it may concern,

We are residents of Santa Clara that will be negatively impacted by the "NRS-KRS 115kV Transmission Line Project". We have collectively reviewed the draft Initial Study/ Mitigated Negative declaration for "NRS-KRS 115kV Transmission Line Project" from July 2024. After reviewing this report and also attending the virtual and in person meetings, here are some references to emphasize our various concerns.

Reference #1 : CEQA's reporting includes these State reviewing agencies: California Air Resources Board (ARB), California Department of Fish and Wildlife, Bay Delta Region 3 (CDFW), California Department of Forestry and Fire Protection (CAL FIRE), California Department of Parks and Recreation, California Department of Toxic Substances Control (DTSC), California Department of Transportation, District 4 (DOT), California Department of Transportation, Division of Aeronautics (DOT), California Department of Transportation, Division of Transportation Planning (DOT), California Department of Water Resources (DWR), California Energy Commission, California Highway Patrol (CHP), California Native American Heritage Commission (NAHC), California Natural Resources Agency, California Public Utilities Commission (CPUC), California Regional Water Quality Control Board, San Francisco Bay Region 2 (RWQCB), Office of Historic Preservation, State Water Resources Control Board, Division of Drinking Water.

Personal observation#1 : *None of these agencies has any association with human health. CEQA reporting is not qualified enough to force the public to compromise on health concerns. Other agencies need to be involved to review this proposal, that are qualified to study the effect on " humans", not just wildlife and vegetation, or " environment. The checklist is completely devoid of our gravest humanitarian concerns. It is quite shocking that the project has not included any study to understand the potential impact of EMF waves on human lives, given that the transmission lines are potentially less than 60 feet from the closest dwellings. The city of Santa Clara needs to step in and have third party/ independent studies completed in favor of human health.*

Reference #2: Page 41 of report- Section 4.15. Electric and Magnetic Fields summary.

Personal observation#2 : *This consideration was completely absent earlier. Only after the residents raised their voices, this section was added. To our greatest disappointment, this section is copied over from an older report on the "South Loop Reconfiguration Project" from 2020. One would have expected that a new study would have been conducted for a project this size. The lack of due diligence and ignorance towards the specifics of this project are apparent and not acceptable. In fact we have found several sections of this older report as being reused across the entire report.*

The EMP map shared during the in person meeting had several flaws and we would like to question the viability of the study that was completed. What time of the day was the study completed and on what models were the values based on since these were done on assumption for the EMF values that would

1

be there once the project is complete. Since we have seen the several sections of the report redundantly copied over from other reports, we would like a more detailed analysis of this report.

Regarding EMF concerns for human health, there are plenty of scientific studies that do indicate the grave concern on human health with EMF exposures and we cannot ignore this aspect. Here is a reference to an article and there are plenty of articles listed here under references:

https://psc.wi.gov/Documents/Brochures/EMF.pdf

There are not enough references listed in the draft report provided to us, and the explanation provided seems to be conveniently using studies that prove otherwise. This needs more investigation and references. The solution provided as raising the height of the poles and increasing the distance is non-existent. It was confirmed during the in person meeting that the design will not be altered and the height was already designed as required according to the SVP team present there. It seems that the preparers of this report did not even read the report after copying pasting from the old report as evident in the list of proposed solutions is not applicable here.

The live presentation on August 22nd showed the comparison of EMF values of household objects as a means to show that everyday household items carry a similar range of mG(milli Gauss) units. This comparison was inherently flawed since it mentioned that the household devices were producing those level at 1 feet while those indicated for 115KVf lines were at 60 feet. further these household devices do not operate 24X7 similar to the transmission lines.

There were a lot of citations of reports showcasing that no clear proof of EMF to human health exists but we would like to also point out certain states like Connecticut Department of Public Health have cited reports that have shown an increased incidence of childhood leukemia(Blood cancer) at avg exposure of only 3 mG. Also they have called out that some utility workers exposed to high levels of emf have increase risks of Lur Gehrig's disease.

They also call out that most impacts of EMF from high voltage lines dissipate at ~300 feet.

These are available on Page 2 & Page 3 of this report: https://portal.ct.gov/-/media/departments-and-agencies/dph/dph/environmental_health/eoha/pdf/emffactsheet2008pdf.pdf

This report has citations from WHO , National Institute of Environmental Health Sciences and California Department of Health Services.

https://www.niehs.nih.gov/sites/default/files/health/materials/electric_and_magnetic_fields_associated_with_the_use_of_electric_power_questions_and_answers_english_508.pdf

Reference #3

Page 174- Section 5.21- Corona and induced current effect:

Personal observation#3

The railway line's proximity to the proposed high transmission lines is very concerning. The centerline distance from proposed lines to railway line is aproximately 50 feet per google maps with some margin for error. As per the report there are no Corona rings proposed for the 115KV lines. There seems to be negligence in design in consideration of the hazards posed by these high voltage lines as Corona effect can transfer current to railway lines. All the residents are at a high risk of accidental hazards given the proximity of the railway line, this project is adding on to the hazards. This section is only stating information about what Corona effect is, as may be required by law, which by the way is again a copy paste from an old report. The only concern discussed in more depth is the audible noise level. The concerns are presented to imply that this is not significant by stating that 115KV lines pose less than significant risk**.**

2

Reference #4: Post meeting material from March 19th 2024
@https://santaclara.legistar.com/LegislationDetail.aspx?ID=6582415&GUID=E6E14646-3CF7-4D15-BB98-F18580696012&Options=&Search=

Personal observation#4: At surface level, it looks like Option #A was selected only based on Cost perspective, without any consideration to human health, young children, property values, Corona effect, long term sustainability perspective or any other factors. While its important to understand the results of CEQA study, its extremely critical to understand the negative impact of EMF on the many young children living around the proposed transmission lines. Without extensive research and study on the impact to young children and adult heath, we should not be approving such an incomplete proposal.

Page 6 of this document stated that the preferred route A cost of construction is $9.5 million. In discussions with several real estate agents in the region, I have unanimously found all to agree that the real estate values of residences in close proximity to power lines goes down. Its hard to find potential buyers and most folks refrain from buying a house too close to high power transmission lines. There are 1000 plus residences in the area affected by this project. Even if we were to make very rough assumptions, and assume minimal cost reduction in property values and take an average loss of $100,000 per property in the current year, that goes to $100,000,000 of loss of equity to the public. This is not even accounting the businesses affected by this project. This long explanation was to raise a point that if the selection of route A was saving money to the city, this is costing a huge financial loss to the public, which is not acceptable. This decrease in property values will also directly impact the tax collection by the Santa Clara Assessor and result in lower tax revenue coming into the city of Santa Clara.

Reference #5 : Page 49 of report- Figure 5.1-2. Wall separating residences and Lafayette Street.

Personal observation#5: *The picture is taken conveniently from the other side of the railway line which is actually Kingsbury street, inside a private community and not Lafayette street. This is further away from the proposed SVP lines. This is very misleading; see snapshots taken from Google maps below*

3

And this is what is included on the report:

NRS-KRS 115kV Transmission Line Project 5.1. Aesthetics

Figure 5.1-2. Wall Separating Residences and Lafayette Street

Figure 5.1-2

Wall Separating Residences and Lafayette Street

July 2024 5.1-5 Administrative Draft MND/IS

The Mission Garden Townhome community has no walls as such and the main entry to residences face the road directly and are the most impacted. There are several other single family homes on Lafayette street with the same impact, having an entryway directly on the street. This and including other citations

4

of reusing sections of older reports, is all in all absolutely unacceptable and instills distrust. This further shows incompetency of the agency/ agencies preparing this report.

Conclusion: *This project's initial study needs to expand beyond CEQA for approval from the public. The limited scope of CEQA has failed to address the following concerns we have:*

- *Health hazards due to EMF levels.- This is by far the gravest concern and CEQA is clearly not qualified to study that.*
- *Reduced property values- several references provided below.*
- *Loss of Aesthetic appeal for potential real estate buyers/ new and current businesses.*
- *Increase in audible noise levels during and post construction, which is already high in the area with presence of railway line and air traffic route.*
- *Increased fire hazard/ risk of other accidents.*
- *Induced current on railway lines with close proximity/ corona effect- CEQA report did not clearly address this for a 115KV line.*
- *Economic effect on the community from small to larger scale based on all of the above.*

We demand further investigation and revisit other routes or proposals to resolve the power needs of the city. We have to ensure our and our kids' health is not at stake in the name of development and infrastructure and are not in agreement for this project to move forward. ***We cannot approve this to move forward as of now given the lack of study and absence of a satisfactory solution/ mitigation provided in favor/ assurance to public health.***

Additional References:

Research on effects of EMF on humans:

1. https://www.ncbi.nlm.nih.gov/pmc/articles/PMC6025786/

This research reinforces the concerns of EMF exposure effect on human health.

2. https://www.epa.gov/radtown/electric-and-magnetic-fields-power-lines

This resource suggests taking precautions and keeping distance or limiting exposure. Residents would no longer have either of these two options per the current proposals if they are living there 24-7.

What You Can Do

If you are concerned about possible health risks from electric and magnetic fields, you can:

- **Increase the distance between yourself and the source.** The greater the distance between you and the source of EMF, the lower your exposure.
- **Limit the time spent around the source.** The less time you spend near EMF, the lower your exposure.

3. ***https://www.fastexpert.com/blog/should-i-buy-a-house-near-power-lines/***

These are points of view from a real estate expert who clearly states that property value declines proportionately to the distance of the property from high tension lines. People have apprehensions whether or not research clearly defines the risk. Potential buyers might have low priority for a property too close to a high tension power line.

5

4. https://orchard.com/blog/posts/power-lines-and-property-value

Another research on real estate values lowered due to high tension power lines proximity.

Thank you,
Sudhir Kulkarni
1961 Silva Pl,
Santa Clara CA 95054

6

Email: NRS-KRS 115 kV T-Line

From: Rajesh Upalekar <rajftp@gmail.com>
Sent: Thursday, August 29, 2024 6:02 PM
To: NRS-KRS Project; mayorandcouncil@santaclaraca.gov; info@siliconvalleypower.com; planningcommission@santaclaraca.gov; manager@santaclaraca.gov; AJackman@santaclaraca.gov
Subject: Concerns Regarding Upcoming High Power Electric Wire Poles in Our Community for the upcoming SVP project connecting the Northern Receiving Station NRS to Kifer receiving station (KRS)- NRS-KRS 115kV Transmission Line Project

To Whomsoever it may concern,

We are residents of Santa Clara that will be negatively impacted by the "NRS-KRS 115kV Transmission Line Project". We have collectively reviewed the draft Initial Study/ Mitigated Negative declaration for "NRS-KRS 115kV Transmission Line Project" from July 2024. After reviewing this report and also attending the virtual and in person meetings, here are some references to emphasize our various concerns.

Reference #1 : CEQA's reporting includes these State reviewing agencies: California Air Resources Board (ARB), California Department of Fish and Wildlife, Bay Delta Region 3 (CDFW), California Department of Forestry and Fire Protection (CAL FIRE), California Department of Parks and Recreation, California Department of Toxic Substances Control (DTSC), California Department of Transportation, District 4 (DOT), California Department of Transportation, Division of Aeronautics (DOT), California Department of Transportation, Division of Transportation Planning (DOT), California Department of Water Resources (DWR), California Energy Commission, California Highway Patrol (CHP), California Native American Heritage Commission (NAHC), California Natural Resources Agency, California Public Utilities Commission (CPUC), California Regional Water Quality Control Board, San Francisco Bay Region 2 (RWQCB), Office of Historic Preservation, State Water Resources Control Board, Division of Drinking Water.

Personal observation#1 : *None of these agencies has any association with human health. CEQA reporting is not qualified enough to force the public to compromise on health concerns. Other agencies need to be involved to review this proposal, that are qualified to study the effect on " humans", not just wildlife and vegetation, or " environment. The checklist is completely devoid of our gravest humanitarian concerns. It is quite shocking that the project has not included any study to understand the potential impact of EMF waves on human lives, given that the transmission lines are potentially less than 60 feet from the closest dwellings. The city of Santa Clara needs to step in and have third party/ independent studies completed in favor of human health.*

Reference #2: Page 41 of report- Section 4.15. Electric and Magnetic Fields summary.

Personal observation#2 : *This consideration was completely absent earlier. Only after the residents raised their voices, this section was added. To our greatest disappointment, this section is copied over from an older report on the "South Loop Reconfiguration Project" from 2020. One would have expected that a new study would have been conducted for a project this size. The lack of due diligence and ignorance towards the specifics of this project are apparent and not acceptable. In fact we have found several sections of this older report as being reused across the entire report.*

The EMP map shared during the in person meeting had several flaws and we would like to question the viability of the study that was completed. What time of the day was the study completed and on what models were the values based on since these were done on assumption for the EMF values that would

1

be there once the project is complete. Since we have seen the several sections of the report redundantly copied over from other reports, we would like a more detailed analysis of this report.

Regarding EMF concerns for human health, there are plenty of scientific studies that do indicate the grave concern on human health with EMF exposures and we cannot ignore this aspect. Here is a reference to an article and there are plenty of articles listed here under references:

https://psc.wi.gov/Documents/Brochures/EMF.pdf

There are not enough references listed in the draft report provided to us, and the explanation provided seems to be conveniently using studies that prove otherwise. This needs more investigation and references. The solution provided as raising the height of the poles and increasing the distance is non-existent. It was confirmed during the in person meeting that the design will not be altered and the height was already designed as required according to the SVP team present there. It seems that the preparers of this report did not even read the report after copying pasting from the old report as evident in the list of proposed solutions is not applicable here.

The live presentation on August 22nd showed the comparison of EMF values of household objects as a means to show that everyday household items carry a similar range of mG(milli Gauss) units. This comparison was inherently flawed since it mentioned that the household devices were producing those level at 1 feet while those indicated for 115KVf lines were at 60 feet. further these household devices do not operate 24X7 similar to the transmission lines.

There were a lot of citations of reports showcasing that no clear proof of EMF to human health exists but we would like to also point out certain states like Connecticut Department of Public Health have cited reports that have shown an increased incidence of childhood leukemia(Blood cancer) at avg exposure of only 3 mG. Also they have called out that some utility workers exposed to high levels of emf have increase risks of Lur Gehrig's disease.

They also call out that most impacts of EMF from high voltage lines dissipate at ~300 feet.

These are available on Page 2 & Page 3 of this report: https://portal.ct.gov/-/media/departments-and-agencies/dph/dph/environmental_health/eoha/pdf/emffactsheet2008pdf.pdf

This report has citations from WHO , National Institute of Environmental Health Sciences and California Department of Health Services.

https://www.niehs.nih.gov/sites/default/files/health/materials/electric_and_magnetic_fields_associated_with_the_use_of_electric_power_questions_and_answers_english_508.pdf

Reference #3

Page 174- Section 5.21- Corona and induced current effect:

Personal observation#3

The railway line's proximity to the proposed high transmission lines is very concerning. The centerline distance from proposed lines to railway line is aproximately 50 feet per google maps with some margin for error. As per the report there are no Corona rings proposed for the 115KV lines. There seems to be negligence in design in consideration of the hazards posed by these high voltage lines as Corona effect can transfer current to railway lines. All the residents are at a high risk of accidental hazards given the proximity of the railway line, this project is adding on to the hazards. This section is only stating information about what Corona effect is, as may be required by law, which by the way is again a copy paste from an old report. The only concern discussed in more depth is the audible noise level. The concerns are presented to imply that this is not significant by stating that 115KV lines pose less than significant risk**.**

2

Reference #4: Post meeting material from March 19th 2024
@https://santaclara.legistar.com/LegislationDetail.aspx?ID=6582415&GUID=E6E14646-3CF7-4D15-BB98-F18580696012&Options=&Search=

Personal observation#4: At surface level, it looks like Option #A was selected only based on Cost perspective, without any consideration to human health, young children, property values, Corona effect, long term sustainability perspective or any other factors. While its important to understand the results of CEQA study, its extremely critical to understand the negative impact of EMF on the many young children living around the proposed transmission lines. Without extensive research and study on the impact to young children and adult heath, we should not be approving such an incomplete proposal.

Page 6 of this document stated that the preferred route A cost of construction is $9.5 million. In discussions with several real estate agents in the region, I have unanimously found all to agree that the real estate values of residences in close proximity to power lines goes down. Its hard to find potential buyers and most folks refrain from buying a house too close to high power transmission lines. There are 1000 plus residences in the area affected by this project. Even if we were to make very rough assumptions, and assume minimal cost reduction in property values and take an average loss of $100,000 per property in the current year, that goes to $100,000,000 of loss of equity to the public. This is not even accounting the businesses affected by this project. This long explanation was to raise a point that if the selection of route A was saving money to the city, this is costing a huge financial loss to the public, which is not acceptable. This decrease in property values will also directly impact the tax collection by the Santa Clara Assessor and result in lower tax revenue coming into the city of Santa Clara.

Reference #5 : Page 49 of report- Figure 5.1-2. Wall separating residences and Lafayette Street.

Personal observation#5: *The picture is taken conveniently from the other side of the railway line which is actually Kingsbury street, inside a private community and not Lafayette street. This is further away from the proposed SVP lines. This is very misleading; see snapshots taken from Google maps below*

3

And this is what is included on the report:

NRS-KRS 115kV Transmission Line Project 5.1. Aesthetics

Figure 5.1-2. Wall Separating Residences and Lafayette Street

Figure 5.1-2
Wall Separating Residences and Lafayette Street

July 2024 5.1-5 Administrative Draft MND/IS

The Mission Garden Townhome community has no walls as such and the main entry to residences face the road directly and are the most impacted. There are several other single family homes on Lafayette street with the same impact, having an entryway directly on the street. This and including other citations of reusing sections of older reports, is all in all absolutely unacceptable and instills distrust. This further shows incompetency of the agency/ agencies preparing this report.

4

Conclusion: *This project's initial study needs to expand beyond CEQA for approval from the public. The limited scope of CEQA has failed to address the following concerns we have:*

- *Health hazards due to EMF levels.- This is by far the gravest concern and CEQA is clearly not qualified to study that.*
- *Reduced property values- several references provided below.*
- *Loss of Aesthetic appeal for potential real estate buyers/ new and current businesses.*
- *Increase in audible noise levels during and post construction, which is already high in the area with presence of railway line and air traffic route.*
- *Increased fire hazard/ risk of other accidents.*
- *Induced current on railway lines with close proximity/ corona effect- CEQA report did not clearly address this for a 115KV line.*
- *Economic effect on the community from small to larger scale based on all of the above.*

We demand further investigation and revisit other routes or proposals to resolve the power needs of the city. We have to ensure our and our kids' health is not at stake in the name of development and infrastructure and are not in agreement for this project to move forward. ***We cannot approve this to move forward as of now given the lack of study and absence of a satisfactory solution/ mitigation provided in favor/ assurance to public health.***

Additional References:

Research on effects of EMF on humans:

1. ***https://www.ncbi.nlm.nih.gov/pmc/articles/PMC6025786/***

This research reinforces the concerns of EMF exposure effect on human health.

2. ***https://www.epa.gov/radtown/electric-and-magnetic-fields-power-lines***

This resource suggests taking precautions and keeping distance or limiting exposure. Residents would no longer have either of these two options per the current proposals if they are living there 24-7.

What You Can Do

If you are concerned about possible health risks from electric and magnetic fields, you can:

- **Increase the distance between yourself and the source.** The greater the distance between you and the source of EMF, the lower your exposure.
- **Limit the time spent around the source.** The less time you spend near EMF, the lower your exposure.

3. ***https://www.fastexpert.com/blog/should-i-buy-a-house-near-power-lines/***

These are points of view from a real estate expert who clearly states that property value declines proportionately to the distance of the property from high tension lines. People have apprehensions whether or not research clearly defines the risk. Potential buyers might have low priority for a property too close to a high tension power line.

4. ***https://orchard.com/blog/posts/power-lines-and-property-value***

Another research on real estate values lowered due to high tension power lines proximity.

5

Email: NRS-KRS 115 kV T-Line

From: Amit Chandak <chandakmf@gmail.com>
Sent: Friday, August 30, 2024 2:36 PM
To: NRS-KRS Project; mayorandcouncil@santaclaraca.gov; info@siliconvalleypower.com; planningcommission@santaclaraca.gov; manager@santaclaraca.gov; AJackman@santaclaraca.gov
Subject: Concerns Regarding Upcoming High Power Electric Wire Poles in Our Community for the upcoming SVP project connecting the Northern Receiving Station NRS to Kifer receiving station (KRS)- NRS-KRS 115kV Transmission Line Project

To Whomsoever it may concern,
We are residents of Santa Clara that will be negatively impacted by the "NRS-KRS 115kV Transmission Line Project". We have collectively reviewed the draft Initial Study/ Mitigated Negative declaration for "NRS-KRS 115kV Transmission Line Project" from July 2024. After reviewing this report and also attending the virtual and in person meetings, here are some references to emphasize our various concerns.

Reference #1 : CEQA's reporting includes these State reviewing agencies: California Air Resources Board (ARB), California Department of Fish and Wildlife, Bay Delta Region 3 (CDFW), California Department of Forestry and Fire Protection (CAL FIRE), California Department of Parks and Recreation, California Department of Toxic Substances Control (DTSC), California Department of Transportation, District 4 (DOT), California Department of Transportation, Division of Aeronautics (DOT), California Department of Transportation, Division of Transportation Planning (DOT), California Department of Water Resources (DWR), California Energy Commission, California Highway Patrol (CHP), California Native American Heritage Commission (NAHC), California Natural Resources Agency, California Public Utilities Commission (CPUC), California Regional Water Quality Control Board, San Francisco Bay Region 2 (RWQCB), Office of Historic Preservation, State Water Resources Control Board, Division of Drinking Water.

Personal observation#1 : *None of these agencies has any association with human health. CEQA reporting is not qualified enough to force the public to compromise on health concerns. Other agencies need to be involved to review this proposal, that are qualified to study the effect on " humans", not just wildlife and vegetation, or " environment. The checklist is completely devoid of our gravest humanitarian concerns. It is quite shocking that the project has not included any study to understand the potential impact of EMF waves on human lives, given that the transmission lines are potentially less than 60 feet from the closest dwellings. The city of Santa Clara needs to step in and have third party/ independent studies completed in favor of human health.*

Reference #2: Page 41 of report- Section 4.15. Electric and Magnetic Fields summary.

Personal observation#2 : *This consideration was completely absent earlier. Only after the residents raised their voices, this section was added. To our greatest disappointment, this section is copied over from an older report on the "South Loop Reconfiguration Project" from 2020. One would have expected that a new study would have been conducted for a project this size. The lack of due diligence and ignorance towards the specifics of this project are apparent and not acceptable. In fact we have found several sections of this older report as being reused across the entire report.*

The EMP map shared during the in person meeting had several flaws and we would like to question the viability of the study that was completed. What time of the day was the study completed and on what models were the values based on since these were done on assumption for the EMF values that would be there once the project is complete. Since we have seen the several sections of the report redundantly copied over from other reports, we would like a more detailed analysis of this report.

1

Regarding EMF concerns for human health, there are plenty of scientific studies that do indicate the grave concern on human health with EMF exposures and we cannot ignore this aspect. Here is a reference to an article and there are plenty of articles listed here under references:

https://psc.wi.gov/Documents/Brochures/EMF.pdf

There are not enough references listed in the draft report provided to us, and the explanation provided seems to be conveniently using studies that prove otherwise. This needs more investigation and references. The solution provided as raising the height of the poles and increasing the distance is non-existent. It was confirmed during the in person meeting that the design will not be altered and the height was already designed as required according to the SVP team present there. It seems that the preparers of this report did not even read the report after copying pasting from the old report as evident in the list of proposed solutions is not applicable here.

The live presentation on August 22nd showed the comparison of EMF values of household objects as a means to show that everyday household items carry a similar range of mG(milli Gauss) units. This comparison was inherently flawed since it mentioned that the household devices were producing those level at 1 feet while those indicated for 115KVf lines were at 60 feet. further these household devices do not operate 24X7 similar to the transmission lines.

There were a lot of citations of reports showcasing that no clear proof of EMF to human health exists but we would like to also point out certain states like Connecticut Department of Public Health have cited reports that have shown an increased incidence of childhood leukemia(Blood cancer) at avg exposure of only 3 mG. Also they have called out that some utility workers exposed to high levels of emf have increase risks of Lur Gehrig's disease.

They also call out that most impacts of EMF from high voltage lines dissipate at ~300 feet.

These are available on Page 2 & Page 3 of this report: https://portal.ct.gov/-/media/departments-and-agencies/dph/dph/environmental_health/eoha/pdf/emffactsheet2008pdf.pdf

This report has citations from WHO , National Institute of Environmental Health Sciences and California Department of Health Services.

https://www.niehs.nih.gov/sites/default/files/health/materials/electric_and_magnetic_fields_associated_with_the_use_of_electric_power_questions_and_answers_english_508.pdf

Reference #3

Page 174- Section 5.21- Corona and induced current effect:

Personal observation#3

The railway line's proximity to the proposed high transmission lines is very concerning. The centerline distance from proposed lines to railway line is aproximately 50 feet per google maps with some margin for error. As per the report there are no Corona rings proposed for the 115KV lines. There seems to be negligence in design in consideration of the hazards posed by these high voltage lines as Corona effect can transfer current to railway lines. All the residents are at a high risk of accidental hazards given the proximity of the railway line, this project is adding on to the hazards. This section is only stating information about what Corona effect is, as may be required by law, which by the way is again a copy paste from an old report. The only concern discussed in more depth is the audible noise level. The concerns are presented to imply that this is not significant by stating that 115KV lines pose less than significant risk**.**

2

Reference #4: Post meeting material from March 19th 2024 @https://santaclara.legistar.com/LegislationDetail.aspx?ID=6582415&GUID=E6E14646-3CF7-4D15-BB98-F18580696012&Options=&Search=

Personal observation#4: At surface level, it looks like Option #A was selected only based on Cost perspective, without any consideration to human health, young children, property values, Corona effect, long term sustainability perspective or any other factors. While its important to understand the results of CEQA study, its extremely critical to understand the negative impact of EMF on the many young children living around the proposed transmission lines. Without extensive research and study on the impact to young children and adult heath, we should not be approving such an incomplete proposal.

Page 6 of this document stated that the preferred route A cost of construction is $9.5 million. In discussions with several real estate agents in the region, I have unanimously found all to agree that the real estate values of residences in close proximity to power lines goes down. Its hard to find potential buyers and most folks refrain from buying a house too close to high power transmission lines. There are 1000 plus residences in the area affected by this project. Even if we were to make very rough assumptions, and assume minimal cost reduction in property values and take an average loss of $100,000 per property in the current year, that goes to $100,000,000 of loss of equity to the public. This is not even accounting the businesses affected by this project. This long explanation was to raise a point that if the selection of route A was saving money to the city, this is costing a huge financial loss to the public, which is not acceptable. This decrease in property values will also directly impact the tax collection by the Santa Clara Assessor and result in lower tax revenue coming into the city of Santa Clara.

Reference #5 : Page 49 of report- Figure 5.1-2. Wall separating residences and Lafayette Street.

Personal observation#5: *The picture is taken conveniently from the other side of the railway line which is actually Kingsbury street, inside a private community and not Lafayette street. This is further away from the proposed SVP lines. This is very misleading; see snapshots taken from Google maps below*

3

And this is what is included on the report:

NRS-KRS 115kV Transmission Line Project 5.1. Aesthetics

Figure 5.1-2. Wall Separating Residences and Lafayette Street

Figure 5.1-2
Wall Separating Residences and Lafayette Street

July 2024 5.1-5 Administrative Draft MND/IS

The Mission Garden Townhome community has no walls as such and the main entry to residences face the road directly and are the most impacted. There are several other single family homes on Lafayette street with the same impact, having an entryway directly on the street. This and including other citations of reusing sections of older reports, is all in all absolutely unacceptable and instills distrust. This further shows incompetency of the agency/ agencies preparing this report.

4

Conclusion: *This project's initial study needs to expand beyond CEQA for approval from the public. The limited scope of CEQA has failed to address the following concerns we have:*

- *Health hazards due to EMF levels.- This is by far the gravest concern and CEQA is clearly not qualified to study that.*
- *Reduced property values- several references provided below.*
- *Loss of Aesthetic appeal for potential real estate buyers/ new and current businesses.*
- *Increase in audible noise levels during and post construction, which is already high in the area with presence of railway line and air traffic route.*
- *Increased fire hazard/ risk of other accidents.*
- *Induced current on railway lines with close proximity/ corona effect- CEQA report did not clearly address this for a 115KV line.*
- *Economic effect on the community from small to larger scale based on all of the above.*

We demand further investigation and revisit other routes or proposals to resolve the power needs of the city. We have to ensure our and our kids' health is not at stake in the name of development and infrastructure and are not in agreement for this project to move forward. ***We cannot approve this to move forward as of now given the lack of study and absence of a satisfactory solution/ mitigation provided in favor/ assurance to public health.***

Thanks & Regards,
Kanupriya

Additional References:

Research on effects of EMF on humans:

1. https://www.ncbi.nlm.nih.gov/pmc/articles/PMC6025786/

This research reinforces the concerns of EMF exposure effect on human health.

2. https://www.epa.gov/radtown/electric-and-magnetic-fields-power-lines

This resource suggests taking precautions and keeping distance or limiting exposure. Residents would no longer have either of these two options per the current proposals if they are living there 24-7.

What You Can Do

If you are concerned about possible health risks from electric and magnetic fields, you can:

- **Increase the distance between yourself and the source.** The greater the distance between you and the source of EMF, the lower your exposure.
- **Limit the time spent around the source.** The less time you spend near EMF, the lower your exposure.

3. ***https://www.fastexpert.com/blog/should-i-buy-a-house-near-power-lines/***

These are points of view from a real estate expert who clearly states that property value declines proportionately to the distance of the property from high tension lines. People have apprehensions whether or not research clearly defines the risk. Potential buyers might have low priority for a property too close to a high tension power line.

4. https://orchard.com/blog/posts/power-lines-and-property-value

Another research on real estate values lowered due to high tension power lines proximity.

Email: NRS-KRS 115 kV T-Line

From: Neelam <neelz.dabholkar@gmail.com>
Sent: Friday, August 30, 2024 3:35 PM
To: NRS-KRS Project; mayorandcouncil@santaclaraca.gov; info@siliconvalleypower.com; planningcommission@santaclaraca.gov; manager@santaclaraca.gov; AJackman@santaclaraca.gov
Subject: Concerns Regarding Upcoming High Power Electric Wire Poles in Our Community for the upcoming SVP project connecting the Northern Receiving Station NRS to Kifer receiving station (KRS)- NRS-KRS 115kV Transmission Line Project

To Whomsoever it may concern,

We are residents of Santa Clara that will be negatively impacted by the "NRS-KRS 115kV Transmission Line Project". We have collectively reviewed the draft Initial Study/ Mitigated Negative declaration for "NRS-KRS 115kV Transmission Line Project" from July 2024. After reviewing this report and also attending the virtual and in person meetings, here are some references to emphasize our various concerns.

Reference #1 : CEQA's reporting includes these State reviewing agencies: California Air Resources Board (ARB), California Department of Fish and Wildlife, Bay Delta Region 3 (CDFW), California Department of Forestry and Fire Protection (CAL FIRE), California Department of Parks and Recreation, California Department of Toxic Substances Control (DTSC), California Department of Transportation, District 4 (DOT), California Department of Transportation, Division of Aeronautics (DOT), California Department of Transportation, Division of Transportation Planning (DOT), California Department of Water Resources (DWR), California Energy Commission, California Highway Patrol (CHP), California Native American Heritage Commission (NAHC), California Natural Resources Agency, California Public Utilities Commission (CPUC), California Regional Water Quality Control Board, San Francisco Bay Region 2 (RWQCB), Office of Historic Preservation, State Water Resources Control Board, Division of Drinking Water.

Personal observation#1 : *None of these agencies has any association with human health. CEQA reporting is not qualified enough to force the public to compromise on health concerns. Other agencies need to be involved to review this proposal, that are qualified to study the effect on " humans", not just wildlife and vegetation, or " environment. The checklist is completely devoid of our gravest humanitarian concerns. It is quite shocking that the project has not included any study to understand the potential impact of EMF waves on human lives, given that the transmission lines are potentially less than 60 feet from the closest dwellings. The city of Santa Clara needs to step in and have third party/ independent studies completed in favor of human health.*

Reference #2: Page 41 of report- Section 4.15. Electric and Magnetic Fields summary.

Personal observation#2 : *This consideration was completely absent earlier. Only after the residents raised their voices, this section was added. To our greatest disappointment, this section is copied over from an older report on the "South Loop Reconfiguration Project" from 2020. One would have expected that a new study would have been conducted for a project this size. The lack of due diligence and ignorance towards the specifics of this project are apparent and not acceptable. In fact we have found several sections of this older report as being reused across the entire report.*

The EMP map shared during the in person meeting had several flaws and we would like to question the viability of the study that was completed. What time of the day was the study completed and on what models were the values based on since these were done on assumption for the EMF values that would

1

be there once the project is complete. Since we have seen the several sections of the report redundantly copied over from other reports, we would like a more detailed analysis of this report.

Regarding EMF concerns for human health, there are plenty of scientific studies that do indicate the grave concern on human health with EMF exposures and we cannot ignore this aspect. Here is a reference to an article and there are plenty of articles listed here under references:

https://psc.wi.gov/Documents/Brochures/EMF.pdf

There are not enough references listed in the draft report provided to us, and the explanation provided seems to be conveniently using studies that prove otherwise. This needs more investigation and references. The solution provided as raising the height of the poles and increasing the distance is non-existent. It was confirmed during the in person meeting that the design will not be altered and the height was already designed as required according to the SVP team present there. It seems that the preparers of this report did not even read the report after copying pasting from the old report as evident in the list of proposed solutions is not applicable here.

The live presentation on August 22nd showed the comparison of EMF values of household objects as a means to show that everyday household items carry a similar range of mG(milli Gauss) units. This comparison was inherently flawed since it mentioned that the household devices were producing those level at 1 feet while those indicated for 115KVf lines were at 60 feet. further these household devices do not operate 24X7 similar to the transmission lines.

There were a lot of citations of reports showcasing that no clear proof of EMF to human health exists but we would like to also point out certain states like Connecticut Department of Public Health have cited reports that have shown an increased incidence of childhood leukemia(Blood cancer) at avg exposure of only 3 mG. Also they have called out that some utility workers exposed to high levels of emf have increase risks of Lur Gehrig's disease.

They also call out that most impacts of EMF from high voltage lines dissipate at ~300 feet. These are available on Page 2 & Page 3 of this report: https://portal.ct.gov/-/media/departments-and-agencies/dph/dph/environmental_health/eoha/pdf/emffactsheet2008pdf.pdf

This report has citations from WHO , National Institute of Environmental Health Sciences and California Department of Health Services.

https://www.niehs.nih.gov/sites/default/files/health/materials/electric_and_magnetic_fields_associated_with_the_use_of_electric_power_questions_and_answers_english_508.pdf

Some other questions around the EMF study map shared during presentation on Aug 22 2024:

1. Have you conducted an existing EMF study to identify the current value of the community ?

2. Are your emf study values based on the cumulative, or interference of existing emf and potential emf.

3. Emf value was calculated based on existing studies. What was the delta between mathematical modeling and actual values (from existing structures).

4. What is the delta between underground and overhead structures' emf values?

5. Can you provide the same for Route options B and C?

6. What happens when electrification of rail lines happens- as this is already planned for the future? Have you potentially considered the cumulative EMF effect in coexistence of the high power lines and with railway lines' electrification? Will the EMF values not be much higher then?

2

7. Can you share the mathematical modeling maps of Emf for 115k, 230k and the next two higher values of the power line ?

8. Can you share Emf maps from existing structures of 115k, 230 k and the next 2 higher values of the power line?

9. Please share any emf related information that you have especially if it contains assumptions for any calculations so we can understand the effects of current project and future projects.

10. Why does the electric pole structure proposed have wider diameter at the top? Can you share the design of the top of the pole ? Can it be extended by adding another section by bolting, welding or any other method? If so, what extra voltage can be added to the line?

11. what is the proposed power consumption of 95054 zip code for the next 5, 10 and 15 years in the master plan ?

Reference #3

Page 174- Section 5.21- Corona and induced current effect:

Personal observation#3

The railway line's proximity to the proposed high transmission lines is very concerning. The centerline distance from proposed lines to railway line is aproximately 50 feet per google maps with some margin for error. As per the report there are no Corona rings proposed for the 115KV lines. There seems to be negligence in design in consideration of the hazards posed by these high voltage lines as Corona effect can transfer current to railway lines. All the residents are at a high risk of accidental hazards given the proximity of the railway line, this project is adding on to the hazards. This section is only stating information about what Corona effect is, as may be required by law, which by the way is again a copy paste from an old report. The only concern discussed in more depth is the audible noise level. The concerns are presented to imply that this is not significant by stating that 115KV lines pose less than significant risk**.**

Reference #4: Post meeting material from March 19th 2024
@https://santaclara.legistar.com/LegislationDetail.aspx?ID=6582415&GUID=E6E14646-3CF7-4D15-BB98-F18580696012&Options=&Search=

Personal observation#4: At surface level, it looks like Option #A was selected only based on Cost perspective, without any consideration to human health, young children, property values, Corona effect, long term sustainability perspective or any other factors. While its important to understand the results of CEQA study, its extremely critical to understand the negative impact of EMF on the many young children living around the proposed transmission lines. Without extensive research and study on the impact to young children and adult heath, we should not be approving such an incomplete proposal.

Page 6 of this document stated that the preferred route A cost of construction is $9.5 million. In discussions with several real estate agents in the region, I have unanimously found all to agree that the real estate values of residences in close proximity to power lines goes down. Its hard to find potential buyers and most folks refrain from buying a house too close to high power transmission lines. There are 1000 plus residences in the area affected by this project. Even if we were to make very rough assumptions, and assume minimal cost reduction in property values and take an average loss of $100,000 per property in the current year, that goes to $100,000,000 of loss of equity to the public. This is not even accounting the businesses affected by this project. This long explanation was to raise a point that if the selection of route A was saving money to the city, this is costing a huge financial loss to the

public, which is not acceptable. This decrease in property values will also directly impact the tax collection by the Santa Clara Assessor and result in lower tax revenue coming into the city of Santa Clara.

Reference #5 : Page 49 of report- Figure 5.1-2. Wall separating residences and Lafayette Street.

Personal observation#5: *The picture is taken conveniently from the other side of the railway line which is actually Kingsbury street, inside a private community and not Lafayette street. This is further away from the proposed SVP lines. This is very misleading; see snapshots taken from Google maps below*

4

And this is what is included on the report:

Figure 5.1-2. Wall Separating Residences and Lafayette Street

Figure 5.1-2

Wall Separating Residences and Lafayette Street

The Mission Garden Townhome community has no walls as such and the main entry to residences face the road directly and are the most impacted. There are several other single family homes on Lafayette street with the same impact, having an entryway directly on the street. This and including other citations of reusing sections of older reports, is all in all absolutely unacceptable and instills distrust. This further shows incompetency of the agency/ agencies preparing this report.

Conclusion: *This project's initial study needs to expand beyond CEQA for approval from the public. The limited scope of CEQA has failed to address the following concerns we have:*

- *Health hazards due to EMF levels.- This is by far the gravest concern and CEQA is clearly not qualified to study that.*
- *Reduced property values- several references provided below.*
- *Loss of Aesthetic appeal for potential real estate buyers/ new and current businesses.*
- *Increase in audible noise levels during and post construction, which is already high in the area with presence of railway line and air traffic route.*
- *Increased fire hazard/ risk of other accidents.*
- *Induced current on railway lines with close proximity/ corona effect- CEQA report did not clearly address this for a 115KV line.*
- *Economic effect on the community from small to larger scale based on all of the above.*

*We demand further investigation and revisit other routes or proposals to resolve the power needs of the city. We have to ensure our and our kids' health is not at stake in the name of development and infrastructure and are not in agreement for this project to move forward**. We cannot approve this to move forward as of now given the lack of study and absence of a satisfactory solution/ mitigation provided in favor/ assurance to public health.***

5

Additional References:

Research on effects of EMF on humans:

1. https://www.ncbi.nlm.nih.gov/pmc/articles/PMC6025786/

This research reinforces the concerns of EMF exposure effect on human health.

2. https://www.epa.gov/radtown/electric-and-magnetic-fields-power-lines

This resource suggests taking precautions and keeping distance or limiting exposure. Residents would no longer have either of these two options per the current proposals if they are living there 24-7.

What You Can Do

If you are concerned about possible health risks from electric and magnetic fields, you can:

- **Increase the distance between yourself and the source.** The greater the distance between you and the source of EMF, the lower your exposure.
- **Limit the time spent around the source.** The less time you spend near EMF, the lower your exposure.

3. ***https://www.fastexpert.com/blog/should-i-buy-a-house-near-power-lines/***

These are points of view from a real estate expert who clearly states that property value declines proportionately to the distance of the property from high tension lines. People have apprehensions whether or not research clearly defines the risk. Potential buyers might have low priority for a property too close to a high tension power line.

4. https://orchard.com/blog/posts/power-lines-and-property-value

Another research on real estate values lowered due to high tension power lines proximity.

Email: NRS-KRS 115 kV T-Line

From: Aman S <sharma.aman@gmail.com>
Sent: Friday, August 30, 2024 2:19 PM
To: NRS-KRS Project; mayorandcouncil@santaclaraca.gov; info@siliconvalleypower.com; planningcommission@santaclaraca.gov; manager@santaclaraca.gov; AJackman@santaclaraca.gov
Subject: Concerns Regarding Upcoming High Power Electric Wire Poles in Our Community for the upcoming SVP project connecting the Northern Receiving Station NRS to Kifer receiving station (KRS)- NRS-KRS 115kV Transmission Line Project

Subject: Concerns Regarding Upcoming High Power Electric Wire Poles in Our Community for the upcoming SVP project connecting the Northern Receiving Station NRS to Kifer receiving station (KRS)- *NRS-KRS 115kV Transmission Line Project*

To Whomsoever it may concern,

We are residents of Santa Clara that will be negatively impacted by the "NRS-KRS 115kV Transmission Line Project". We have collectively reviewed the draft Initial Study/ Mitigated Negative declaration for "NRS-KRS 115kV Transmission Line Project" from July 2024. After reviewing this report and also attending the virtual and in person meetings, here are some references to emphasize our various concerns.

Reference #1 : CEQA's reporting includes these State reviewing agencies: California Air Resources Board (ARB), California Department of Fish and Wildlife, Bay Delta Region 3 (CDFW), California Department of Forestry and Fire Protection (CAL FIRE), California Department of Parks and Recreation, California Department of Toxic Substances Control (DTSC), California Department of Transportation, District 4 (DOT), California Department of Transportation, Division of Aeronautics (DOT), California Department of Transportation, Division of Transportation Planning (DOT), California Department of Water Resources (DWR), California Energy Commission, California Highway Patrol (CHP), California Native American Heritage Commission (NAHC), California Natural Resources Agency, California Public Utilities Commission (CPUC), California Regional Water Quality Control Board, San Francisco Bay Region 2 (RWQCB), Office of Historic Preservation, State Water Resources Control Board, Division of Drinking Water.

Personal observation#1 : *None of these agencies has any association with human health. CEQA reporting is not qualified enough to force the public to compromise on health concerns. Other agencies need to be involved to review this proposal, that are qualified to study the effect on " humans", not just wildlife and vegetation, or " environment. The checklist is completely devoid of our gravest humanitarian concerns. It is quite shocking that the project has not included any study to understand the potential impact of EMF waves on human lives, given that the transmission lines are potentially less than 60 feet from the closest dwellings. The city of Santa Clara needs to step in and have third party/ independent studies completed in favor of human health.*

Reference #2: Page 41 of report- Section 4.15. Electric and Magnetic Fields summary.

Personal observation#2 : *This consideration was completely absent earlier. Only after the residents raised their voices, this section was added. To our greatest disappointment, this section is copied over from an older report on the "South Loop Reconfiguration Project" from 2020. One would have expected that a new study would have been conducted for a project this size. The lack of due diligence and ignorance towards the specifics of this project are apparent and not acceptable. In fact we have found several sections of this older report as being reused across the entire report.*

1

The EMP map shared during the in person meeting had several flaws and we would like to question the viability of the study that was completed. What time of the day was the study completed and on what models were the values based on since these were done on assumption for the EMF values that would be there once the project is complete. Since we have seen the several sections of the report redundantly copied over from other reports, we would like a more detailed analysis of this report.

Regarding EMF concerns for human health, there are plenty of scientific studies that do indicate the grave concern on human health with EMF exposures and we cannot ignore this aspect. Here is a reference to an article and there are plenty of articles listed here under references:

https://psc.wi.gov/Documents/Brochures/EMF.pdf

There are not enough references listed in the draft report provided to us, and the explanation provided seems to be conveniently using studies that prove otherwise. This needs more investigation and references. The solution provided as raising the height of the poles and increasing the distance is non-existent. It was confirmed during the in person meeting that the design will not be altered and the height was already designed as required according to the SVP team present there. It seems that the preparers of this report did not even read the report after copying pasting from the old report as evident in the list of proposed solutions is not applicable here.

The live presentation on August 22nd showed the comparison of EMF values of household objects as a means to show that everyday household items carry a similar range of mG(milli Gauss) units. This comparison was inherently flawed since it mentioned that the household devices were producing those level at 1 feet while those indicated for 115KVf lines were at 60 feet. further these household devices do not operate 24X7 similar to the transmission lines.

There were a lot of citations of reports showcasing that no clear proof of EMF to human health exists but we would like to also point out certain states like Connecticut Department of Public Health have cited reports that have shown an increased incidence of childhood leukemia(Blood cancer) at avg exposure of only 3 mG. Also they have called out that some utility workers exposed to high levels of emf have increase risks of Lur Gehrig's disease.

They also call out that most impacts of EMF from high voltage lines dissipate at ~300 feet. These are available on Page 2 & Page 3 of this report: https://portal.ct.gov/-/media/departments-and-agencies/dph/dph/environmental_health/eoha/pdf/emffactsheet2008pdf.pdf

This report has citations from WHO , National Institute of Environmental Health Sciences and California Department of Health Services.

https://www.niehs.nih.gov/sites/default/files/health/materials/electric_and_magnetic_fields_associated_with_the_use_of_electric_power_questions_and_answers_english_508.pdf

Some other questions around the EMF study map shared during presentation on Aug 22 2024:

1. Have you conducted an existing EMF study to identify the current value of the community ?

2. Are your emf study values based on the cumulative, or interference of existing emf and potential emf.

3. Emf value was calculated based on existing studies. What was the delta between mathematical modeling and actual values (from existing structures).

4. What is the delta between underground and overhead structures' emf values?

5. Can you provide the same for Route options B and C?

2

6. What happens when electrification of rail lines happens- as this is already planned for the future? Have you potentially considered the cumulative EMF effect in coexistence of the high power lines and with railway lines' electrification? Will the EMF values not be much higher then?

7. Can you share the mathematical modeling maps of Emf for 115k, 230k and the next two higher values of the power line ?

8. Can you share Emf maps from existing structures of 115k, 230 k and the next 2 higher values of the power line?

9. Please share any emf related information that you have especially if it contains assumptions for any calculations so we can understand the effects of current project and future projects.

10. Why does the electric pole structure proposed have wider diameter at the top? Can you share the design of the top of the pole ? Can it be extended by adding another section by bolting, welding or any other method? If so, what extra voltage can be added to the line?

11. what is the proposed power consumption of 95054 zip code for the next 5, 10 and 15 years in the master plan ?

Reference #3

Page 174- Section 5.21- Corona and induced current effect:

Personal observation#3

The railway line's proximity to the proposed high transmission lines is very concerning. The centerline distance from proposed lines to railway line is aproximately 50 feet per google maps with some margin for error. As per the report there are no Corona rings proposed for the 115KV lines. There seems to be negligence in design in consideration of the hazards posed by these high voltage lines as Corona effect can transfer current to railway lines. All the residents are at a high risk of accidental hazards given the proximity of the railway line, this project is adding on to the hazards. This section is only stating information about what Corona effect is, as may be required by law, which by the way is again a copy paste from an old report. The only concern discussed in more depth is the audible noise level. The concerns are presented to imply that this is not significant by stating that 115KV lines pose less than significant risk**.**

Reference #4: Post meeting material from March 19th 2024
@https://santaclara.legistar.com/LegislationDetail.aspx?ID=6582415&GUID=E6E14646-3CF7-4D15-BB98-F18580696012&Options=&Search=

Personal observation#4: At surface level, it looks like Option #A was selected only based on Cost perspective, without any consideration to human health, young children, property values, Corona effect, long term sustainability perspective or any other factors. While its important to understand the results of CEQA study, its extremely critical to understand the negative impact of EMF on the many young children living around the proposed transmission lines. Without extensive research and study on the impact to young children and adult heath, we should not be approving such an incomplete proposal.

Page 6 of this document stated that the preferred route A cost of construction is $9.5 million. In discussions with several real estate agents in the region, I have unanimously found all to agree that the real estate values of residences in close proximity to power lines goes down. Its hard to find potential buyers and most folks refrain from buying a house too close to high power transmission lines. There are 1000 plus residences in the area affected by this project. Even if we were to make very rough assumptions, and assume minimal cost reduction in property values and take an average loss of

3

$100,000 per property in the current year, that goes to $100,000,000 of loss of equity to the public. This is not even accounting the businesses affected by this project. This long explanation was to raise a point that if the selection of route A was saving money to the city, this is costing a huge financial loss to the public, which is not acceptable. This decrease in property values will also directly impact the tax collection by the Santa Clara Assessor and result in lower tax revenue coming into the city of Santa Clara.

Reference #5 : Page 49 of report- Figure 5.1-2. Wall separating residences and Lafayette Street.

Personal observation#5: *The picture is taken conveniently from the other side of the railway line which is actually Kingsbury street, inside a private community and not Lafayette street. This is further away from the proposed SVP lines. This is very misleading; see snapshots taken from Google maps below*

And this is what is included on the report:

4

The Mission Garden Townhome community has no walls as such and the main entry to residences face the road directly and are the most impacted. There are several other single family homes on Lafayette street with the same impact, having an entryway directly on the street. This and including other citations of reusing sections of older reports, is all in all absolutely unacceptable and instills distrust. This further shows incompetency of the agency/ agencies preparing this report.

Conclusion: *This project's initial study needs to expand beyond CEQA for approval from the public. The limited scope of CEQA has failed to address the following concerns we have:*

- *Health hazards due to EMF levels.- This is by far the gravest concern and CEQA is clearly not qualified to study that.*
- *Reduced property values- several references provided below.*
- *Loss of Aesthetic appeal for potential real estate buyers/ new and current businesses.*
- *Increase in audible noise levels during and post construction, which is already high in the area with presence of railway line and air traffic route.*
- *Increased fire hazard/ risk of other accidents.*
- *Induced current on railway lines with close proximity/ corona effect- CEQA report did not clearly address this for a 115KV line.*
- *Economic effect on the community from small to larger scale based on all of the above.*

*We demand further investigation and revisit other routes or proposals to resolve the power needs of the city. We have to ensure our and our kids' health is not at stake in the name of development and infrastructure and are not in agreement for this project to move forward****. We cannot approve this to move forward as of now given the lack of study and absence of a satisfactory solution/ mitigation provided in favor/ assurance to public health.***

Additional References:

Research on effects of EMF on humans:

1. ***https://www.ncbi.nlm.nih.gov/pmc/articles/PMC6025786/***

This research reinforces the concerns of EMF exposure effect on human health.

5

2. https://www.epa.gov/radtown/electric-and-magnetic-fields-power-lines

This resource suggests taking precautions and keeping distance or limiting exposure. Residents would no longer have either of these two options per the current proposals if they are living there 24-7.

What You Can Do

If you are concerned about possible health risks from electric and magnetic fields, you can:

- **Increase the distance between yourself and the source.** The greater the distance between you and the source of EMF, the lower your exposure.
- **Limit the time spent around the source.** The less time you spend near EMF, the lower your exposure.

3. ***https://www.fastexpert.com/blog/should-i-buy-a-house-near-power-lines/***

These are points of view from a real estate expert who clearly states that property value declines proportionately to the distance of the property from high tension lines. People have apprehensions whether or not research clearly defines the risk. Potential buyers might have low priority for a property too close to a high tension power line.

4. https://orchard.com/blog/posts/power-lines-and-property-value

Another research on real estate values lowered due to high tension power lines proximity.

Email: NRS-KRS 115 kV T-Line

From: Aruna Pothukuchi <aruna305@gmail.com>
Sent: Saturday, August 31, 2024 12:01 AM
To: NRS-KRS Project; mayorandcouncil@santaclaraca.gov; info@siliconvalleypower.com; planningcommission@santaclaraca.gov; manager@santaclaraca.gov; AJackman@santaclaraca.gov
Subject: Concerns Regarding Upcoming High Power Electric Wire Poles in Our Community for the upcoming SVP project connecting the Northern Receiving Station NRS to Kifer receiving station (KRS)- NRS-KRS 115kV Transmission Line Project

To Whomsoever it may concern,

We are residents of Santa Clara that will be negatively impacted by the "NRS-KRS 115kV Transmission Line Project". We have collectively reviewed the draft Initial Study/ Mitigated Negative declaration for "NRS-KRS 115kV Transmission Line Project" from July 2024. After reviewing this report and also attending the virtual and in person meetings, here are some references to emphasize our various concerns.

Reference #1 : CEQA's reporting includes these State reviewing agencies: California Air Resources Board (ARB), California Department of Fish and Wildlife, Bay Delta Region 3 (CDFW), California Department of Forestry and Fire Protection (CAL FIRE), California Department of Parks and Recreation, California Department of Toxic Substances Control (DTSC), California Department of Transportation, District 4 (DOT), California Department of Transportation, Division of Aeronautics (DOT), California Department of Transportation, Division of Transportation Planning (DOT), California Department of Water Resources (DWR), California Energy Commission, California Highway Patrol (CHP), California Native American Heritage Commission (NAHC), California Natural Resources Agency, California Public Utilities Commission (CPUC), California Regional Water Quality Control Board, San Francisco Bay Region 2 (RWQCB), Office of Historic Preservation, State Water Resources Control Board, Division of Drinking Water.

Personal observation#1 : *None of these agencies has any association with human health. CEQA reporting is not qualified enough to force the public to compromise on health concerns. Other agencies need to be involved to review this proposal, that are qualified to study the effect on " humans", not just wildlife and vegetation, or " environment. The checklist is completely devoid of our gravest humanitarian concerns. It is quite shocking that the project has not included any study to understand the potential impact of EMF waves on human lives, given that the transmission lines are potentially less than 60 feet from the closest dwellings. The city of Santa Clara needs to step in and have third party/ independent studies completed in favor of human health.*

Reference #2: Page 41 of report- Section 4.15. Electric and Magnetic Fields summary.

Personal observation#2 : *This consideration was completely absent earlier. Only after the residents raised their voices, this section was added. To our greatest disappointment, this section is copied over from an older report on the "South Loop Reconfiguration Project" from 2020. One would have expected that a new study would have been conducted for a project this size. The lack of due diligence and ignorance towards the specifics of this project are apparent and not acceptable. In fact we have found several sections of this older report as being reused across the entire report.*

The EMP map shared during the in person meeting had several flaws and we would like to question the viability of the study that was completed. What time of the day was the study completed and on what models were the values based on since these were done on assumption for the EMF values that would

1

be there once the project is complete. Since we have seen the several sections of the report redundantly copied over from other reports, we would like a more detailed analysis of this report.

Regarding EMF concerns for human health, there are plenty of scientific studies that do indicate the grave concern on human health with EMF exposures and we cannot ignore this aspect. Here is a reference to an article and there are plenty of articles listed here under references:

https://psc.wi.gov/Documents/Brochures/EMF.pdf

There are not enough references listed in the draft report provided to us, and the explanation provided seems to be conveniently using studies that prove otherwise. This needs more investigation and references. The solution provided as raising the height of the poles and increasing the distance is non-existent. It was confirmed during the in person meeting that the design will not be altered and the height was already designed as required according to the SVP team present there. It seems that the preparers of this report did not even read the report after copying pasting from the old report as evident in the list of proposed solutions is not applicable here.

The live presentation on August 22nd showed the comparison of EMF values of household objects as a means to show that everyday household items carry a similar range of mG(milli Gauss) units. This comparison was inherently flawed since it mentioned that the household devices were producing those level at 1 feet while those indicated for 115KVf lines were at 60 feet. further these household devices do not operate 24X7 similar to the transmission lines.

There were a lot of citations of reports showcasing that no clear proof of EMF to human health exists but we would like to also point out certain states like Connecticut Department of Public Health have cited reports that have shown an increased incidence of childhood leukemia(Blood cancer) at avg exposure of only 3 mG. Also they have called out that some utility workers exposed to high levels of emf have increase risks of Lur Gehrig's disease.

They also call out that most impacts of EMF from high voltage lines dissipate at ~300 feet.

These are available on Page 2 & Page 3 of this report: https://portal.ct.gov/-/media/departments-and-agencies/dph/dph/environmental_health/eoha/pdf/emffactsheet2008pdf.pdf

This report has citations from WHO , National Institute of Environmental Health Sciences and California Department of Health Services.

https://www.niehs.nih.gov/sites/default/files/health/materials/electric_and_magnetic_fields_associated_with_the_use_of_electric_power_questions_and_answers_english_508.pdf

Some other questions around the EMF study map shared during presentation on Aug 22 2024:

1. Have you conducted an existing EMF study to identify the current value of the community ?

2. Are your emf study values based on the cumulative, or interference of existing emf and potential emf.

3. Emf value was calculated based on existing studies. What was the delta between mathematical modeling and actual values (from existing structures).

4. What is the delta between underground and overhead structures' emf values?

5. Can you provide the same for Route options B and C?

6. What happens when electrification of rail lines happens- as this is already planned for the future? Have you potentially considered the cumulative EMF effect in coexistence of the high power lines and with railway lines' electrification? Will the EMF values not be much higher then?

2

7. Can you share the mathematical modeling maps of Emf for 115k, 230k and the next two higher values of the power line ?

8. Can you share Emf maps from existing structures of 115k, 230 k and the next 2 higher values of the power line?

9. Please share any emf related information that you have especially if it contains assumptions for any calculations so we can understand the effects of current project and future projects.

10. Why does the electric pole structure proposed have wider diameter at the top? Can you share the design of the top of the pole ? Can it be extended by adding another section by bolting, welding or any other method? If so, what extra voltage can be added to the line?

11. what is the proposed power consumption of 95054 zip code for the next 5, 10 and 15 years in the master plan ?

Reference #3

Page 174- Section 5.21- Corona and induced current effect:

Personal observation#3

The railway line's proximity to the proposed high transmission lines is very concerning. The centerline distance from proposed lines to railway line is aproximately 50 feet per google maps with some margin for error. As per the report there are no Corona rings proposed for the 115KV lines. There seems to be negligence in design in consideration of the hazards posed by these high voltage lines as Corona effect can transfer current to railway lines. All the residents are at a high risk of accidental hazards given the proximity of the railway line, this project is adding on to the hazards. This section is only stating information about what Corona effect is, as may be required by law, which by the way is again a copy paste from an old report. The only concern discussed in more depth is the audible noise level. The concerns are presented to imply that this is not significant by stating that 115KV lines pose less than significant risk**.**

Reference #4: Post meeting material from March 19th 2024
@https://santaclara.legistar.com/LegislationDetail.aspx?ID=6582415&GUID=E6E14646-3CF7-4D15-BB98-F18580696012&Options=&Search=

Personal observation#4: At surface level, it looks like Option #A was selected only based on Cost perspective, without any consideration to human health, young children, property values, Corona effect, long term sustainability perspective or any other factors. While its important to understand the results of CEQA study, its extremely critical to understand the negative impact of EMF on the many young children living around the proposed transmission lines. Without extensive research and study on the impact to young children and adult heath, we should not be approving such an incomplete proposal.

Page 6 of this document stated that the preferred route A cost of construction is $9.5 million. In discussions with several real estate agents in the region, I have unanimously found all to agree that the real estate values of residences in close proximity to power lines goes down. Its hard to find potential buyers and most folks refrain from buying a house too close to high power transmission lines. There are 1000 plus residences in the area affected by this project. Even if we were to make very rough assumptions, and assume minimal cost reduction in property values and take an average loss of $100,000 per property in the current year, that goes to $100,000,000 of loss of equity to the public. This is not even accounting the businesses affected by this project. This long explanation was to raise a point that if the selection of route A was saving money to the city, this is costing a huge financial loss to the

public, which is not acceptable. This decrease in property values will also directly impact the tax collection by the Santa Clara Assessor and result in lower tax revenue coming into the city of Santa Clara.

Reference #5 : Page 49 of report- Figure 5.1-2. Wall separating residences and Lafayette Street.

Personal observation#5: *The picture is taken conveniently from the other side of the railway line which is actually Kingsbury street, inside a private community and not Lafayette street. This is further away from the proposed SVP lines. This is very misleading; see snapshots taken from Google maps below*

4

And this is what is included on the report:

Figure 5.1-2. Wall Separating Residences and Lafayette Street

Figure 5.1-2

Wall Separating Residences and Lafayette Street

The Mission Garden Townhome community has no walls as such and the main entry to residences face the road directly and are the most impacted. There are several other single family homes on Lafayette street with the same impact, having an entryway directly on the street. This and including other citations of reusing sections of older reports, is all in all absolutely unacceptable and instills distrust. This further shows incompetency of the agency/ agencies preparing this report.

Conclusion: *This project's initial study needs to expand beyond CEQA for approval from the public. The limited scope of CEQA has failed to address the following concerns we have:*

- *Health hazards due to EMF levels.- This is by far the gravest concern and CEQA is clearly not qualified to study that.*
- *Reduced property values- several references provided below.*
- *Loss of Aesthetic appeal for potential real estate buyers/ new and current businesses.*
- *Increase in audible noise levels during and post construction, which is already high in the area with presence of railway line and air traffic route.*
- *Increased fire hazard/ risk of other accidents.*
- *Induced current on railway lines with close proximity/ corona effect- CEQA report did not clearly address this for a 115KV line.*
- *Economic effect on the community from small to larger scale based on all of the above.*

We demand further investigation and revisit other routes or proposals to resolve the power needs of the city. We have to ensure our and our kids' health is not at stake in the name of development and infrastructure and are not in agreement for this project to move forward. ***We cannot approve this to move forward as of now given the lack of study and absence of a satisfactory solution/ mitigation provided in favor/ assurance to public health.***

Additional References:

Research on effects of EMF on humans:

1. ***https://www.ncbi.nlm.nih.gov/pmc/articles/PMC6025786/***

This research reinforces the concerns of EMF exposure effect on human health.

2. ***https://www.epa.gov/radtown/electric-and-magnetic-fields-power-lines***

This resource suggests taking precautions and keeping distance or limiting exposure. Residents would no longer have either of these two options per the current proposals if they are living there 24-7.

What You Can Do

If you are concerned about possible health risks from electric and magnetic fields, you can:

- **Increase the distance between yourself and the source.** The greater the distance between you and the source of EMF, the lower your exposure.
- **Limit the time spent around the source.** The less time you spend near EMF, the lower your exposure.

3. ***https://www.fastexpert.com/blog/should-i-buy-a-house-near-power-lines/***

These are points of view from a real estate expert who clearly states that property value declines proportionately to the distance of the property from high tension lines. People have apprehensions whether or not research clearly defines the risk. Potential buyers might have low priority for a property too close to a high tension power line.

4. ***https://orchard.com/blog/posts/power-lines-and-property-value***

Another research on real estate values lowered due to high tension power lines proximity.

Email: NRS-KRS 115 kV T-Line

From: Fang Gong <gongfang2008@gmail.com>
Sent: Saturday, August 3, 2024 9:10 PM
To: NRS-KRS Project
Subject: Objection to Proposed 115 kV Transmission Line Project

Hello,

I'm a resident in the Hogan Dr neighborhood, which is impacted by this project. I am writing to express my objection to Silicon Valley Power's (SVP) proposed construction of a new 115 kilovolt (kV) transmission line within the northeastern area of the City of Santa Clara, connecting the Northern Receiving Station (NRS) and Kifer Receiving Station (KRS).

While I understand the need to facilitate energy redistribution and accommodate projected load growth, I have several significant concerns about the impact of this project on our community:

1. **Aesthetic and Property Value Impact on Hogan Drive**: The installation of overhead transmission lines with poles along Lafayette Street will significantly damage the street view of this neighborhood. This visual intrusion is likely to negatively impact property values, as prospective homeowners and residents generally prefer neighborhoods free of such industrial infrastructure. The presence of these poles and lines could deter potential buyers and reduce the appeal of our community.
2. **Traffic Disruptions on Lafayette Street**: The construction phase will necessitate traffic control measures and potential lane closures on Lafayette Street. This will cause considerable inconvenience to residents for more than a year. Daily commutes, local business operations, and general mobility within the area will be severely affected. The prolonged construction period could also lead to increased traffic congestion and heightened safety risks for both drivers and pedestrians.
3. **Environmental Concerns**: The construction and maintenance of the transmission lines may have detrimental effects on the local environment. Additionally, the long-term visual pollution from overhead lines could detract from the natural beauty and character of our community.
4. **Health and Safety Risks**: There are ongoing concerns regarding the health and safety implications of living in close proximity to high-voltage transmission lines. While the scientific community continues to study the potential health effects, the perceived risks can cause significant anxiety among residents. Ensuring that our community feels safe and secure should be a top priority.
5. **Alternative Solutions**: I urge SVP to consider alternative solutions that could mitigate these concerns. For example, underground transmission lines, although potentially more costly initially, would preserve the visual aesthetics of our neighborhood, reduce environmental disruption, and avoid the health and safety concerns associated with overhead lines.

In light of these issues, I strongly urge SVP to reconsider the current proposal and explore less disruptive alternatives that will better serve both the technical needs and the well-being of our community. I am confident that with thoughtful planning and community engagement, we can arrive at a solution that balances progress with the preservation of our neighborhood's character and quality of life.

Thank you for your attention to these concerns. I hope to see a revised proposal that addresses these critical issues.

Sincerely,

Fang

Email: NRS-KRS 115 kV T-Line

From: Sriharish Pisipati <pisipati.harish@gmail.com>
Sent: Friday, August 30, 2024 11:59 PM
To: NRS-KRS Project; mayorandcouncil@santaclaraca.gov; info@siliconvalleypower.com; planningcommission@santaclaraca.gov; manager@santaclaraca.gov; AJackman@santaclaraca.gov
Subject: Concerns Regarding Upcoming High Power Electric Wire Poles in Our Community for the upcoming SVP project connecting the Northern Receiving Station NRS to Kifer receiving station (KRS)- NRS-KRS 115kV Transmission Line Project

To Whomsoever it may concern,

We are residents of Santa Clara that will be negatively impacted by the "NRS-KRS 115kV Transmission Line Project". We have collectively reviewed the draft Initial Study/ Mitigated Negative declaration for "NRS-KRS 115kV Transmission Line Project" from July 2024. After reviewing this report and also attending the virtual and in person meetings, here are some references to emphasize our various concerns.

Reference #1 : CEQA's reporting includes these State reviewing agencies: California Air Resources Board (ARB), California Department of Fish and Wildlife, Bay Delta Region 3 (CDFW), California Department of Forestry and Fire Protection (CAL FIRE), California Department of Parks and Recreation, California Department of Toxic Substances Control (DTSC), California Department of Transportation, District 4 (DOT), California Department of Transportation, Division of Aeronautics (DOT), California Department of Transportation, Division of Transportation Planning (DOT), California Department of Water Resources (DWR), California Energy Commission, California Highway Patrol (CHP), California Native American Heritage Commission (NAHC), California Natural Resources Agency, California Public Utilities Commission (CPUC), California Regional Water Quality Control Board, San Francisco Bay Region 2 (RWQCB), Office of Historic Preservation, State Water Resources Control Board, Division of Drinking Water.

Personal observation#1 : *None of these agencies has any association with human health. CEQA reporting is not qualified enough to force the public to compromise on health concerns. Other agencies need to be involved to review this proposal, that are qualified to study the effect on " humans", not just wildlife and vegetation, or " environment. The checklist is completely devoid of our gravest humanitarian concerns. It is quite shocking that the project has not included any study to understand the potential impact of EMF waves on human lives, given that the transmission lines are potentially less than 60 feet from the closest dwellings. The city of Santa Clara needs to step in and have third party/ independent studies completed in favor of human health.*

Reference #2: Page 41 of report- Section 4.15. Electric and Magnetic Fields summary.

Personal observation#2 : *This consideration was completely absent earlier. Only after the residents raised their voices, this section was added. To our greatest disappointment, this section is copied over from an older report on the "South Loop Reconfiguration Project" from 2020. One would have expected that a new study would have been conducted for a project this size. The lack of due diligence and ignorance towards the specifics of this project are apparent and not acceptable. In fact we have found several sections of this older report as being reused across the entire report.*

The EMP map shared during the in person meeting had several flaws and we would like to question the viability of the study that was completed. What time of the day was the study completed and on what models were the values based on since these were done on assumption for the EMF values that would

1

be there once the project is complete. Since we have seen the several sections of the report redundantly copied over from other reports, we would like a more detailed analysis of this report.

Regarding EMF concerns for human health, there are plenty of scientific studies that do indicate the grave concern on human health with EMF exposures and we cannot ignore this aspect. Here is a reference to an article and there are plenty of articles listed here under references:

https://psc.wi.gov/Documents/Brochures/EMF.pdf

There are not enough references listed in the draft report provided to us, and the explanation provided seems to be conveniently using studies that prove otherwise. This needs more investigation and references. The solution provided as raising the height of the poles and increasing the distance is non-existent. It was confirmed during the in person meeting that the design will not be altered and the height was already designed as required according to the SVP team present there. It seems that the preparers of this report did not even read the report after copying pasting from the old report as evident in the list of proposed solutions is not applicable here.

The live presentation on August 22nd showed the comparison of EMF values of household objects as a means to show that everyday household items carry a similar range of mG(milli Gauss) units. This comparison was inherently flawed since it mentioned that the household devices were producing those level at 1 feet while those indicated for 115KVf lines were at 60 feet. further these household devices do not operate 24X7 similar to the transmission lines.

There were a lot of citations of reports showcasing that no clear proof of EMF to human health exists but we would like to also point out certain states like Connecticut Department of Public Health have cited reports that have shown an increased incidence of childhood leukemia(Blood cancer) at avg exposure of only 3 mG. Also they have called out that some utility workers exposed to high levels of emf have increase risks of Lur Gehrig's disease.

They also call out that most impacts of EMF from high voltage lines dissipate at ~300 feet.

These are available on Page 2 & Page 3 of this report: https://portal.ct.gov/-/media/departments-and-agencies/dph/dph/environmental_health/eoha/pdf/emffactsheet2008pdf.pdf

This report has citations from WHO , National Institute of Environmental Health Sciences and California Department of Health Services.

https://www.niehs.nih.gov/sites/default/files/health/materials/electric_and_magnetic_fields_associated_with_the_use_of_electric_power_questions_and_answers_english_508.pdf

Some other questions around the EMF study map shared during presentation on Aug 22 2024:

1. Have you conducted an existing EMF study to identify the current value of the community ?

2. Are your emf study values based on the cumulative, or interference of existing emf and potential emf.

3. Emf value was calculated based on existing studies. What was the delta between mathematical modeling and actual values (from existing structures).

4. What is the delta between underground and overhead structures' emf values?

5. Can you provide the same for Route options B and C?

6. What happens when electrification of rail lines happens- as this is already planned for the future? Have you potentially considered the cumulative EMF effect in coexistence of the high power lines and with railway lines' electrification? Will the EMF values not be much higher then?

2

7. Can you share the mathematical modeling maps of Emf for 115k, 230k and the next two higher values of the power line ?

8. Can you share Emf maps from existing structures of 115k, 230 k and the next 2 higher values of the power line?

9. Please share any emf related information that you have especially if it contains assumptions for any calculations so we can understand the effects of current project and future projects.

10. Why does the electric pole structure proposed have wider diameter at the top? Can you share the design of the top of the pole ? Can it be extended by adding another section by bolting, welding or any other method? If so, what extra voltage can be added to the line?

11. what is the proposed power consumption of 95054 zip code for the next 5, 10 and 15 years in the master plan ?

Reference #3

Page 174- Section 5.21- Corona and induced current effect:

Personal observation#3

The railway line's proximity to the proposed high transmission lines is very concerning. The centerline distance from proposed lines to railway line is aproximately 50 feet per google maps with some margin for error. As per the report there are no Corona rings proposed for the 115KV lines. There seems to be negligence in design in consideration of the hazards posed by these high voltage lines as Corona effect can transfer current to railway lines. All the residents are at a high risk of accidental hazards given the proximity of the railway line, this project is adding on to the hazards. This section is only stating information about what Corona effect is, as may be required by law, which by the way is again a copy paste from an old report. The only concern discussed in more depth is the audible noise level. The concerns are presented to imply that this is not significant by stating that 115KV lines pose less than significant risk**.**

Reference #4: Post meeting material from March 19th 2024
@https://santaclara.legistar.com/LegislationDetail.aspx?ID=6582415&GUID=E6E14646-3CF7-4D15-BB98-F18580696012&Options=&Search=

Personal observation#4: At surface level, it looks like Option #A was selected only based on Cost perspective, without any consideration to human health, young children, property values, Corona effect, long term sustainability perspective or any other factors. While its important to understand the results of CEQA study, its extremely critical to understand the negative impact of EMF on the many young children living around the proposed transmission lines. Without extensive research and study on the impact to young children and adult heath, we should not be approving such an incomplete proposal.

Page 6 of this document stated that the preferred route A cost of construction is $9.5 million. In discussions with several real estate agents in the region, I have unanimously found all to agree that the real estate values of residences in close proximity to power lines goes down. Its hard to find potential buyers and most folks refrain from buying a house too close to high power transmission lines. There are 1000 plus residences in the area affected by this project. Even if we were to make very rough assumptions, and assume minimal cost reduction in property values and take an average loss of $100,000 per property in the current year, that goes to $100,000,000 of loss of equity to the public. This is not even accounting the businesses affected by this project. This long explanation was to raise a point that if the selection of route A was saving money to the city, this is costing a huge financial loss to the

public, which is not acceptable. This decrease in property values will also directly impact the tax collection by the Santa Clara Assessor and result in lower tax revenue coming into the city of Santa Clara.

Reference #5 : Page 49 of report- Figure 5.1-2. Wall separating residences and Lafayette Street.

Personal observation#5: *The picture is taken conveniently from the other side of the railway line which is actually Kingsbury street, inside a private community and not Lafayette street. This is further away from the proposed SVP lines. This is very misleading; see snapshots taken from Google maps below*

4

And this is what is included on the report:

Figure 5.1-2. Wall Separating Residences and Lafayette Street

Figure 5.1-2

Wall Separating Residences and Lafayette Street

The Mission Garden Townhome community has no walls as such and the main entry to residences face the road directly and are the most impacted. There are several other single family homes on Lafayette street with the same impact, having an entryway directly on the street. This and including other citations of reusing sections of older reports, is all in all absolutely unacceptable and instills distrust. This further shows incompetency of the agency/ agencies preparing this report.

Conclusion: *This project's initial study needs to expand beyond CEQA for approval from the public. The limited scope of CEQA has failed to address the following concerns we have:*

- *Health hazards due to EMF levels.- This is by far the gravest concern and CEQA is clearly not qualified to study that.*
- *Reduced property values- several references provided below.*
- *Loss of Aesthetic appeal for potential real estate buyers/ new and current businesses.*
- *Increase in audible noise levels during and post construction, which is already high in the area with presence of railway line and air traffic route.*
- *Increased fire hazard/ risk of other accidents.*
- *Induced current on railway lines with close proximity/ corona effect- CEQA report did not clearly address this for a 115KV line.*
- *Economic effect on the community from small to larger scale based on all of the above.*

*We demand further investigation and revisit other routes or proposals to resolve the power needs of the city. We have to ensure our and our kids' health is not at stake in the name of development and infrastructure and are not in agreement for this project to move forward****. We cannot approve this to move forward as of now given the lack of study and absence of a satisfactory solution/ mitigation provided in favor/ assurance to public health.***

5

Additional References:

Research on effects of EMF on humans:

1. ***https://www.ncbi.nlm.nih.gov/pmc/articles/PMC6025786/***

This research reinforces the concerns of EMF exposure effect on human health.

2. ***https://www.epa.gov/radtown/electric-and-magnetic-fields-power-lines***

This resource suggests taking precautions and keeping distance or limiting exposure. Residents would no longer have either of these two options per the current proposals if they are living there 24-7.

What You Can Do

If you are concerned about possible health risks from electric and magnetic fields, you can:

- **Increase the distance between yourself and the source.** The greater the distance between you and the source of EMF, the lower your exposure.
- **Limit the time spent around the source.** The less time you spend near EMF, the lower your exposure.

3. ***https://www.fastexpert.com/blog/should-i-buy-a-house-near-power-lines/***

These are points of view from a real estate expert who clearly states that property value declines proportionately to the distance of the property from high tension lines. People have apprehensions whether or not research clearly defines the risk. Potential buyers might have low priority for a property too close to a high tension power line.

4. ***https://orchard.com/blog/posts/power-lines-and-property-value***

Another research on real estate values lowered due to high tension power lines proximity.

Email: NRS-KRS 115 kV T-Line

From: saurabh sharma <tosaurabhsharma@gmail.com>
Sent: Friday, August 30, 2024 6:50 PM
To: NRS-KRS Project; mayorandcouncil@santaclaraca.gov; info@siliconvalleypower.com; planningcommission@santaclaraca.gov; manager@santaclaraca.gov; AJackman@santaclaraca.gov
Subject: Concerns Regarding Upcoming High Power Electric Wire Poles in Our Community for the upcoming SVP project connecting the Northern Receiving Station NRS to Kifer receiving station (KRS)- NRS-KRS 115kV Transmission Line Project

To Whomsoever it may concern,
We are residents of Santa Clara that will be negatively impacted by the "NRS-KRS 115kV Transmission Line Project". We have collectively reviewed the draft Initial Study/ Mitigated Negative declaration for "NRS-KRS 115kV Transmission Line Project" from July 2024. After reviewing this report and also attending the virtual and in person meetings, here are some references to emphasize our various concerns.
Reference #1 : CEQA's reporting includes these State reviewing agencies: California Air Resources Board (ARB), California Department of Fish and Wildlife, Bay Delta Region 3 (CDFW), California Department of Forestry and Fire Protection (CAL FIRE), California Department of Parks and Recreation, California Department of Toxic Substances Control (DTSC), California Department of Transportation, District 4 (DOT), California Department of Transportation, Division of Aeronautics (DOT), California Department of Transportation, Division of Transportation Planning (DOT), California Department of Water Resources (DWR), California Energy Commission, California Highway Patrol (CHP), California Native American Heritage Commission (NAHC), California Natural Resources Agency, California Public Utilities Commission (CPUC), California Regional Water Quality Control Board, San Francisco Bay Region 2 (RWQCB), Office of Historic Preservation, State Water Resources Control Board, Division of Drinking Water.
Personal observation#1 : *None of these agencies has any association with human health. CEQA reporting is not qualified enough to force the public to compromise on health concerns. Other agencies need to be involved to review this proposal, that are qualified to study the effect on " humans", not just wildlife and vegetation, or " environment. The checklist is completely devoid of our gravest humanitarian concerns. It is quite shocking that the project has not included any study to understand the potential impact of EMF waves on human lives, given that the transmission lines are potentially less than 60 feet from the closest dwellings. The city of Santa Clara needs to step in and have third party/ independent studies completed in favor of human health.*
Reference #2: Page 41 of report- Section 4.15. Electric and Magnetic Fields summary.
Personal observation#2 : *This consideration was completely absent earlier. Only after the residents raised their voices, this section was added. To our greatest disappointment, this section is copied over from an older report on the "South Loop Reconfiguration Project" from 2020. One would have expected that a new study would have been conducted for a project this size. The lack of due diligence and ignorance towards the specifics of this project are apparent and not acceptable. In fact we have found several sections of this older report as being reused across the entire report.*
The EMP map shared during the in person meeting had several flaws and we would like to question the viability of the study that was completed. What time of the day was the study completed and on what models were the values based on since these were done on assumption for the EMF values that would be there once the project is complete. Since we have seen the several sections of the report redundantly copied over from other reports, we would like a more detailed analysis of this report.
Regarding EMF concerns for human health, there are plenty of scientific studies that do indicate the grave concern on human health with EMF exposures and we cannot ignore this aspect. Here is a reference to an article and there are plenty of articles listed here under references:
https://psc.wi.gov/Documents/Brochures/EMF.pdf

1

There are not enough references listed in the draft report provided to us, and the explanation provided seems to be conveniently using studies that prove otherwise. This needs more investigation and references. The solution provided as raising the height of the poles and increasing the distance is non-existent. It was confirmed during the in person meeting that the design will not be altered and the height was already designed as required according to the SVP team present there. It seems that the preparers of this report did not even read the report after copying pasting from the old report as evident in the list of proposed solutions is not applicable here.

The live presentation on August 22nd showed the comparison of EMF values of household objects as a means to show that everyday household items carry a similar range of mG(milli Gauss) units. This comparison was inherently flawed since it mentioned that the household devices were producing those level at 1 feet while those indicated for 115KVf lines were at 60 feet. further these household devices do not operate 24X7 similar to the transmission lines.

There were a lot of citations of reports showcasing that no clear proof of EMF to human health exists but we would like to also point out certain states like Connecticut Department of Public Health have cited reports that have shown an increased incidence of childhood leukemia(Blood cancer) at avg exposure of only 3 mG. Also they have called out that some utility workers exposed to high levels of emf have increase risks of Lur Gehrig's disease.

They also call out that most impacts of EMF from high voltage lines dissipate at ~300 feet.

These are available on Page 2 & Page 3 of this report: https://portal.ct.gov/-/media/departments-and-agencies/dph/dph/environmental_health/eoha/pdf/emffactsheet2008pdf.pdf

This report has citations from WHO , National Institute of Environmental Health Sciences and California Department of Health Services.

https://www.niehs.nih.gov/sites/default/files/health/materials/electric_and_magnetic_fields_associated_with_the_use_of_electric_power_questions_and_answers_english_508.pdf

Some other questions around the EMF study map shared during presentation on Aug 22 2024:

1. Have you conducted an existing EMF study to identify the current value of the community ?
2. Are your emf study values based on the cumulative, or interference of existing emf and potential emf.
3. Emf value was calculated based on existing studies. What was the delta between mathematical modeling and actual values (from existing structures).
4. What is the delta between underground and overhead structures' emf values?
5. Can you provide the same for Route options B and C?
6. What happens when electrification of rail lines happens- as this is already planned for the future? Have you potentially considered the cumulative EMF effect in coexistence of the high power lines and with railway lines' electrification? Will the EMF values not be much higher then?
7. Can you share the mathematical modeling maps of Emf for 115k, 230k and the next two higher values of the power line ?
8. Can you share Emf maps from existing structures of 115k, 230 k and the next 2 higher values of the power line?
9. Please share any emf related information that you have especially if it contains assumptions for any calculations so we can understand the effects of current project and future projects.
10. Why does the electric pole structure proposed have wider diameter at the top? Can you share the design of the top of the pole ? Can it be extended by adding another section by bolting, welding or any other method? If so, what extra voltage can be added to the line?
11. what is the proposed power consumption of 95054 zip code for the next 5, 10 and 15 years in the master plan ?

Reference #3

Page 174- Section 5.21- Corona and induced current effect:

Personal observation#3

The railway line's proximity to the proposed high transmission lines is very concerning. The centerline distance from proposed lines to railway line is aproximately 50 feet per google maps with some margin for error. As per the report there are no Corona rings proposed for the 115KV lines. There seems to be negligence in design in consideration of the hazards posed by these high voltage lines as Corona effect

2

can transfer current to railway lines. All the residents are at a high risk of accidental hazards given the proximity of the railway line, this project is adding on to the hazards. This section is only stating information about what Corona effect is, as may be required by law, which by the way is again a copy paste from an old report. The only concern discussed in more depth is the audible noise level. The concerns are presented to imply that this is not significant by stating that 115KV lines pose less than significant risk**.**

Reference #4: Post meeting material from March 19th 2024 @https://santaclara.legistar.com/LegislationDetail.aspx?ID=6582415&GUID=E6E14646-3CF7-4D15-BB98-F18580696012&Options=&Search=

Personal observation#4: At surface level, it looks like Option #A was selected only based on Cost perspective, without any consideration to human health, young children, property values, Corona effect, long term sustainability perspective or any other factors. While its important to understand the results of CEQA study, its extremely critical to understand the negative impact of EMF on the many young children living around the proposed transmission lines. Without extensive research and study on the impact to young children and adult heath, we should not be approving such an incomplete proposal.

Page 6 of this document stated that the preferred route A cost of construction is $9.5 million. In discussions with several real estate agents in the region, I have unanimously found all to agree that the real estate values of residences in close proximity to power lines goes down. Its hard to find potential buyers and most folks refrain from buying a house too close to high power transmission lines. There are 1000 plus residences in the area affected by this project. Even if we were to make very rough assumptions, and assume minimal cost reduction in property values and take an average loss of $100,000 per property in the current year, that goes to $100,000,000 of loss of equity to the public. This is not even accounting the businesses affected by this project. This long explanation was to raise a point that if the selection of route A was saving money to the city, this is costing a huge financial loss to the public, which is not acceptable. This decrease in property values will also directly impact the tax collection by the Santa Clara Assessor and result in lower tax revenue coming into the city of Santa Clara.

Reference #5 : Page 49 of report- Figure 5.1-2. Wall separating residences and Lafayette Street.

Personal observation#5: *The picture is taken conveniently from the other side of the railway line which is actually Kingsbury street, inside a private community and not Lafayette street. This is further away from the proposed SVP lines. This is very misleading; see snapshots taken from Google maps below*

3

And this is what is included on the report:

The Mission Garden Townhome community has no walls as such and the main entry to residences face the road directly and are the most impacted. There are several other single family homes on Lafayette street with the same impact, having an entryway directly on the street. This and including other citations of reusing sections of older reports, is all in all absolutely unacceptable and instills distrust. This further shows incompetency of the agency/ agencies preparing this report.

Conclusion: *This project's initial study needs to expand beyond CEQA for approval from the public. The limited scope of CEQA has failed to address the following concerns we have:*

- *Health hazards due to EMF levels.- This is by far the gravest concern and CEQA is clearly not qualified to study that.*
- *Reduced property values- several references provided below.*
- *Loss of Aesthetic appeal for potential real estate buyers/ new and current businesses.*
- *Increase in audible noise levels during and post construction, which is already high in the area with presence of railway line and air traffic route.*
- *Increased fire hazard/ risk of other accidents.*
- *Induced current on railway lines with close proximity/ corona effect- CEQA report did not clearly address this for a 115KV line.*
- *Economic effect on the community from small to larger scale based on all of the above.*

We demand further investigation and revisit other routes or proposals to resolve the power needs of the city. We have to ensure our and our kids' health is not at stake in the name of development and

4

*infrastructure and are not in agreement for this project to move forward**. We cannot approve this to move forward as of now given the lack of study and absence of a satisfactory solution/ mitigation provided in favor/ assurance to public health.***

Additional References:
Research on effects of EMF on humans:
1. ***https://www.ncbi.nlm.nih.gov/pmc/articles/PMC6025786/***
This research reinforces the concerns of EMF exposure effect on human health.
2. ***https://www.epa.gov/radtown/electric-and-magnetic-fields-power-lines***
This resource suggests taking precautions and keeping distance or limiting exposure. Residents would no longer have either of these two options per the current proposals if they are living there 24-7.

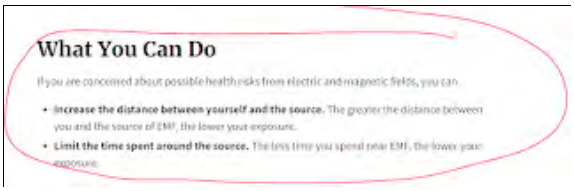
What You Can Do

If you are concerned about possible health risks from electric and magnetic fields, you can

- **Increase the distance between yourself and the source.** The greater the distance between you and the source of EMF, the lower your exposure.
- **Limit the time spent around the source.** The less time you spend near EMF, the lower your exposure.

3. ***https://www.fastexpert.com/blog/should-i-buy-a-house-near-power-lines/***
These are points of view from a real estate expert who clearly states that property value declines proportionately to the distance of the property from high tension lines. People have apprehensions whether or not research clearly defines the risk. Potential buyers might have low priority for a property too close to a high tension power line.
4. ***https://orchard.com/blog/posts/power-lines-and-property-value***
Another research on real estate values lowered due to high tension power lines proximity.

Thanks,
Saurabh Sharma

5

Email: NRS-KRS 115 kV T-Line

From: Saurabh Sharma <mr.vats@gmail.com>
Sent: Friday, August 30, 2024 11:01 PM
To: NRS-KRS Project; mayorandcouncil@santaclaraca.gov; info@siliconvalleypower.com; planningcommission@santaclaraca.gov; manager@santaclaraca.gov; AJackman@santaclaraca.gov
Subject: Concerns Regarding Upcoming High Power Electric Wire Poles in Our Community for the upcoming SVP project connecting the Northern Receiving Station NRS to Kifer receiving station (KRS)- NRS-KRS 115kV Transmission Line Project

To Whomsoever it may concern,
We are residents of Santa Clara that will be negatively impacted by the "NRS-KRS 115kV Transmission Line Project". We have collectively reviewed the draft Initial Study/ Mitigated Negative declaration for "NRS-KRS 115kV Transmission Line Project" from July 2024. After reviewing this report and also attending the virtual and in person meetings, here are some references to emphasize our various concerns.
Reference #1 : CEQA's reporting includes these State reviewing agencies: California Air Resources Board (ARB), California Department of Fish and Wildlife, Bay Delta Region 3 (CDFW), California Department of Forestry and Fire Protection (CAL FIRE), California Department of Parks and Recreation, California Department of Toxic Substances Control (DTSC), California Department of Transportation, District 4 (DOT), California Department of Transportation, Division of Aeronautics (DOT), California Department of Transportation, Division of Transportation Planning (DOT), California Department of Water Resources (DWR), California Energy Commission, California Highway Patrol (CHP), California Native American Heritage Commission (NAHC), California Natural Resources Agency, California Public Utilities Commission (CPUC), California Regional Water Quality Control Board, San Francisco Bay Region 2 (RWQCB), Office of Historic Preservation, State Water Resources Control Board, Division of Drinking Water.
Personal observation#1 : *None of these agencies has any association with human health. CEQA reporting is not qualified enough to force the public to compromise on health concerns. Other agencies need to be involved to review this proposal, that are qualified to study the effect on " humans", not just wildlife and vegetation, or " environment. The checklist is completely devoid of our gravest humanitarian concerns. It is quite shocking that the project has not included any study to understand the potential impact of EMF waves on human lives, given that the transmission lines are potentially less than 60 feet from the closest dwellings. The city of Santa Clara needs to step in and have third party/ independent studies completed in favor of human health.*
Reference #2: Page 41 of report- Section 4.15. Electric and Magnetic Fields summary.
Personal observation#2 : *This consideration was completely absent earlier. Only after the residents raised their voices, this section was added. To our greatest disappointment, this section is copied over from an older report on the "South Loop Reconfiguration Project" from 2020. One would have expected that a new study would have been conducted for a project this size. The lack of due diligence and ignorance towards the specifics of this project are apparent and not acceptable. In fact we have found several sections of this older report as being reused across the entire report.*
The EMP map shared during the in person meeting had several flaws and we would like to question the viability of the study that was completed. What time of the day was the study completed and on what models were the values based on since these were done on assumption for the EMF values that would be there once the project is complete. Since we have seen the several sections of the report redundantly copied over from other reports, we would like a more detailed analysis of this report.
Regarding EMF concerns for human health, there are plenty of scientific studies that do indicate the grave concern on human health with EMF exposures and we cannot ignore this aspect. Here is a reference to an article and there are plenty of articles listed here under references:
https://psc.wi.gov/Documents/Brochures/EMF.pdf

1

There are not enough references listed in the draft report provided to us, and the explanation provided seems to be conveniently using studies that prove otherwise. This needs more investigation and references. The solution provided as raising the height of the poles and increasing the distance is non-existent. It was confirmed during the in person meeting that the design will not be altered and the height was already designed as required according to the SVP team present there. It seems that the preparers of this report did not even read the report after copying pasting from the old report as evident in the list of proposed solutions is not applicable here.

The live presentation on August 22nd showed the comparison of EMF values of household objects as a means to show that everyday household items carry a similar range of mG(milli Gauss) units. This comparison was inherently flawed since it mentioned that the household devices were producing those level at 1 feet while those indicated for 115KVf lines were at 60 feet. further these household devices do not operate 24X7 similar to the transmission lines.

There were a lot of citations of reports showcasing that no clear proof of EMF to human health exists but we would like to also point out certain states like Connecticut Department of Public Health have cited reports that have shown an increased incidence of childhood leukemia(Blood cancer) at avg exposure of only 3 mG. Also they have called out that some utility workers exposed to high levels of emf have increase risks of Lur Gehrig's disease.

They also call out that most impacts of EMF from high voltage lines dissipate at ~300 feet.

These are available on Page 2 & Page 3 of this report: https://portal.ct.gov/-/media/departments-and-agencies/dph/dph/environmental_health/eoha/pdf/emffactsheet2008pdf.pdf

This report has citations from WHO , National Institute of Environmental Health Sciences and California Department of Health Services.

https://www.niehs.nih.gov/sites/default/files/health/materials/electric_and_magnetic_fields_associated_with_the_use_of_electric_power_questions_and_answers_english_508.pdf

Some other questions around the EMF study map shared during presentation on Aug 22 2024:

1. Have you conducted an existing EMF study to identify the current value of the community ?
2. Are your emf study values based on the cumulative, or interference of existing emf and potential emf.
3. Emf value was calculated based on existing studies. What was the delta between mathematical modeling and actual values (from existing structures).
4. What is the delta between underground and overhead structures' emf values?
5. Can you provide the same for Route options B and C?
6. What happens when electrification of rail lines happens- as this is already planned for the future? Have you potentially considered the cumulative EMF effect in coexistence of the high power lines and with railway lines' electrification? Will the EMF values not be much higher then?
7. Can you share the mathematical modeling maps of Emf for 115k, 230k and the next two higher values of the power line ?
8. Can you share Emf maps from existing structures of 115k, 230 k and the next 2 higher values of the power line?
9. Please share any emf related information that you have especially if it contains assumptions for any calculations so we can understand the effects of current project and future projects.
10. Why does the electric pole structure proposed have wider diameter at the top? Can you share the design of the top of the pole ? Can it be extended by adding another section by bolting, welding or any other method? If so, what extra voltage can be added to the line?
11. what is the proposed power consumption of 95054 zip code for the next 5, 10 and 15 years in the master plan ?

Reference #3

Page 174- Section 5.21- Corona and induced current effect:

Personal observation#3

The railway line's proximity to the proposed high transmission lines is very concerning. The centerline distance from proposed lines to railway line is aproximately 50 feet per google maps with some margin for error. As per the report there are no Corona rings proposed for the 115KV lines. There seems to be negligence in design in consideration of the hazards posed by these high voltage lines as Corona effect

2

can transfer current to railway lines. All the residents are at a high risk of accidental hazards given the proximity of the railway line, this project is adding on to the hazards. This section is only stating information about what Corona effect is, as may be required by law, which by the way is again a copy paste from an old report. The only concern discussed in more depth is the audible noise level. The concerns are presented to imply that this is not significant by stating that 115KV lines pose less than significant risk**.**

Reference #4: Post meeting material from March 19th 2024 @https://santaclara.legistar.com/LegislationDetail.aspx?ID=6582415&GUID=E6E14646-3CF7-4D15-BB98-F18580696012&Options=&Search=

Personal observation#4: At surface level, it looks like Option #A was selected only based on Cost perspective, without any consideration to human health, young children, property values, Corona effect, long term sustainability perspective or any other factors. While its important to understand the results of CEQA study, its extremely critical to understand the negative impact of EMF on the many young children living around the proposed transmission lines. Without extensive research and study on the impact to young children and adult heath, we should not be approving such an incomplete proposal.

Page 6 of this document stated that the preferred route A cost of construction is $9.5 million. In discussions with several real estate agents in the region, I have unanimously found all to agree that the real estate values of residences in close proximity to power lines goes down. Its hard to find potential buyers and most folks refrain from buying a house too close to high power transmission lines. There are 1000 plus residences in the area affected by this project. Even if we were to make very rough assumptions, and assume minimal cost reduction in property values and take an average loss of $100,000 per property in the current year, that goes to $100,000,000 of loss of equity to the public. This is not even accounting the businesses affected by this project. This long explanation was to raise a point that if the selection of route A was saving money to the city, this is costing a huge financial loss to the public, which is not acceptable. This decrease in property values will also directly impact the tax collection by the Santa Clara Assessor and result in lower tax revenue coming into the city of Santa Clara.

Reference #5 : Page 49 of report- Figure 5.1-2. Wall separating residences and Lafayette Street.

Personal observation#5: *The picture is taken conveniently from the other side of the railway line which is actually Kingsbury street, inside a private community and not Lafayette street. This is further away from the proposed SVP lines. This is very misleading; see snapshots taken from Google maps below*

3

And this is what is included on the report:

The Mission Garden Townhome community has no walls as such and the main entry to residences face the road directly and are the most impacted. There are several other single family homes on Lafayette street with the same impact, having an entryway directly on the street. This and including other citations of reusing sections of older reports, is all in all absolutely unacceptable and instills distrust. This further shows incompetency of the agency/ agencies preparing this report.

Conclusion: *This project's initial study needs to expand beyond CEQA for approval from the public. The limited scope of CEQA has failed to address the following concerns we have:*

- *Health hazards due to EMF levels.- This is by far the gravest concern and CEQA is clearly not qualified to study that.*
- *Reduced property values- several references provided below.*
- *Loss of Aesthetic appeal for potential real estate buyers/ new and current businesses.*
- *Increase in audible noise levels during and post construction, which is already high in the area with presence of railway line and air traffic route.*
- *Increased fire hazard/ risk of other accidents.*
- *Induced current on railway lines with close proximity/ corona effect- CEQA report did not clearly address this for a 115KV line.*
- *Economic effect on the community from small to larger scale based on all of the above.*

We demand further investigation and revisit other routes or proposals to resolve the power needs of the city. We have to ensure our and our kids' health is not at stake in the name of development and

4

*infrastructure and are not in agreement for this project to move forward**. We cannot approve this to move forward as of now given the lack of study and absence of a satisfactory solution/ mitigation provided in favor/ assurance to public health.***

Additional References:
Research on effects of EMF on humans:

1. ***https://www.ncbi.nlm.nih.gov/pmc/articles/PMC6025786/***

This research reinforces the concerns of EMF exposure effect on human health.

2. ***https://www.epa.gov/radtown/electric-and-magnetic-fields-power-lines***

This resource suggests taking precautions and keeping distance or limiting exposure. Residents would no longer have either of these two options per the current proposals if they are living there 24-7.

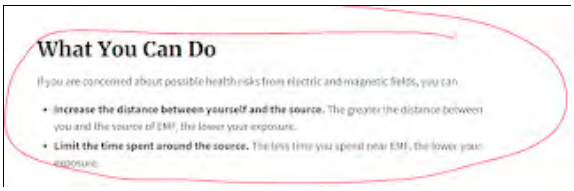
What You Can Do

If you are concerned about possible health risks from electric and magnetic fields, you can

- **Increase the distance between yourself and the source.** The greater the distance between you and the source of EMF, the lower your exposure.
- **Limit the time spent around the source.** The less time you spend near EMF, the lower your exposure.

3. ***https://www.fastexpert.com/blog/should-i-buy-a-house-near-power-lines/***

These are points of view from a real estate expert who clearly states that property value declines proportionately to the distance of the property from high tension lines. People have apprehensions whether or not research clearly defines the risk. Potential buyers might have low priority for a property too close to a high tension power line.

4. ***https://orchard.com/blog/posts/power-lines-and-property-value***

Another research on real estate values lowered due to high tension power lines proximity.

5

Email: NRS-KRS 115 kV T-Line

From: Prithvi Arun <prithvi.arun@gmail.com>
Sent: Friday, August 30, 2024 10:01 PM
To: NRS-KRS Project; mayorandcouncil@santaclaraca.gov; info@siliconvalleypower.com; planningcommission@santaclaraca.gov; manager@santaclaraca.gov; AJackman@santaclaraca.gov
Subject: Concerns Regarding Upcoming High Power Electric Wire Poles in Our Community for the upcoming SVP project connecting the Northern Receiving Station NRS to Kifer receiving station (KRS)- NRS-KRS 115kV Transmission Line Project

To Whomsoever it may concern,
We are residents of Santa Clara that will be negatively impacted by the "NRS-KRS 115kV Transmission Line Project". We have collectively reviewed the draft Initial Study/ Mitigated Negative declaration for "NRS-KRS 115kV Transmission Line Project" from July 2024. After reviewing this report and also attending the virtual and in person meetings, here are some references to emphasize our various concerns.
Reference #1 : CEQA's reporting includes these State reviewing agencies: California Air Resources Board (ARB), California Department of Fish and Wildlife, Bay Delta Region 3 (CDFW), California Department of Forestry and Fire Protection (CAL FIRE), California Department of Parks and Recreation, California Department of Toxic Substances Control (DTSC), California Department of Transportation, District 4 (DOT), California Department of Transportation, Division of Aeronautics (DOT), California Department of Transportation, Division of Transportation Planning (DOT), California Department of Water Resources (DWR), California Energy Commission, California Highway Patrol (CHP), California Native American Heritage Commission (NAHC), California Natural Resources Agency, California Public Utilities Commission (CPUC), California Regional Water Quality Control Board, San Francisco Bay Region 2 (RWQCB), Office of Historic Preservation, State Water Resources Control Board, Division of Drinking Water.
Personal observation#1 : *None of these agencies has any association with human health. CEQA reporting is not qualified enough to force the public to compromise on health concerns. Other agencies need to be involved to review this proposal, that are qualified to study the effect on " humans", not just wildlife and vegetation, or " environment. The checklist is completely devoid of our gravest humanitarian concerns. It is quite shocking that the project has not included any study to understand the potential impact of EMF waves on human lives, given that the transmission lines are potentially less than 60 feet from the closest dwellings. The city of Santa Clara needs to step in and have third party/ independent studies completed in favor of human health.*
Reference #2: Page 41 of report- Section 4.15. Electric and Magnetic Fields summary.
Personal observation#2 : *This consideration was completely absent earlier. Only after the residents raised their voices, this section was added. To our greatest disappointment, this section is copied over from an older report on the "South Loop Reconfiguration Project" from 2020. One would have expected that a new study would have been conducted for a project this size. The lack of due diligence and ignorance towards the specifics of this project are apparent and not acceptable. In fact we have found several sections of this older report as being reused across the entire report.*
The EMP map shared during the in person meeting had several flaws and we would like to question the viability of the study that was completed. What time of the day was the study completed and on what models were the values based on since these were done on assumption for the EMF values that would be there once the project is complete. Since we have seen the several sections of the report redundantly copied over from other reports, we would like a more detailed analysis of this report.
Regarding EMF concerns for human health, there are plenty of scientific studies that do indicate the grave concern on human health with EMF exposures and we cannot ignore this aspect. Here is a reference to an article and there are plenty of articles listed here under references:
https://psc.wi.gov/Documents/Brochures/EMF.pdf

There are not enough references listed in the draft report provided to us, and the explanation provided seems to be conveniently using studies that prove otherwise. This needs more investigation and references. The solution provided as raising the height of the poles and increasing the distance is non-existent. It was confirmed during the in person meeting that the design will not be altered and the height was already designed as required according to the SVP team present there. It seems that the preparers of this report did not even read the report after copying pasting from the old report as evident in the list of proposed solutions is not applicable here.

The live presentation on August 22nd showed the comparison of EMF values of household objects as a means to show that everyday household items carry a similar range of mG(milli Gauss) units. This comparison was inherently flawed since it mentioned that the household devices were producing those level at 1 feet while those indicated for 115KVf lines were at 60 feet. further these household devices do not operate 24X7 similar to the transmission lines.

There were a lot of citations of reports showcasing that no clear proof of EMF to human health exists but we would like to also point out certain states like Connecticut Department of Public Health have cited reports that have shown an increased incidence of childhood leukemia(Blood cancer) at avg exposure of only 3 mG. Also they have called out that some utility workers exposed to high levels of emf have increase risks of Lur Gehrig's disease.

They also call out that most impacts of EMF from high voltage lines dissipate at ~300 feet.

These are available on Page 2 & Page 3 of this report: https://portal.ct.gov/-/media/departments-and-agencies/dph/dph/environmental_health/eoha/pdf/emffactsheet2008pdf.pdf

This report has citations from WHO , National Institute of Environmental Health Sciences and California Department of Health Services.

https://www.niehs.nih.gov/sites/default/files/health/materials/electric_and_magnetic_fields_associated_with_the_use_of_electric_power_questions_and_answers_english_508.pdf

Some other questions around the EMF study map shared during presentation on Aug 22 2024:

1. Have you conducted an existing EMF study to identify the current value of the community ?
2. Are your emf study values based on the cumulative, or interference of existing emf and potential emf.
3. Emf value was calculated based on existing studies. What was the delta between mathematical modeling and actual values (from existing structures).
4. What is the delta between underground and overhead structures' emf values?
5. Can you provide the same for Route options B and C?
6. What happens when electrification of rail lines happens- as this is already planned for the future? Have you potentially considered the cumulative EMF effect in coexistence of the high power lines and with railway lines' electrification? Will the EMF values not be much higher then?
7. Can you share the mathematical modeling maps of Emf for 115k, 230k and the next two higher values of the power line ?
8. Can you share Emf maps from existing structures of 115k, 230 k and the next 2 higher values of the power line?
9. Please share any emf related information that you have especially if it contains assumptions for any calculations so we can understand the effects of current project and future projects.
10. Why does the electric pole structure proposed have wider diameter at the top? Can you share the design of the top of the pole ? Can it be extended by adding another section by bolting, welding or any other method? If so, what extra voltage can be added to the line?
11. what is the proposed power consumption of 95054 zip code for the next 5, 10 and 15 years in the master plan ?

Reference #3

Page 174- Section 5.21- Corona and induced current effect:

Personal observation#3

The railway line's proximity to the proposed high transmission lines is very concerning. The centerline distance from proposed lines to railway line is aproximately 50 feet per google maps with some margin for error. As per the report there are no Corona rings proposed for the 115KV lines. There seems to be negligence in design in consideration of the hazards posed by these high voltage lines as Corona effect

can transfer current to railway lines. All the residents are at a high risk of accidental hazards given the proximity of the railway line, this project is adding on to the hazards. This section is only stating information about what Corona effect is, as may be required by law, which by the way is again a copy paste from an old report. The only concern discussed in more depth is the audible noise level. The concerns are presented to imply that this is not significant by stating that 115KV lines pose less than significant risk**.**

Reference #4: Post meeting material from March 19th 2024 @https://santaclara.legistar.com/LegislationDetail.aspx?ID=6582415&GUID=E6E14646-3CF7-4D15-BB98-F18580696012&Options=&Search=

Personal observation#4: At surface level, it looks like Option #A was selected only based on Cost perspective, without any consideration to human health, young children, property values, Corona effect, long term sustainability perspective or any other factors. While its important to understand the results of CEQA study, its extremely critical to understand the negative impact of EMF on the many young children living around the proposed transmission lines. Without extensive research and study on the impact to young children and adult heath, we should not be approving such an incomplete proposal.

Page 6 of this document stated that the preferred route A cost of construction is $9.5 million. In discussions with several real estate agents in the region, I have unanimously found all to agree that the real estate values of residences in close proximity to power lines goes down. Its hard to find potential buyers and most folks refrain from buying a house too close to high power transmission lines. There are 1000 plus residences in the area affected by this project. Even if we were to make very rough assumptions, and assume minimal cost reduction in property values and take an average loss of $100,000 per property in the current year, that goes to $100,000,000 of loss of equity to the public. This is not even accounting the businesses affected by this project. This long explanation was to raise a point that if the selection of route A was saving money to the city, this is costing a huge financial loss to the public, which is not acceptable. This decrease in property values will also directly impact the tax collection by the Santa Clara Assessor and result in lower tax revenue coming into the city of Santa Clara.

Reference #5 : Page 49 of report- Figure 5.1-2. Wall separating residences and Lafayette Street.

Personal observation#5: *The picture is taken conveniently from the other side of the railway line which is actually Kingsbury street, inside a private community and not Lafayette street. This is further away from the proposed SVP lines. This is very misleading; see snapshots taken from Google maps below*

And this is what is included on the report:

NRS-KRS 115kV Transmission Line Project 5.1. Aesthetics

Figure 5.1-2. Wall Separating Residences and Lafayette Street

Figure 5.1-2

Wall Separating Residences and Lafayette Street

July 2024 5.1-5 Administrative Draft MND/IS

The Mission Garden Townhome community has no walls as such and the main entry to residences face the road directly and are the most impacted. There are several other single family homes on Lafayette street with the same impact, having an entryway directly on the street. This and including other citations

of reusing sections of older reports, is all in all absolutely unacceptable and instills distrust. This further shows incompetency of the agency/ agencies preparing this report.

Conclusion: *This project's initial study needs to expand beyond CEQA for approval from the public. The limited scope of CEQA has failed to address the following concerns we have:*

- *Health hazards due to EMF levels.- This is by far the gravest concern and CEQA is clearly not qualified to study that.*
- *Reduced property values- several references provided below.*
- *Loss of Aesthetic appeal for potential real estate buyers/ new and current businesses.*
- *Increase in audible noise levels during and post construction, which is already high in the area with presence of railway line and air traffic route.*
- *Increased fire hazard/ risk of other accidents.*
- *Induced current on railway lines with close proximity/ corona effect- CEQA report did not clearly address this for a 115KV line.*
- *Economic effect on the community from small to larger scale based on all of the above.*

We demand further investigation and revisit other routes or proposals to resolve the power needs of the city. We have to ensure our and our kids' health is not at stake in the name of development and infrastructure and are not in agreement for this project to move forward. ***We cannot approve this to move forward as of now given the lack of study and absence of a satisfactory solution/ mitigation provided in favor/ assurance to public health.***

Additional References:

Research on effects of EMF on humans:

1. ***https://www.ncbi.nlm.nih.gov/pmc/articles/PMC6025786/***

This research reinforces the concerns of EMF exposure effect on human health.

2. ***https://www.epa.gov/radtown/electric-and-magnetic-fields-power-lines***

This resource suggests taking precautions and keeping distance or limiting exposure. Residents would no longer have either of these two options per the current proposals if they are living there 24-7.

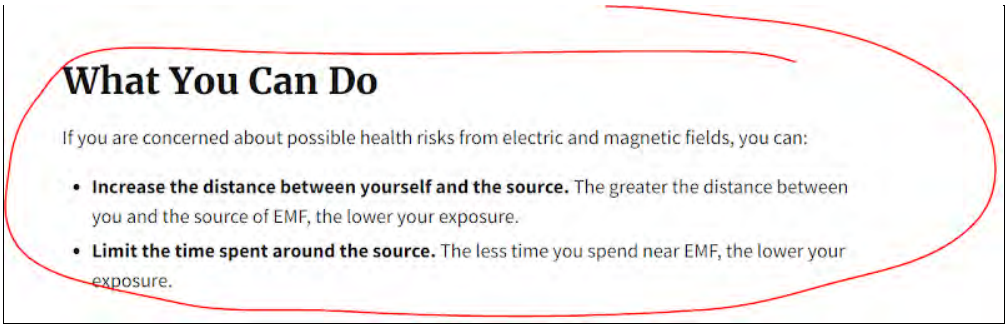

What You Can Do

If you are concerned about possible health risks from electric and magnetic fields, you can:

- **Increase the distance between yourself and the source.** The greater the distance between you and the source of EMF, the lower your exposure.
- **Limit the time spent around the source.** The less time you spend near EMF, the lower your exposure.

3. ***https://www.fastexpert.com/blog/should-i-buy-a-house-near-power-lines/***

These are points of view from a real estate expert who clearly states that property value declines proportionately to the distance of the property from high tension lines. People have apprehensions whether or not research clearly defines the risk. Potential buyers might have low priority for a property too close to a high tension power line.

4. ***https://orchard.com/blog/posts/power-lines-and-property-value***

Another research on real estate values lowered due to high tension power lines proximity.

--
Prithvi Arun

Email: NRS-KRS 115 kV T-Line

From: Vishnu H <vishnuhari@gmail.com>
Sent: Friday, August 30, 2024 9:41 PM
To: NRS-KRS Project; mayorandcouncil@santaclaraca.gov; info@siliconvalleypower.com; planningcommission@santaclaraca.gov; manager@santaclaraca.gov; AJackman@santaclaraca.gov
Subject: Concerns Regarding Upcoming High Power Electric Wire Poles in Our Community for the upcoming SVP project connecting the Northern Receiving Station NRS to Kifer receiving station (KRS)- NRS-KRS 115kV Transmission Line Project

To Whomsoever it may concern,
We are residents of Santa Clara that will be negatively impacted by the "NRS-KRS 115kV Transmission Line Project". We have collectively reviewed the draft Initial Study/ Mitigated Negative declaration for "NRS-KRS 115kV Transmission Line Project" from July 2024. After reviewing this report and also attending the virtual and in person meetings, here are some references to emphasize our various concerns.
Reference #1 : CEQA's reporting includes these State reviewing agencies: California Air Resources Board (ARB), California Department of Fish and Wildlife, Bay Delta Region 3 (CDFW), California Department of Forestry and Fire Protection (CAL FIRE), California Department of Parks and Recreation, California Department of Toxic Substances Control (DTSC), California Department of Transportation, District 4 (DOT), California Department of Transportation, Division of Aeronautics (DOT), California Department of Transportation, Division of Transportation Planning (DOT), California Department of Water Resources (DWR), California Energy Commission, California Highway Patrol (CHP), California Native American Heritage Commission (NAHC), California Natural Resources Agency, California Public Utilities Commission (CPUC), California Regional Water Quality Control Board, San Francisco Bay Region 2 (RWQCB), Office of Historic Preservation, State Water Resources Control Board, Division of Drinking Water.
Personal observation#1 : *None of these agencies has any association with human health. CEQA reporting is not qualified enough to force the public to compromise on health concerns. Other agencies need to be involved to review this proposal, that are qualified to study the effect on " humans", not just wildlife and vegetation, or " environment. The checklist is completely devoid of our gravest humanitarian concerns. It is quite shocking that the project has not included any study to understand the potential impact of EMF waves on human lives, given that the transmission lines are potentially less than 60 feet from the closest dwellings. The city of Santa Clara needs to step in and have third party/ independent studies completed in favor of human health.*
Reference #2: Page 41 of report- Section 4.15. Electric and Magnetic Fields summary.
Personal observation#2 : *This consideration was completely absent earlier. Only after the residents raised their voices, this section was added. To our greatest disappointment, this section is copied over from an older report on the "South Loop Reconfiguration Project" from 2020. One would have expected that a new study would have been conducted for a project this size. The lack of due diligence and ignorance towards the specifics of this project are apparent and not acceptable. In fact we have found several sections of this older report as being reused across the entire report.*
The EMP map shared during the in person meeting had several flaws and we would like to question the viability of the study that was completed. What time of the day was the study completed and on what models were the values based on since these were done on assumption for the EMF values that would be there once the project is complete. Since we have seen the several sections of the report redundantly copied over from other reports, we would like a more detailed analysis of this report.
Regarding EMF concerns for human health, there are plenty of scientific studies that do indicate the grave concern on human health with EMF exposures and we cannot ignore this aspect. Here is a reference to an article and there are plenty of articles listed here under references:

https://psc.wi.gov/Documents/Brochures/EMF.pdf

There are not enough references listed in the draft report provided to us, and the explanation provided seems to be conveniently using studies that prove otherwise. This needs more investigation and references. The solution provided as raising the height of the poles and increasing the distance is non-existent. It was confirmed during the in person meeting that the design will not be altered and the height was already designed as required according to the SVP team present there. It seems that the preparers of this report did not even read the report after copying pasting from the old report as evident in the list of proposed solutions is not applicable here.

The live presentation on August 22nd showed the comparison of EMF values of household objects as a means to show that everyday household items carry a similar range of mG(milli Gauss) units. This comparison was inherently flawed since it mentioned that the household devices were producing those level at 1 feet while those indicated for 115KVf lines were at 60 feet. further these household devices do not operate 24X7 similar to the transmission lines.

There were a lot of citations of reports showcasing that no clear proof of EMF to human health exists but we would like to also point out certain states like Connecticut Department of Public Health have cited reports that have shown an increased incidence of childhood leukemia(Blood cancer) at avg exposure of only 3 mG. Also they have called out that some utility workers exposed to high levels of emf have increase risks of Lur Gehrig's disease.

They also call out that most impacts of EMF from high voltage lines dissipate at ~300 feet.

These are available on Page 2 & Page 3 of this report: https://portal.ct.gov/-/media/departments-and-agencies/dph/dph/environmental_health/eoha/pdf/emffactsheet2008pdf.pdf

This report has citations from WHO , National Institute of Environmental Health Sciences and California Department of Health Services.

https://www.niehs.nih.gov/sites/default/files/health/materials/electric_and_magnetic_fields_associated_with_the_use_of_electric_power_questions_and_answers_english_508.pdf

Some other questions around the EMF study map shared during presentation on Aug 22 2024:

1. Have you conducted an existing EMF study to identify the current value of the community ?
2. Are your emf study values based on the cumulative, or interference of existing emf and potential emf.
3. Emf value was calculated based on existing studies. What was the delta between mathematical modeling and actual values (from existing structures).
4. What is the delta between underground and overhead structures' emf values?
5. Can you provide the same for Route options B and C?
6. What happens when electrification of rail lines happens- as this is already planned for the future? Have you potentially considered the cumulative EMF effect in coexistence of the high power lines and with railway lines' electrification? Will the EMF values not be much higher then?
7. Can you share the mathematical modeling maps of Emf for 115k, 230k and the next two higher values of the power line ?
8. Can you share Emf maps from existing structures of 115k, 230 k and the next 2 higher values of the power line?
9. Please share any emf related information that you have especially if it contains assumptions for any calculations so we can understand the effects of current project and future projects.
10. Why does the electric pole structure proposed have wider diameter at the top? Can you share the design of the top of the pole ? Can it be extended by adding another section by bolting, welding or any other method? If so, what extra voltage can be added to the line?
11. what is the proposed power consumption of 95054 zip code for the next 5, 10 and 15 years in the master plan ?

Reference #3

Page 174- Section 5.21- Corona and induced current effect:

Personal observation#3

The railway line's proximity to the proposed high transmission lines is very concerning. The centerline distance from proposed lines to railway line is aproximately 50 feet per google maps with some margin for error. As per the report there are no Corona rings proposed for the 115KV lines. There seems to be

negligence in design in consideration of the hazards posed by these high voltage lines as Corona effect can transfer current to railway lines. All the residents are at a high risk of accidental hazards given the proximity of the railway line, this project is adding on to the hazards. This section is only stating information about what Corona effect is, as may be required by law, which by the way is again a copy paste from an old report. The only concern discussed in more depth is the audible noise level. The concerns are presented to imply that this is not significant by stating that 115KV lines pose less than significant risk**.**

Reference #4: Post meeting material from March 19th 2024 @https://santaclara.legistar.com/LegislationDetail.aspx?ID=6582415&GUID=E6E14646-3CF7-4D15-BB98-F18580696012&Options=&Search=

Personal observation#4: At surface level, it looks like Option #A was selected only based on Cost perspective, without any consideration to human health, young children, property values, Corona effect, long term sustainability perspective or any other factors. While its important to understand the results of CEQA study, its extremely critical to understand the negative impact of EMF on the many young children living around the proposed transmission lines. Without extensive research and study on the impact to young children and adult heath, we should not be approving such an incomplete proposal.

Page 6 of this document stated that the preferred route A cost of construction is $9.5 million. In discussions with several real estate agents in the region, I have unanimously found all to agree that the real estate values of residences in close proximity to power lines goes down. Its hard to find potential buyers and most folks refrain from buying a house too close to high power transmission lines. There are 1000 plus residences in the area affected by this project. Even if we were to make very rough assumptions, and assume minimal cost reduction in property values and take an average loss of $100,000 per property in the current year, that goes to $100,000,000 of loss of equity to the public. This is not even accounting the businesses affected by this project. This long explanation was to raise a point that if the selection of route A was saving money to the city, this is costing a huge financial loss to the public, which is not acceptable. This decrease in property values will also directly impact the tax collection by the Santa Clara Assessor and result in lower tax revenue coming into the city of Santa Clara.

Reference #5 : Page 49 of report- Figure 5.1-2. Wall separating residences and Lafayette Street.

Personal observation#5: *The picture is taken conveniently from the other side of the railway line which is actually Kingsbury street, inside a private community and not Lafayette street. This is further away from the proposed SVP lines. This is very misleading; see snapshots taken from Google maps below*

<A street with cars parked on it Description automatically generated.png>

-

<An aerial view of a neighborhood Description automatically generated.png>

And this is what is included on the report:

<A red car parked on a street Description automatically generated.png>

The Mission Garden Townhome community has no walls as such and the main entry to residences face the road directly and are the most impacted. There are several other single family homes on Lafayette street with the same impact, having an entryway directly on the street. This and including other citations of reusing sections of older reports, is all in all absolutely unacceptable and instills distrust. This further shows incompetency of the agency/ agencies preparing this report.

Conclusion: *This project's initial study needs to expand beyond CEQA for approval from the public. The limited scope of CEQA has failed to address the following concerns we have:*

- *Health hazards due to EMF levels.- This is by far the gravest concern and CEQA is clearly not qualified to study that.*
- *Reduced property values- several references provided below.*
- *Loss of Aesthetic appeal for potential real estate buyers/ new and current businesses.*
- *Increase in audible noise levels during and post construction, which is already high in the area with presence of railway line and air traffic route.*
- *Increased fire hazard/ risk of other accidents.*
- *Induced current on railway lines with close proximity/ corona effect- CEQA report did not clearly address this for a 115KV line.*

- *Economic effect on the community from small to larger scale based on all of the above.*

*We demand further investigation and revisit other routes or proposals to resolve the power needs of the city. We have to ensure our and our kids' health is not at stake in the name of development and infrastructure and are not in agreement for this project to move forward**. We cannot approve this to move forward as of now given the lack of study and absence of a satisfactory solution/ mitigation provided in favor/ assurance to public health.***

Additional References:

Research on effects of EMF on humans:

1. ***https://www.ncbi.nlm.nih.gov/pmc/articles/PMC6025786/***

This research reinforces the concerns of EMF exposure effect on human health.

2. ***https://www.epa.gov/radtown/electric-and-magnetic-fields-power-lines***

This resource suggests taking precautions and keeping distance or limiting exposure. Residents would no longer have either of these two options per the current proposals if they are living there 24-7.

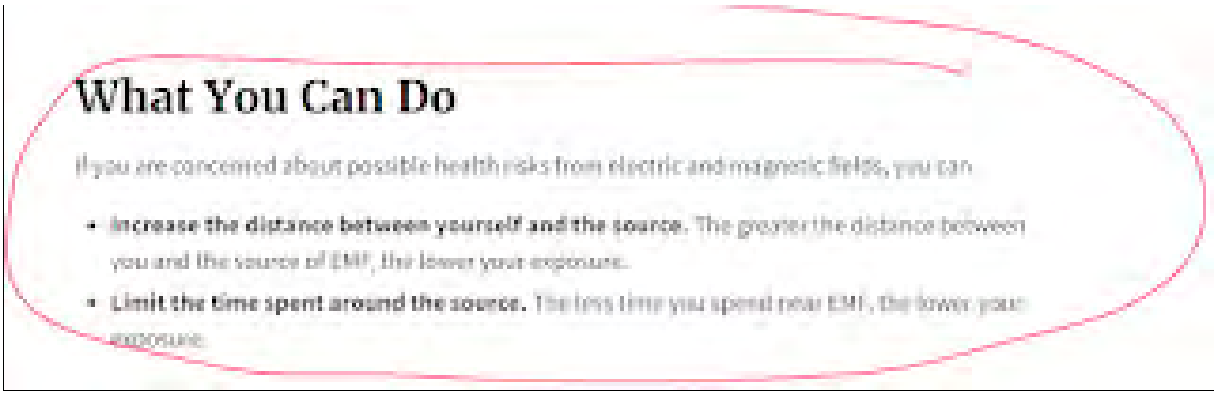

3. ***https://www.fastexpert.com/blog/should-i-buy-a-house-near-power-lines/***

These are points of view from a real estate expert who clearly states that property value declines proportionately to the distance of the property from high tension lines. People have apprehensions whether or not research clearly defines the risk. Potential buyers might have low priority for a property too close to a high tension power line.

4. ***https://orchard.com/blog/posts/power-lines-and-property-value***

Another research on real estate values lowered due to high tension power lines proximity.

Kind Regards, Vishnu

Email: NRS-KRS 115 kV T-Line

From: Sathiya Narayanan <sathiyakri@hotmail.com>
Sent: Friday, August 30, 2024 9:39 PM
To: NRS-KRS Project; mayorandcouncil@santaclaraca.gov; info@siliconvalleypower.com; PlanningCommission; manager@santaclaraca.gov; Allie Jackman
Subject: Concerns Regarding Upcoming High Power Electric Wire Poles in Our Community for the upcoming SVP project connecting the Northern Receiving Station NRS to Kifer receiving station (KRS)- NRS-KRS 115kV Transmission Line Project

Concerns Regarding Upcoming High Power Electric Wire Poles in Our Community for the upcoming SVP project connecting the Northern Receiving Station NRS to Kifer receiving station (KRS)- *NRS-KRS 115kV Transmission Line Project*

To Whomsoever it may concern,
We are residents of Santa Clara that will be negatively impacted by the "NRS-KRS 115kV Transmission Line Project". We have collectively reviewed the draft Initial Study/ Mitigated Negative declaration for "NRS-KRS 115kV Transmission Line Project" from July 2024. After reviewing this report and also attending the virtual and in person meetings, here are some references to emphasize our various concerns.
Reference #1 : CEQA's reporting includes these State reviewing agencies: California Air Resources Board (ARB), California Department of Fish and Wildlife, Bay Delta Region 3 (CDFW), California Department of Forestry and Fire Protection (CAL FIRE), California Department of Parks and Recreation, California Department of Toxic Substances Control (DTSC), California Department of Transportation, District 4 (DOT), California Department of Transportation, Division of Aeronautics (DOT), California Department of Transportation, Division of Transportation Planning (DOT), California Department of Water Resources (DWR), California Energy Commission, California Highway Patrol (CHP), California Native American Heritage Commission (NAHC), California Natural Resources Agency, California Public Utilities Commission (CPUC), California Regional Water Quality Control Board, San Francisco Bay Region 2 (RWQCB), Office of Historic Preservation, State Water Resources Control Board, Division of Drinking Water.
Personal observation#1 : *None of these agencies has any association with human health. CEQA reporting is not qualified enough to force the public to compromise on health concerns. Other agencies need to be involved to review this proposal, that are qualified to study the effect on " humans", not just wildlife and vegetation, or " environment. The checklist is completely devoid of our gravest humanitarian concerns. It is quite shocking that the project has not included any study to understand the potential impact of EMF waves on human lives, given that the transmission lines are potentially less than 60 feet from the closest dwellings. The city of Santa Clara needs to step in and have third party/ independent studies completed in favor of human health.*

Reference #2: Page 41 of report- Section 4.15. Electric and Magnetic Fields summary.
Personal observation#2 : *This consideration was completely absent earlier. Only after the residents raised their voices, this section was added. To our greatest disappointment, this section is copied over from an older report on the "South Loop Reconfiguration Project" from 2020. One would have expected that a new study would have been conducted for a project this size. The lack of due diligence and ignorance towards the specifics of this project are apparent and not acceptable. In fact we have found several sections of this older report as being reused across the entire report.*
The EMP map shared during the in person meeting had several flaws and we would like to question the viability of the study that was completed. What time of the day was the study completed and on what models were the values based on since these were done on assumption for the EMF values that would be there once the project is complete. Since we have seen the several sections of the report redundantly copied over from other reports, we would like a more detailed analysis of this report.

Regarding EMF concerns for human health, there are plenty of scientific studies that do indicate the grave concern on human health with EMF exposures and we cannot ignore this aspect. Here is a reference to an article and there are plenty of articles listed here under references: *https://psc.wi.gov/Documents/Brochures/EMF.pdf*

There are not enough references listed in the draft report provided to us, and the explanation provided seems to be conveniently using studies that prove otherwise. This needs more investigation and references. The solution provided as raising the height of the poles and increasing the distance is non-existent. It was confirmed during the in person meeting that the design will not be altered and the height was already designed as required according to the SVP team present there. It seems that the preparers of this report did not even read the report after copying pasting from the old report as evident in the list of proposed solutions is not applicable here.

The live presentation on August 22nd showed the comparison of EMF values of household objects as a means to show that everyday household items carry a similar range of mG(milli Gauss) units. This comparison was inherently flawed since it mentioned that the household devices were producing those level at 1 feet while those indicated for 115KVf lines were at 60 feet. further these household devices do not operate 24X7 similar to the transmission lines.

There were a lot of citations of reports showcasing that no clear proof of EMF to human health exists but we would like to also point out certain states like Connecticut Department of Public Health have cited reports that have shown an increased incidence of childhood leukemia(Blood cancer) at avg exposure of only 3 mG. Also they have called out that some utility workers exposed to high levels of emf have increase risks of Lur Gehrig's disease.

They also call out that most impacts of EMF from high voltage lines dissipate at ~300 feet.

These are available on Page 2 & Page 3 of this report: https://portal.ct.gov/-/media/departments-and-agencies/dph/dph/environmental_health/eoha/pdf/emffactsheet2008pdf.pdf

This report has citations from WHO , National Institute of Environmental Health Sciences and California Department of Health Services.

https://www.niehs.nih.gov/sites/default/files/health/materials/electric_and_magnetic_fields_associated_with_the_use_of_electric_power_questions_and_answers_english_508.pdf

Some other questions around the EMF study map shared during presentation on Aug 22 2024:

1. Have you conducted an existing EMF study to identify the current value of the community ?
2. Are your emf study values based on the cumulative, or interference of existing emf and potential emf.
3. Emf value was calculated based on existing studies. What was the delta between mathematical modeling and actual values (from existing structures).
4. What is the delta between underground and overhead structures' emf values?
5. Can you provide the same for Route options B and C?
6. What happens when electrification of rail lines happens- as this is already planned for the future? Have you potentially considered the cumulative EMF effect in coexistence of the high power lines and with railway lines' electrification? Will the EMF values not be much higher then?
7. Can you share the mathematical modeling maps of Emf for 115k, 230k and the next two higher values of the power line ?
8. Can you share Emf maps from existing structures of 115k, 230 k and the next 2 higher values of the power line?
9. Please share any emf related information that you have especially if it contains assumptions for any calculations so we can understand the effects of current project and future projects.
10. Why does the electric pole structure proposed have wider diameter at the top? Can you share the design of the top of the pole ? Can it be extended by adding another section by bolting, welding or any other method? If so, what extra voltage can be added to the line?
11. what is the proposed power consumption of 95054 zip code for the next 5, 10 and 15 years in the master plan ?

Reference #3

Page 174- Section 5.21- Corona and induced current effect:

Personal observation#3
The railway line's proximity to the proposed high transmission lines is very concerning. The centerline distance from proposed lines to railway line is aproximately 50 feet per google maps with some margin for error. As per the report there are no Corona rings proposed for the 115KV lines. There seems to be negligence in design in consideration of the hazards posed by these high voltage lines as Corona effect can transfer current to railway lines. All the residents are at a high risk of accidental hazards given the proximity of the railway line, this project is adding on to the hazards. This section is only stating information about what Corona effect is, as may be required by law, which by the way is again a copy paste from an old report. The only concern discussed in more depth is the audible noise level. The concerns are presented to imply that this is not significant by stating that 115KV lines pose less than significant risk**.**

Reference #4: Post meeting material from March 19th 2024
@https://santaclara.legistar.com/LegislationDetail.aspx?ID=6582415&GUID=E6E14646-3CF7-4D15-BB98-F18580696012&Options=&Search=
Personal observation#4: At surface level, it looks like Option #A was selected only based on Cost perspective, without any consideration to human health, young children, property values, Corona effect, long term sustainability perspective or any other factors. While its important to understand the results of CEQA study, its extremely critical to understand the negative impact of EMF on the many young children living around the proposed transmission lines. Without extensive research and study on the impact to young children and adult heath, we should not be approving such an incomplete proposal.
Page 6 of this document stated that the preferred route A cost of construction is $9.5 million. In discussions with several real estate agents in the region, I have unanimously found all to agree that the real estate values of residences in close proximity to power lines goes down. Its hard to find potential buyers and most folks refrain from buying a house too close to high power transmission lines. There are 1000 plus residences in the area affected by this project. Even if we were to make very rough assumptions, and assume minimal cost reduction in property values and take an average loss of $100,000 per property in the current year, that goes to $100,000,000 of loss of equity to the public. This is not even accounting the businesses affected by this project. This long explanation was to raise a point that if the selection of route A was saving money to the city, this is costing a huge financial loss to the public, which is not acceptable. This decrease in property values will also directly impact the tax collection by the Santa Clara Assessor and result in lower tax revenue coming into the city of Santa Clara.

Reference #5 : Page 49 of report- Figure 5.1-2. Wall separating residences and Lafayette Street.
Personal observation#5: *The picture is taken conveniently from the other side of the railway line which is actually Kingsbury street, inside a private community and not Lafayette street. This is further away from the proposed SVP lines. This is very misleading; see snapshots taken from Google maps below*

And this is what is included on the report:

Figure 5.1-2. Wall Separating Residences and Lafayette Street

Figure 5.1-2
Wall Separating Residences and Lafayette Street

The Mission Garden Townhome community has no walls as such and the main entry to residences face the road directly and are the most impacted. There are several other single family homes on Lafayette street with the same impact, having an entryway directly on the street. This and including other citations of reusing sections of older reports, is all in all absolutely unacceptable and instills distrust. This further shows incompetency of the agency/ agencies preparing this report.

Conclusion: *This project's initial study needs to expand beyond CEQA for approval from the public. The limited scope of CEQA has failed to address the following concerns we have:*

- Health hazards due to EMF levels.- This is by far the gravest concern and CEQA is clearly not qualified to study that.
- Reduced property values- several references provided below.
- Loss of Aesthetic appeal for potential real estate buyers/ new and current businesses.
- Increase in audible noise levels during and post construction, which is already high in the area with presence of railway line and air traffic route.
- Increased fire hazard/ risk of other accidents.
- Induced current on railway lines with close proximity/ corona effect- CEQA report did not clearly address this for a 115KV line.
- Economic effect on the community from small to larger scale based on all of the above.

*We demand further investigation and revisit other routes or proposals to resolve the power needs of the city. We have to ensure our and our kids' health is not at stake in the name of development and infrastructure and are not in agreement for this project to move forward**. We cannot approve this to move forward as of now given the lack of study and absence of a satisfactory solution/ mitigation provided in favor/ assurance to public health.***

Additional References:
Research on effects of EMF on humans:

1. https://www.ncbi.nlm.nih.gov/pmc/articles/PMC6025786/

This research reinforces the concerns of EMF exposure effect on human health.

2. https://www.epa.gov/radtown/electric-and-magnetic-fields-power-lines

This resource suggests taking precautions and keeping distance or limiting exposure. Residents would no longer have either of these two options per the current proposals if they are living there 24-7.

What You Can Do

If you are concerned about possible health risks from electric and magnetic fields, you can:

- **Increase the distance between yourself and the source.** The greater the distance between you and the source of EMF, the lower your exposure.
- **Limit the time spent around the source.** The less time you spend near EMF, the lower your exposure.

3. *https://www.fastexpert.com/blog/should-i-buy-a-house-near-power-lines/*

These are points of view from a real estate expert who clearly states that property value declines proportionately to the distance of the property from high tension lines. People have apprehensions whether or not research clearly defines the risk. Potential buyers might have low priority for a property too close to a high tension power line.

4. https://orchard.com/blog/posts/power-lines-and-property-value

Another research on real estate values lowered due to high tension power lines proximity.

Always in Bhagavan

Sathiya

--

சும்மா இரு. Be Still.

Email: NRS-KRS 115 kV T-Line

From: Unnikrishnan Udinoor <unnikrishnan.udinoor@gmail.com>
Sent: Friday, August 30, 2024 7:42 PM
To: NRS-KRS Project; mayorandcouncil@santaclaraca.gov; info@siliconvalleypower.com; planningcommission@santaclaraca.gov; manager@santaclaraca.gov; ajackman@santaclaraca.gov
Subject: Concerns Regarding Upcoming High Power Electric Wire Poles in Our Community for the upcoming SVP project connecting the Northern Receiving Station NRS to Kifer receiving station (KRS)- NRS-KRS 115kV Transmission Line Project

To Whomsoever it may concern,

We are residents of Santa Clara that will be negatively impacted by the "NRS-KRS 115kV Transmission Line Project". We have collectively reviewed the draft Initial Study/ Mitigated Negative declaration for "NRS-KRS 115kV Transmission Line Project" from July 2024. After reviewing this report and also attending the virtual and in person meetings, here are some references to emphasize our various concerns.

Reference #1 : CEQA's reporting includes these State reviewing agencies: California Air Resources Board (ARB), California Department of Fish and Wildlife, Bay Delta Region 3 (CDFW), California Department of Forestry and Fire Protection (CAL FIRE), California Department of Parks and Recreation, California Department of Toxic Substances Control (DTSC), California Department of Transportation, District 4 (DOT), California Department of Transportation, Division of Aeronautics (DOT), California Department of Transportation, Division of Transportation Planning (DOT), California Department of Water Resources (DWR), California Energy Commission, California Highway Patrol (CHP), California Native American Heritage Commission (NAHC), California Natural Resources Agency, California Public Utilities Commission (CPUC), California Regional Water Quality Control Board, San Francisco Bay Region 2 (RWQCB), Office of Historic Preservation, State Water Resources Control Board, Division of Drinking Water.

Personal observation#1 : *None of these agencies has any association with human health. CEQA reporting is not qualified enough to force the public to compromise on health concerns. Other agencies need to be involved to review this proposal, that are qualified to study the effect on " humans", not just wildlife and vegetation, or " environment. The checklist is completely devoid of our gravest humanitarian concerns. It is quite shocking that the project has not included any study to understand the potential impact of EMF waves on human lives, given that the transmission lines are potentially less than 60 feet from the closest dwellings. The city of Santa Clara needs to step in and have third party/ independent studies completed in favor of human health.*

Reference #2: Page 41 of report- Section 4.15. Electric and Magnetic Fields summary.

Personal observation#2 : *This consideration was completely absent earlier. Only after the residents raised their voices, this section was added. To our greatest disappointment, this section is copied over from an older report on the "South Loop Reconfiguration Project" from 2020. One would have expected that a new study would have been conducted for a project this size. The lack of due diligence and ignorance towards the specifics of this project are apparent and not acceptable. In fact we have found several sections of this older report as being reused across the entire report.*

The EMP map shared during the in person meeting had several flaws and we would like to question the viability of the study that was completed. What time of the day was the study completed and on what models were the values based on since these were done on assumption for the EMF values that would

be there once the project is complete. Since we have seen the several sections of the report redundantly copied over from other reports, we would like a more detailed analysis of this report.

Regarding EMF concerns for human health, there are plenty of scientific studies that do indicate the grave concern on human health with EMF exposures and we cannot ignore this aspect. Here is a reference to an article and there are plenty of articles listed here under references:

https://psc.wi.gov/Documents/Brochures/EMF.pdf

There are not enough references listed in the draft report provided to us, and the explanation provided seems to be conveniently using studies that prove otherwise. This needs more investigation and references. The solution provided as raising the height of the poles and increasing the distance is non-existent. It was confirmed during the in person meeting that the design will not be altered and the height was already designed as required according to the SVP team present there. It seems that the preparers of this report did not even read the report after copying pasting from the old report as evident in the list of proposed solutions is not applicable here.

The live presentation on August 22nd showed the comparison of EMF values of household objects as a means to show that everyday household items carry a similar range of mG(milli Gauss) units. This comparison was inherently flawed since it mentioned that the household devices were producing those level at 1 feet while those indicated for 115KVf lines were at 60 feet. further these household devices do not operate 24X7 similar to the transmission lines.

There were a lot of citations of reports showcasing that no clear proof of EMF to human health exists but we would like to also point out certain states like Connecticut Department of Public Health have cited reports that have shown an increased incidence of childhood leukemia(Blood cancer) at avg exposure of only 3 mG. Also they have called out that some utility workers exposed to high levels of emf have increase risks of Lur Gehrig's disease.

They also call out that most impacts of EMF from high voltage lines dissipate at ~300 feet.

These are available on Page 2 & Page 3 of this report: https://portal.ct.gov/-/media/departments-and-agencies/dph/dph/environmental_health/eoha/pdf/emffactsheet2008pdf.pdf

This report has citations from WHO , National Institute of Environmental Health Sciences and California Department of Health Services.

https://www.niehs.nih.gov/sites/default/files/health/materials/electric_and_magnetic_fields_associated_with_the_use_of_electric_power_questions_and_answers_english_508.pdf

Some other questions around the EMF study map shared during presentation on Aug 22 2024:

1. Have you conducted an existing EMF study to identify the current value of the community ?

2. Are your emf study values based on the cumulative, or interference of existing emf and potential emf.

3. Emf value was calculated based on existing studies. What was the delta between mathematical modeling and actual values (from existing structures).

4. What is the delta between underground and overhead structures' emf values?

5. Can you provide the same for Route options B and C?

6. What happens when electrification of rail lines happens- as this is already planned for the future? Have you potentially considered the cumulative EMF effect in coexistence of the high power lines and with railway lines' electrification? Will the EMF values not be much higher then?

7. Can you share the mathematical modeling maps of Emf for 115k, 230k and the next two higher values of the power line ?

8. Can you share Emf maps from existing structures of 115k, 230 k and the next 2 higher values of the power line?

9. Please share any emf related information that you have especially if it contains assumptions for any calculations so we can understand the effects of current project and future projects.

10. Why does the electric pole structure proposed have wider diameter at the top? Can you share the design of the top of the pole ? Can it be extended by adding another section by bolting, welding or any other method? If so, what extra voltage can be added to the line?

11. what is the proposed power consumption of 95054 zip code for the next 5, 10 and 15 years in the master plan ?

Reference #3

Page 174- Section 5.21- Corona and induced current effect:

Personal observation#3

The railway line's proximity to the proposed high transmission lines is very concerning. The centerline distance from proposed lines to railway line is aproximately 50 feet per google maps with some margin for error. As per the report there are no Corona rings proposed for the 115KV lines. There seems to be negligence in design in consideration of the hazards posed by these high voltage lines as Corona effect can transfer current to railway lines. All the residents are at a high risk of accidental hazards given the proximity of the railway line, this project is adding on to the hazards. This section is only stating information about what Corona effect is, as may be required by law, which by the way is again a copy paste from an old report. The only concern discussed in more depth is the audible noise level. The concerns are presented to imply that this is not significant by stating that 115KV lines pose less than significant risk**.**

Reference #4: Post meeting material from March 19th 2024 @https://santaclara.legistar.com/LegislationDetail.aspx?ID=6582415&GUID=E6E14646-3CF7-4D15-BB98-F18580696012&Options=&Search=

Personal observation#4: At surface level, it looks like Option #A was selected only based on Cost perspective, without any consideration to human health, young children, property values, Corona effect, long term sustainability perspective or any other factors. While its important to understand the results of CEQA study, its extremely critical to understand the negative impact of EMF on the many young children living around the proposed transmission lines. Without extensive research and study on the impact to young children and adult heath, we should not be approving such an incomplete proposal.

Page 6 of this document stated that the preferred route A cost of construction is $9.5 million. In discussions with several real estate agents in the region, I have unanimously found all to agree that the real estate values of residences in close proximity to power lines goes down. Its hard to find potential buyers and most folks refrain from buying a house too close to high power transmission lines. There are 1000 plus residences in the area affected by this project. Even if we were to make very rough assumptions, and assume minimal cost reduction in property values and take an average loss of $100,000 per property in the current year, that goes to $100,000,000 of loss of equity to the public. This is not even accounting the businesses affected by this project. This long explanation was to raise a point that if the selection of route A was saving money to the city, this is costing a huge financial loss to the

public, which is not acceptable. This decrease in property values will also directly impact the tax collection by the Santa Clara Assessor and result in lower tax revenue coming into the city of Santa Clara.

Reference #5 : Page 49 of report- Figure 5.1-2. Wall separating residences and Lafayette Street.

Personal observation#5: *The picture is taken conveniently from the other side of the railway line which is actually Kingsbury street, inside a private community and not Lafayette street. This is further away from the proposed SVP lines. This is very misleading; see snapshots taken from Google maps below*

And this is what is included on the report:

Figure 5.1-2. Wall Separating Residences and Lafayette Street

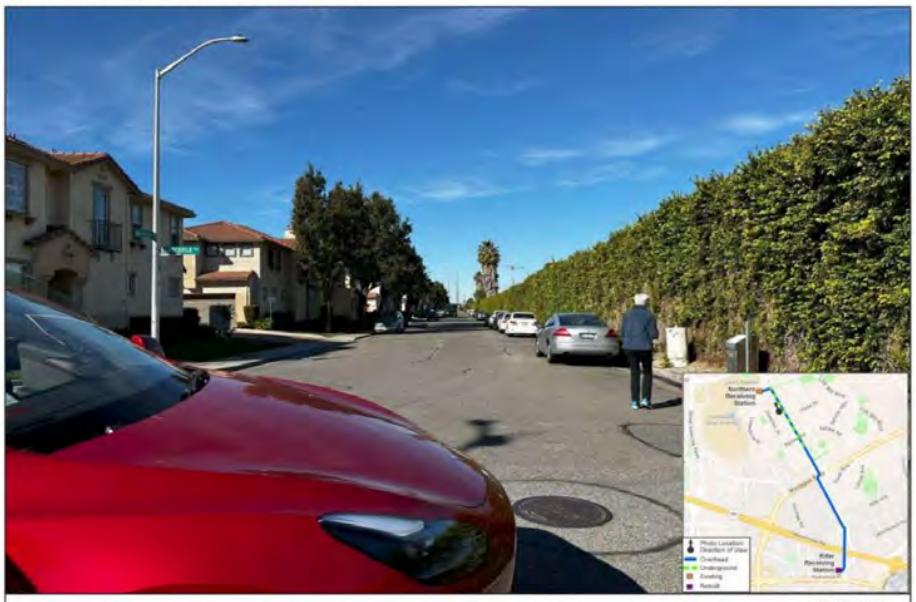

Figure 5.1-2
Wall Separating Residences and Lafayette Street

The Mission Garden Townhome community has no walls as such and the main entry to residences face the road directly and are the most impacted. There are several other single family homes on Lafayette street with the same impact, having an entryway directly on the street. This and including other citations of reusing sections of older reports, is all in all absolutely unacceptable and instills distrust. This further shows incompetency of the agency/ agencies preparing this report.

Conclusion: *This project's initial study needs to expand beyond CEQA for approval from the public. The limited scope of CEQA has failed to address the following concerns we have:*

- *Health hazards due to EMF levels.- This is by far the gravest concern and CEQA is clearly not qualified to study that.*
- *Reduced property values- several references provided below.*
- *Loss of Aesthetic appeal for potential real estate buyers/ new and current businesses.*
- *Increase in audible noise levels during and post construction, which is already high in the area with presence of railway line and air traffic route.*
- *Increased fire hazard/ risk of other accidents.*
- *Induced current on railway lines with close proximity/ corona effect- CEQA report did not clearly address this for a 115KV line.*
- *Economic effect on the community from small to larger scale based on all of the above.*

*We demand further investigation and revisit other routes or proposals to resolve the power needs of the city. We have to ensure our and our kids' health is not at stake in the name of development and infrastructure and are not in agreement for this project to move forward****. We cannot approve this to move forward as of now given the lack of study and absence of a satisfactory solution/ mitigation provided in favor/ assurance to public health.***

Additional References:

Research on effects of EMF on humans:

1. ***https://www.ncbi.nlm.nih.gov/pmc/articles/PMC6025786/***

This research reinforces the concerns of EMF exposure effect on human health.

2. ***https://www.epa.gov/radtown/electric-and-magnetic-fields-power-lines***

This resource suggests taking precautions and keeping distance or limiting exposure. Residents would no longer have either of these two options per the current proposals if they are living there 24-7.

What You Can Do

If you are concerned about possible health risks from electric and magnetic fields, you can:

- **Increase the distance between yourself and the source.** The greater the distance between you and the source of EMF, the lower your exposure.
- **Limit the time spent around the source.** The less time you spend near EMF, the lower your exposure.

3. ***https://www.fastexpert.com/blog/should-i-buy-a-house-near-power-lines/***

These are points of view from a real estate expert who clearly states that property value declines proportionately to the distance of the property from high tension lines. People have apprehensions whether or not research clearly defines the risk. Potential buyers might have low priority for a property too close to a high tension power line.

4. ***https://orchard.com/blog/posts/power-lines-and-property-value***

Another research on real estate values lowered due to high tension power lines proximity.

Unnikrishnan Udinoor
4479 Moulin Pl, Santa Clara - 95054
408 368 2674

Mission Gardens

--
Regards
Unni

Email: NRS-KRS 115 kV T-Line

From: Sweety h <sweetkhus21@gmail.com>
Sent: Friday, August 30, 2024 6:31 PM
To: NRS-KRS Project; mayorandcouncil@santaclaraca.gov; info@siliconvalleypower.com; planningcommission@santaclaraca.gov; manager@santaclaraca.gov; AJackman@santaclaraca.gov
Subject: Concerns Regarding Upcoming High Power Electric Wire Poles in Our Community for the upcoming SVP project connecting the Northern Receiving Station NRS to Kifer receiving station (KRS)- NRS-KRS 115kV Transmission Line Project

To Whomsoever it may concern,
We are residents of Santa Clara that will be negatively impacted by the "NRS-KRS 115kV Transmission Line Project". We have collectively reviewed the draft Initial Study/ Mitigated Negative declaration for "NRS-KRS 115kV Transmission Line Project" from July 2024. After reviewing this report and also attending the virtual and in person meetings, here are some references to emphasize our various concerns.
Reference #1 : CEQA's reporting includes these State reviewing agencies: California Air Resources Board (ARB), California Department of Fish and Wildlife, Bay Delta Region 3 (CDFW), California Department of Forestry and Fire Protection (CAL FIRE), California Department of Parks and Recreation, California Department of Toxic Substances Control (DTSC), California Department of Transportation, District 4 (DOT), California Department of Transportation, Division of Aeronautics (DOT), California Department of Transportation, Division of Transportation Planning (DOT), California Department of Water Resources (DWR), California Energy Commission, California Highway Patrol (CHP), California Native American Heritage Commission (NAHC), California Natural Resources Agency, California Public Utilities Commission (CPUC), California Regional Water Quality Control Board, San Francisco Bay Region 2 (RWQCB), Office of Historic Preservation, State Water Resources Control Board, Division of Drinking Water.
Personal observation#1 : *None of these agencies has any association with human health. CEQA reporting is not qualified enough to force the public to compromise on health concerns. Other agencies need to be involved to review this proposal, that are qualified to study the effect on " humans", not just wildlife and vegetation, or " environment. The checklist is completely devoid of our gravest humanitarian concerns. It is quite shocking that the project has not included any study to understand the potential impact of EMF waves on human lives, given that the transmission lines are potentially less than 60 feet from the closest dwellings. The city of Santa Clara needs to step in and have third party/ independent studies completed in favor of human health.*
Reference #2: Page 41 of report- Section 4.15. Electric and Magnetic Fields summary.
Personal observation#2 : *This consideration was completely absent earlier. Only after the residents raised their voices, this section was added. To our greatest disappointment, this section is copied over from an older report on the "South Loop Reconfiguration Project" from 2020. One would have expected that a new study would have been conducted for a project this size. The lack of due diligence and ignorance towards the specifics of this project are apparent and not acceptable. In fact we have found several sections of this older report as being reused across the entire report.*
The EMP map shared during the in person meeting had several flaws and we would like to question the viability of the study that was completed. What time of the day was the study completed and on what models were the values based on since these were done on assumption for the EMF values that would be there once the project is complete. Since we have seen the several sections of the report redundantly copied over from other reports, we would like a more detailed analysis of this report.
Regarding EMF concerns for human health, there are plenty of scientific studies that do indicate the grave concern on human health with EMF exposures and we cannot ignore this aspect. Here is a reference to an article and there are plenty of articles listed here under references:

https://psc.wi.gov/Documents/Brochures/EMF.pdf

There are not enough references listed in the draft report provided to us, and the explanation provided seems to be conveniently using studies that prove otherwise. This needs more investigation and references. The solution provided as raising the height of the poles and increasing the distance is non-existent. It was confirmed during the in person meeting that the design will not be altered and the height was already designed as required according to the SVP team present there. It seems that the preparers of this report did not even read the report after copying pasting from the old report as evident in the list of proposed solutions is not applicable here.

The live presentation on August 22nd showed the comparison of EMF values of household objects as a means to show that everyday household items carry a similar range of mG(milli Gauss) units. This comparison was inherently flawed since it mentioned that the household devices were producing those level at 1 feet while those indicated for 115KVf lines were at 60 feet. further these household devices do not operate 24X7 similar to the transmission lines.

There were a lot of citations of reports showcasing that no clear proof of EMF to human health exists but we would like to also point out certain states like Connecticut Department of Public Health have cited reports that have shown an increased incidence of childhood leukemia(Blood cancer) at avg exposure of only 3 mG. Also they have called out that some utility workers exposed to high levels of emf have increase risks of Lur Gehrig's disease.

They also call out that most impacts of EMF from high voltage lines dissipate at ~300 feet.

These are available on Page 2 & Page 3 of this report: https://portal.ct.gov/-/media/departments-and-agencies/dph/dph/environmental_health/eoha/pdf/emffactsheet2008pdf.pdf

This report has citations from WHO , National Institute of Environmental Health Sciences and California Department of Health Services.

https://www.niehs.nih.gov/sites/default/files/health/materials/electric_and_magnetic_fields_associated_with_the_use_of_electric_power_questions_and_answers_english_508.pdf

Some other questions around the EMF study map shared during presentation on Aug 22 2024:

1. Have you conducted an existing EMF study to identify the current value of the community ?
2. Are your emf study values based on the cumulative, or interference of existing emf and potential emf.
3. Emf value was calculated based on existing studies. What was the delta between mathematical modeling and actual values (from existing structures).
4. What is the delta between underground and overhead structures' emf values?
5. Can you provide the same for Route options B and C?
6. What happens when electrification of rail lines happens- as this is already planned for the future? Have you potentially considered the cumulative EMF effect in coexistence of the high power lines and with railway lines' electrification? Will the EMF values not be much higher then?
7. Can you share the mathematical modeling maps of Emf for 115k, 230k and the next two higher values of the power line ?
8. Can you share Emf maps from existing structures of 115k, 230 k and the next 2 higher values of the power line?
9. Please share any emf related information that you have especially if it contains assumptions for any calculations so we can understand the effects of current project and future projects.
10. Why does the electric pole structure proposed have wider diameter at the top? Can you share the design of the top of the pole ? Can it be extended by adding another section by bolting, welding or any other method? If so, what extra voltage can be added to the line?
11. what is the proposed power consumption of 95054 zip code for the next 5, 10 and 15 years in the master plan ?

Reference #3

Page 174- Section 5.21- Corona and induced current effect:

Personal observation#3

The railway line's proximity to the proposed high transmission lines is very concerning. The centerline distance from proposed lines to railway line is aproximately 50 feet per google maps with some margin for error. As per the report there are no Corona rings proposed for the 115KV lines. There seems to be

negligence in design in consideration of the hazards posed by these high voltage lines as Corona effect can transfer current to railway lines. All the residents are at a high risk of accidental hazards given the proximity of the railway line, this project is adding on to the hazards. This section is only stating information about what Corona effect is, as may be required by law, which by the way is again a copy paste from an old report. The only concern discussed in more depth is the audible noise level. The concerns are presented to imply that this is not significant by stating that 115KV lines pose less than significant risk**.**

Reference #4: Post meeting material from March 19th 2024 @https://santaclara.legistar.com/LegislationDetail.aspx?ID=6582415&GUID=E6E14646-3CF7-4D15-BB98-F18580696012&Options=&Search=

Personal observation#4: At surface level, it looks like Option #A was selected only based on Cost perspective, without any consideration to human health, young children, property values, Corona effect, long term sustainability perspective or any other factors. While its important to understand the results of CEQA study, its extremely critical to understand the negative impact of EMF on the many young children living around the proposed transmission lines. Without extensive research and study on the impact to young children and adult heath, we should not be approving such an incomplete proposal.

Page 6 of this document stated that the preferred route A cost of construction is $9.5 million. In discussions with several real estate agents in the region, I have unanimously found all to agree that the real estate values of residences in close proximity to power lines goes down. Its hard to find potential buyers and most folks refrain from buying a house too close to high power transmission lines. There are 1000 plus residences in the area affected by this project. Even if we were to make very rough assumptions, and assume minimal cost reduction in property values and take an average loss of $100,000 per property in the current year, that goes to $100,000,000 of loss of equity to the public. This is not even accounting the businesses affected by this project. This long explanation was to raise a point that if the selection of route A was saving money to the city, this is costing a huge financial loss to the public, which is not acceptable. This decrease in property values will also directly impact the tax collection by the Santa Clara Assessor and result in lower tax revenue coming into the city of Santa Clara.

Reference #5 : Page 49 of report- Figure 5.1-2. Wall separating residences and Lafayette Street.

Personal observation#5: *The picture is taken conveniently from the other side of the railway line which is actually Kingsbury street, inside a private community and not Lafayette street. This is further away from the proposed SVP lines. This is very misleading; see snapshots taken from Google maps below*

And this is what is included on the report:

The Mission Garden Townhome community has no walls as such and the main entry to residences face the road directly and are the most impacted. There are several other single family homes on Lafayette street with the same impact, having an entryway directly on the street. This and including other citations of reusing sections of older reports, is all in all absolutely unacceptable and instills distrust. This further shows incompetency of the agency/ agencies preparing this report.

Conclusion: *This project's initial study needs to expand beyond CEQA for approval from the public. The limited scope of CEQA has failed to address the following concerns we have:*

- *Health hazards due to EMF levels.- This is by far the gravest concern and CEQA is clearly not qualified to study that.*
- *Reduced property values- several references provided below.*
- *Loss of Aesthetic appeal for potential real estate buyers/ new and current businesses.*
- *Increase in audible noise levels during and post construction, which is already high in the area with presence of railway line and air traffic route.*
- *Increased fire hazard/ risk of other accidents.*
- *Induced current on railway lines with close proximity/ corona effect- CEQA report did not clearly address this for a 115KV line.*
- *Economic effect on the community from small to larger scale based on all of the above.*

We demand further investigation and revisit other routes or proposals to resolve the power needs of the city. We have to ensure our and our kids' health is not at stake in the name of development and

*infrastructure and are not in agreement for this project to move forward**. We cannot approve this to move forward as of now given the lack of study and absence of a satisfactory solution/ mitigation provided in favor/ assurance to public health.***

Additional References:
Research on effects of EMF on humans:

1. ***https://www.ncbi.nlm.nih.gov/pmc/articles/PMC6025786/***

This research reinforces the concerns of EMF exposure effect on human health.

2. ***https://www.epa.gov/radtown/electric-and-magnetic-fields-power-lines***

This resource suggests taking precautions and keeping distance or limiting exposure. Residents would no longer have either of these two options per the current proposals if they are living there 24-7.

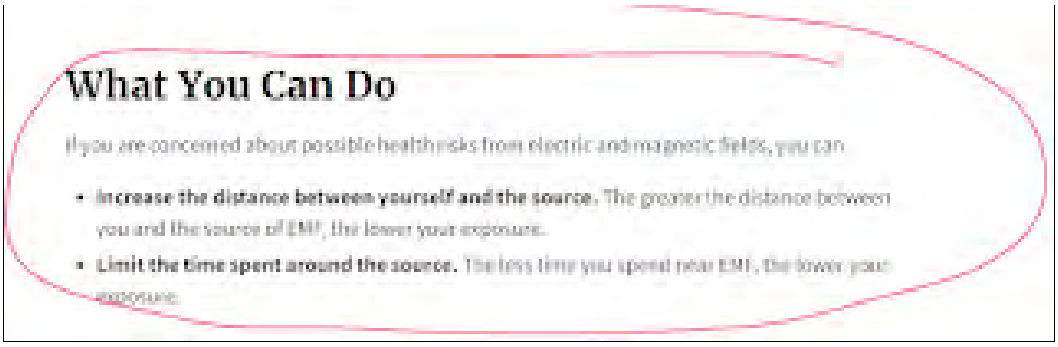

3. ***https://www.fastexpert.com/blog/should-i-buy-a-house-near-power-lines/***

These are points of view from a real estate expert who clearly states that property value declines proportionately to the distance of the property from high tension lines. People have apprehensions whether or not research clearly defines the risk. Potential buyers might have low priority for a property too close to a high tension power line.

4. ***https://orchard.com/blog/posts/power-lines-and-property-value***

Another research on real estate values lowered due to high tension power lines proximity.

Email: NRS-KRS 115 kV T-Line

From: Simple Yadav <simpleyadav123@gmail.com>
Sent: Friday, August 30, 2024 4:40 PM
To: info@siliconvalleypower.com; planningcommission@santaclaraca.gov; manager@santaclaraca.gov; AJackman@santaclaraca.gov; NRS-KRS Project; mayorandcouncil@santaclaraca.gov
Subject: Concerns Regarding Upcoming High Power Electric Wire Poles in Our Community for the upcoming SVP project connecting the Northern Receiving Station NRS to Kifer receiving station (KRS)- NRS-KRS 115kV Transmission Line Project

To Whomsoever it may concern,

We are residents of Santa Clara that will be negatively impacted by the "NRS-KRS 115kV Transmission Line Project". We have collectively reviewed the draft Initial Study/ Mitigated Negative declaration for "NRS-KRS 115kV Transmission Line Project" from July 2024. After reviewing this report and also attending the virtual and in person meetings, here are some references to emphasize our various concerns.

Reference #1 : CEQA's reporting includes these State reviewing agencies: California Air Resources Board (ARB), California Department of Fish and Wildlife, Bay Delta Region 3 (CDFW), California Department of Forestry and Fire Protection (CAL FIRE), California Department of Parks and Recreation, California Department of Toxic Substances Control (DTSC), California Department of Transportation, District 4 (DOT), California Department of Transportation, Division of Aeronautics (DOT), California Department of Transportation, Division of Transportation Planning (DOT), California Department of Water Resources (DWR), California Energy Commission, California Highway Patrol (CHP), California Native American Heritage Commission (NAHC), California Natural Resources Agency, California Public Utilities Commission (CPUC), California Regional Water Quality Control Board, San Francisco Bay Region 2 (RWQCB), Office of Historic Preservation, State Water Resources Control Board, Division of Drinking Water.

Personal observation#1 : *None of these agencies has any association with human health. CEQA reporting is not qualified enough to force the public to compromise on health concerns. Other agencies need to be involved to review this proposal, that are qualified to study the effect on " humans", not just wildlife and vegetation, or " environment. The checklist is completely devoid of our gravest humanitarian concerns. It is quite shocking that the project has not included any study to understand the potential impact of EMF waves on human lives, given that the transmission lines are potentially less than 60 feet from the closest dwellings. The city of Santa Clara needs to step in and have third party/ independent studies completed in favor of human health.*

Reference #2: Page 41 of report- Section 4.15. Electric and Magnetic Fields summary.

Personal observation#2 : *This consideration was completely absent earlier. Only after the residents raised their voices, this section was added. To our greatest disappointment, this section is copied over from an older report on the "South Loop Reconfiguration Project" from 2020. One would have expected that a new study would have been conducted for a project this size. The lack of due diligence and ignorance towards the specifics of this project are apparent and not acceptable. In fact we have found several sections of this older report as being reused across the entire report.*

The EMP map shared during the in person meeting had several flaws and we would like to question the viability of the study that was completed. What time of the day was the study completed and on what models were the values based on since these were done on assumption for the EMF values that would be there once the project is complete. Since we have seen the several sections of the report redundantly copied over from other reports, we would like a more detailed analysis of this report.

Regarding EMF concerns for human health, there are plenty of scientific studies that do indicate the grave concern on human health with EMF exposures and we cannot ignore this aspect. Here is a reference to an article and there are plenty of articles listed here under references:

https://psc.wi.gov/Documents/Brochures/EMF.pdf

There are not enough references listed in the draft report provided to us, and the explanation provided seems to be conveniently using studies that prove otherwise. This needs more investigation and references. The solution provided as raising the height of the poles and increasing the distance is non-existent. It was confirmed during the in person meeting that the design will not be altered and the height was already designed as required according to the SVP team present there. It seems that the preparers of this report did not even read the report after copying pasting from the old report as evident in the list of proposed solutions is not applicable here.

The live presentation on August 22nd showed the comparison of EMF values of household objects as a means to show that everyday household items carry a similar range of mG(milli Gauss) units. This comparison was inherently flawed since it mentioned that the household devices were producing those level at 1 feet while those indicated for 115KVf lines were at 60 feet. further these household devices do not operate 24X7 similar to the transmission lines.

There were a lot of citations of reports showcasing that no clear proof of EMF to human health exists but we would like to also point out certain states like Connecticut Department of Public Health have cited reports that have shown an increased incidence of childhood leukemia(Blood cancer) at avg exposure of only 3 mG. Also they have called out that some utility workers exposed to high levels of emf have increase risks of Lur Gehrig's disease.

They also call out that most impacts of EMF from high voltage lines dissipate at ~300 feet.

These are available on Page 2 & Page 3 of this report: https://portal.ct.gov/-/media/departments-and-agencies/dph/dph/environmental_health/eoha/pdf/emffactsheet2008pdf.pdf

This report has citations from WHO , National Institute of Environmental Health Sciences and California Department of Health Services.

https://www.niehs.nih.gov/sites/default/files/health/materials/electric_and_magnetic_fields_associated_with_the_use_of_electric_power_questions_and_answers_english_508.pdf

Some other questions around the EMF study map shared during presentation on Aug 22 2024:

1. Have you conducted an existing EMF study to identify the current value of the community ?
2. Are your emf study values based on the cumulative, or interference of existing emf and potential emf.
3. Emf value was calculated based on existing studies. What was the delta between mathematical modeling and actual values (from existing structures).
4. What is the delta between underground and overhead structures' emf values?
5. Can you provide the same for Route options B and C?
6. What happens when electrification of rail lines happens- as this is already planned for the future? Have you potentially considered the cumulative EMF effect in coexistence of the high power lines and with railway lines' electrification? Will the EMF values not be much higher then?
7. Can you share the mathematical modeling maps of Emf for 115k, 230k and the next two higher values of the power line ?
8. Can you share Emf maps from existing structures of 115k, 230 k and the next 2 higher values of the power line?
9. Please share any emf related information that you have especially if it contains assumptions for any calculations so we can understand the effects of current project and future projects.
10. Why does the electric pole structure proposed have wider diameter at the top? Can you share the design of the top of the pole ? Can it be extended by adding another section by bolting, welding or any other method? If so, what extra voltage can be added to the line?
11. what is the proposed power consumption of 95054 zip code for the next 5, 10 and 15 years in the master plan ?

Reference #3

Page 174- Section 5.21- Corona and induced current effect:

Personal observation#3

The railway line's proximity to the proposed high transmission lines is very concerning. The centerline distance from proposed lines to railway line is aproximately 50 feet per google maps with some margin for error. As per the report there are no Corona rings proposed for the 115KV lines. There seems to be

negligence in design in consideration of the hazards posed by these high voltage lines as Corona effect can transfer current to railway lines. All the residents are at a high risk of accidental hazards given the proximity of the railway line, this project is adding on to the hazards. This section is only stating information about what Corona effect is, as may be required by law, which by the way is again a copy paste from an old report. The only concern discussed in more depth is the audible noise level. The concerns are presented to imply that this is not significant by stating that 115KV lines pose less than significant risk**.**

Reference #4: Post meeting material from March 19th 2024 @https://santaclara.legistar.com/LegislationDetail.aspx?ID=6582415&GUID=E6E14646-3CF7-4D15-BB98-F18580696012&Options=&Search=

Personal observation#4: At surface level, it looks like Option #A was selected only based on Cost perspective, without any consideration to human health, young children, property values, Corona effect, long term sustainability perspective or any other factors. While its important to understand the results of CEQA study, its extremely critical to understand the negative impact of EMF on the many young children living around the proposed transmission lines. Without extensive research and study on the impact to young children and adult heath, we should not be approving such an incomplete proposal.

Page 6 of this document stated that the preferred route A cost of construction is $9.5 million. In discussions with several real estate agents in the region, I have unanimously found all to agree that the real estate values of residences in close proximity to power lines goes down. Its hard to find potential buyers and most folks refrain from buying a house too close to high power transmission lines. There are 1000 plus residences in the area affected by this project. Even if we were to make very rough assumptions, and assume minimal cost reduction in property values and take an average loss of $100,000 per property in the current year, that goes to $100,000,000 of loss of equity to the public. This is not even accounting the businesses affected by this project. This long explanation was to raise a point that if the selection of route A was saving money to the city, this is costing a huge financial loss to the public, which is not acceptable. This decrease in property values will also directly impact the tax collection by the Santa Clara Assessor and result in lower tax revenue coming into the city of Santa Clara.

Reference #5 : Page 49 of report- Figure 5.1-2. Wall separating residences and Lafayette Street.

Personal observation#5: *The picture is taken conveniently from the other side of the railway line which is actually Kingsbury street, inside a private community and not Lafayette street. This is further away from the proposed SVP lines. This is very misleading; see snapshots taken from Google maps below*

And this is what is included on the report:

The Mission Garden Townhome community has no walls as such and the main entry to residences face the road directly and are the most impacted. There are several other single family homes on Lafayette street with the same impact, having an entryway directly on the street. This and including other citations of reusing sections of older reports, is all in all absolutely unacceptable and instills distrust. This further shows incompetency of the agency/ agencies preparing this report.

Conclusion: *This project's initial study needs to expand beyond CEQA for approval from the public. The limited scope of CEQA has failed to address the following concerns we have:*

- *Health hazards due to EMF levels.- This is by far the gravest concern and CEQA is clearly not qualified to study that.*
- *Reduced property values- several references provided below.*
- *Loss of Aesthetic appeal for potential real estate buyers/ new and current businesses.*
- *Increase in audible noise levels during and post construction, which is already high in the area with presence of railway line and air traffic route.*
- *Increased fire hazard/ risk of other accidents.*
- *Induced current on railway lines with close proximity/ corona effect- CEQA report did not clearly address this for a 115KV line.*
- *Economic effect on the community from small to larger scale based on all of the above.*

We demand further investigation and revisit other routes or proposals to resolve the power needs of the city. We have to ensure our and our kids' health is not at stake in the name of development and infrastructure and are not in agreement for this project to move forward. ***We cannot approve this to***

move forward as of now given the lack of study and absence of a satisfactory solution/ mitigation provided in favor/ assurance to public health.

Additional References:
Research on effects of EMF on humans:

1. ***https://www.ncbi.nlm.nih.gov/pmc/articles/PMC6025786/***

This research reinforces the concerns of EMF exposure effect on human health.

2. ***https://www.epa.gov/radtown/electric-and-magnetic-fields-power-lines***

This resource suggests taking precautions and keeping distance or limiting exposure. Residents would no longer have either of these two options per the current proposals if they are living there 24-7.

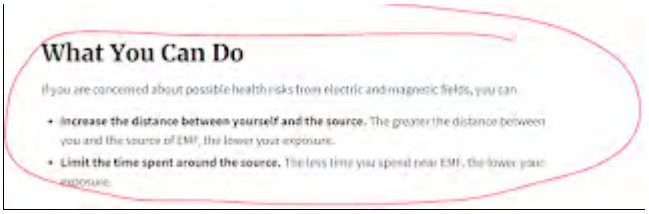

3. ***https://www.fastexpert.com/blog/should-i-buy-a-house-near-power-lines/***

These are points of view from a real estate expert who clearly states that property value declines proportionately to the distance of the property from high tension lines. People have apprehensions whether or not research clearly defines the risk. Potential buyers might have low priority for a property too close to a high tension power line.

4. ***https://orchard.com/blog/posts/power-lines-and-property-value***

Another research on real estate values lowered due to high tension power lines proximity.

Thanks,
Simple yadav

Email: NRS-KRS 115 kV T-Line

From: Niaz Khan <nkhan1100@yahoo.com>
Sent: Friday, August 30, 2024 4:12 PM
To: NRS-KRS Project; mayorandcouncil@santaclaraca.gov; info@siliconvalleypower.com; planningcommission@santaclaraca.gov; manager@santaclaraca.gov; AJackman@santaclaraca.gov
Subject: Concerns Regarding Upcoming High Power Electric Wire Poles in Our Community for the upcoming SVP project connecting the Northern Receiving Station NRS to Kifer receiving station (KRS)- NRS-KRS 115kV Transmission Line Project

To Whomsoever it may concern,

We are residents of Santa Clara that will be negatively impacted by the "NRS-KRS 115kV Transmission Line Project". We have collectively reviewed the draft Initial Study/ Mitigated Negative declaration for "NRS-KRS 115kV Transmission Line Project" from July 2024. After reviewing this report and also attending the virtual and in person meetings, here are some references to emphasize our various concerns.

Reference #1 : CEQA's reporting includes these State reviewing agencies: California Air Resources Board (ARB), California Department of Fish and Wildlife, Bay Delta Region 3 (CDFW), California Department of Forestry and Fire Protection (CAL FIRE), California Department of Parks and Recreation, California Department of Toxic Substances Control (DTSC), California Department of Transportation, District 4 (DOT), California Department of Transportation, Division of Aeronautics (DOT), California Department of Transportation, Division of Transportation Planning (DOT), California Department of Water Resources (DWR), California Energy Commission, California Highway Patrol (CHP), California Native American Heritage Commission (NAHC), California Natural Resources Agency, California Public Utilities Commission (CPUC), California Regional Water Quality Control Board, San Francisco Bay Region 2 (RWQCB), Office of Historic Preservation, State Water Resources Control Board, Division of Drinking Water.

Personal observation#1 : *None of these agencies has any association with human health. CEQA reporting is not qualified enough to force the public to compromise on health concerns. Other agencies need to be involved to review this proposal, that are qualified to study the effect on " humans", not just wildlife and vegetation, or " environment. The checklist is completely devoid of our gravest humanitarian concerns. It is quite shocking that the project has not included any study to understand the potential impact of EMF waves on human lives, given that the transmission lines are potentially less than 60 feet from the closest dwellings. The city of Santa Clara needs to step in and have third party/ independent studies completed in favor of human health.*

Reference #2: Page 41 of report- Section 4.15. Electric and Magnetic Fields summary.

Personal observation#2 : *This consideration was completely absent earlier. Only after the residents raised their voices, this section was added. To our greatest disappointment, this section is copied over from an older report on the "South Loop Reconfiguration Project" from 2020. One would have expected that a new study would have been conducted for a project this size. The lack of due diligence and ignorance towards the specifics of this project are apparent and not acceptable. In fact we have found several sections of this older report as being reused across the entire report.*

The EMP map shared during the in person meeting had several flaws and we would like to question the viability of the study that was completed. What time of the day was the study completed and on what models were the values based on since these were done on assumption for the EMF values that would be there once the project is complete. Since we have seen the several sections of the report redundantly copied over from other reports, we would like a more detailed analysis of this report.

Regarding EMF concerns for human health, there are plenty of scientific studies that do indicate the grave concern on human health with EMF exposures and we cannot ignore this aspect. Here is a reference to an article and there are plenty of articles listed here under references:

https://psc.wi.gov/Documents/Brochures/EMF.pdf

There are not enough references listed in the draft report provided to us, and the explanation provided seems to be conveniently using studies that prove otherwise. This needs more investigation and references. The solution provided as raising the height of the poles and increasing the distance is non-existent. It was confirmed during the in person meeting that the design will not be altered and the height was already designed as required according to the SVP team present there. It seems that the preparers of this report did not even read the report after copying pasting from the old report as evident in the list of proposed solutions is not applicable here.

The live presentation on August 22nd showed the comparison of EMF values of household objects as a means to show that everyday household items carry a similar range of mG(milli Gauss) units. This comparison was inherently flawed since it mentioned that the household devices were producing those level at 1 feet while those indicated for 115KVf lines were at 60 feet. further these household devices do not operate 24X7 similar to the transmission lines.

There were a lot of citations of reports showcasing that no clear proof of EMF to human health exists but we would like to also point out certain states like Connecticut Department of Public Health have cited reports that have shown an increased incidence of childhood leukemia(Blood cancer) at avg exposure of only 3 mG. Also they have called out that some utility workers exposed to high levels of emf have increase risks of Lur Gehrig's disease.

They also call out that most impacts of EMF from high voltage lines dissipate at ~300 feet. These are available on Page 2 & Page 3 of this report: https://portal.ct.gov/-/media/departments-and-agencies/dph/dph/environmental_health/eoha/pdf/emffactsheet2008pdf.pdf

This report has citations from WHO , National Institute of Environmental Health Sciences and California Department of Health Services.

https://www.niehs.nih.gov/sites/default/files/health/materials/electric_and_magnetic_fields_associated_with_the_use_of_electric_power_questions_and_answers_english_508.pdf

Some other questions around the EMF study map shared during presentation on Aug 22 2024:

1. Have you conducted an existing EMF study to identify the current value of the community ?

2. Are your emf study values based on the cumulative, or interference of existing emf and potential emf.

3. Emf value was calculated based on existing studies. What was the delta between mathematical modeling and actual values (from existing structures).

4. What is the delta between underground and overhead structures' emf values?

5. Can you provide the same for Route options B and C?

6. What happens when electrification of rail lines happens- as this is already planned for the future? Have you potentially considered the cumulative EMF effect in coexistence of the high power lines and with railway lines' electrification? Will the EMF values not be much higher then?

7. Can you share the mathematical modeling maps of Emf for 115k, 230k and the next two higher values of the power line ?

8. Can you share Emf maps from existing structures of 115k, 230 k and the next 2 higher values of the power line?

9. Please share any emf related information that you have especially if it contains assumptions for any calculations so we can understand the effects of current project and future projects.

10. Why does the electric pole structure proposed have wider diameter at the top? Can you share the design of the top of the pole ? Can it be extended by adding another section by bolting, welding or any other method? If so, what extra voltage can be added to the line?

11. what is the proposed power consumption of 95054 zip code for the next 5, 10 and 15 years in the master plan ?

Reference #3

Page 174- Section 5.21- Corona and induced current effect:

Personal observation#3

The railway line's proximity to the proposed high transmission lines is very concerning. The centerline distance from proposed lines to railway line is aproximately 50 feet per google maps with some margin for error. As per the report there are no Corona rings proposed for the 115KV lines. There seems to be negligence in design in consideration of the hazards posed by these high voltage lines as Corona effect can transfer current to railway lines. All the residents are at a high risk of accidental hazards given the proximity of the railway line, this project is adding on to the hazards. This section is only stating information about what Corona effect is, as may be required by law, which by the way is again a copy paste from an old report. The only concern discussed in more depth is the audible noise level. The concerns are presented to imply that this is not significant by stating that 115KV lines pose less than significant risk**.**

Reference #4: Post meeting material from March 19th 2024
@https://santaclara.legistar.com/LegislationDetail.aspx?ID=6582415&GUID=E6E14646-3CF7-4D15-BB98-F18580696012&Options=&Search=

Personal observation#4: At surface level, it looks like Option #A was selected only based on Cost perspective, without any consideration to human health, young children, property values, Corona effect, long term sustainability perspective or any other factors. While its important to understand the results of CEQA study, its extremely critical to understand the negative impact of EMF on the many young children living around the proposed transmission lines. Without extensive research and study on the impact to young children and adult heath, we should not be approving such an incomplete proposal.

Page 6 of this document stated that the preferred route A cost of construction is $9.5 million. In discussions with several real estate agents in the region, I have unanimously found all to agree that the real estate values of residences in close proximity to power lines goes down. Its hard to find potential buyers and most folks refrain from buying a house too close to high power transmission lines. There are 1000 plus residences in the area affected by this project. Even if we were to make very rough assumptions, and assume minimal cost reduction in property values and take an average loss of $100,000 per property in the current year, that goes to $100,000,000 of loss of equity to the public. This is not even accounting the businesses affected by this project. This long explanation was to raise a point that if the selection of route A was saving money to the city, this is costing a huge financial loss to the public, which is not acceptable. This decrease in property values will also directly impact the tax collection by the Santa Clara Assessor and result in lower tax revenue coming into the city of Santa Clara.

Conclusion: *This project's initial study needs to expand beyond CEQA for approval from the public. The limited scope of CEQA has failed to address the following concerns we have:*

- *Health hazards due to EMF levels.- This is by far the gravest concern and CEQA is clearly not qualified to study that.*
- *Reduced property values- several references provided below.*
- *Loss of Aesthetic appeal for potential real estate buyers/ new and current businesses.*
- *Increase in audible noise levels during and post construction, which is already high in the area with presence of railway line and air traffic route.*
- *Increased fire hazard/ risk of other accidents.*
- *Induced current on railway lines with close proximity/ corona effect- CEQA report did not clearly address this for a 115KV line.*
- *Economic effect on the community from small to larger scale based on all of the above.*

*We demand further investigation and revisit other routes or proposals to resolve the power needs of the city. We have to ensure our and our kids' health is not at stake in the name of development and infrastructure and are not in agreement for this project to move forward****. We cannot approve this to move forward as of now given the lack of study and absence of a satisfactory solution/ mitigation provided in favor/ assurance to public health.***

Thank you for your attention to this pressing matter, and eagerly await your response.

Sincerely
Niaz Khan
2134 Payne Place, Santa Clara, 95054
nkhan1100@yahoo.com
Payne Place Community

Email: NRS-KRS 115 kV T-Line

From: kuldeep singh <ksingh_hyd@yahoo.com>
Sent: Friday, August 30, 2024 3:57 PM
To: NRS-KRS Project
Subject: Fwd: Concerns Regarding Upcoming High Power Electric Wire Poles in Our Community for the upcoming SVP project connecting the Northern Receiving Station NRS to Kifer receiving station (KRS)- NRS-KRS 115kV Transmission Line Project

Begin forwarded message:

From: kuldeep singh <ksingh_hyd@yahoo.com>
Date: August 30, 2024 at 3:49:14 PM PDT
To: info@siliconvalleypower.com, planningcommission@santaclaraca.gov, manager@santaclaraca.gov, AJackman@santaclaraca.gov
Subject: Concerns Regarding Upcoming High Power Electric Wire Poles in Our Community for the upcoming SVP project connecting the Northern Receiving Station NRS to Kifer receiving station (KRS)- NRS-KRS 115kV Transmission Line Project

To Whomsoever it may concern,
We are residents of Santa Clara that will be negatively impacted by the "NRS-KRS 115kV Transmission Line Project". We have collectively reviewed the draft Initial Study/ Mitigated Negative declaration for "NRS-KRS 115kV Transmission Line Project" from July 2024. After reviewing this report and also attending the virtual and in person meetings, here are some references to emphasize our various concerns.
Reference #1 : CEQA's reporting includes these State reviewing agencies: California Air Resources Board (ARB), California Department of Fish and Wildlife, Bay Delta Region 3 (CDFW), California Department of Forestry and Fire Protection (CAL FIRE), California Department of Parks and Recreation, California Department of Toxic Substances Control (DTSC), California Department of Transportation, District 4 (DOT), California Department of Transportation, Division of Aeronautics (DOT), California Department of Transportation, Division of Transportation Planning (DOT), California Department of Water Resources (DWR), California Energy Commission, California Highway Patrol (CHP), California Native American Heritage Commission (NAHC), California Natural Resources Agency, California Public Utilities Commission (CPUC), California Regional Water Quality Control Board, San Francisco Bay Region 2 (RWQCB), Office of Historic Preservation, State Water Resources Control Board, Division of Drinking Water.
Personal observation#1 : *None of these agencies has any association with human health. CEQA reporting is not qualified enough to force the public to compromise on health concerns. Other agencies need to be involved to review this proposal, that are qualified to study the effect on " humans", not just wildlife and vegetation, or " environment. The checklist is completely devoid of our gravest humanitarian concerns. It is quite shocking that the project has not included any study to understand the potential impact of EMF waves on human lives, given that the transmission lines are potentially less than 60 feet from the closest dwellings. The city of Santa Clara needs to step in and have third party/ independent studies completed in favor of human health.*
Reference #2: Page 41 of report- Section 4.15. Electric and Magnetic Fields summary.
Personal observation#2 : *This consideration was completely absent earlier. Only after the residents raised their voices, this section was added. To our greatest disappointment, this section is copied over from an older report on the "South Loop Reconfiguration Project" from 2020. One would have expected that a new study would have been conducted for a project this size. The lack of due diligence and*

ignorance towards the specifics of this project are apparent and not acceptable. In fact we have found several sections of this older report as being reused across the entire report.
The EMP map shared during the in person meeting had several flaws and we would like to question the viability of the study that was completed. What time of the day was the study completed and on what models were the values based on since these were done on assumption for the EMF values that would be there once the project is complete. Since we have seen the several sections of the report redundantly copied over from other reports, we would like a more detailed analysis of this report.
Regarding EMF concerns for human health, there are plenty of scientific studies that do indicate the grave concern on human health with EMF exposures and we cannot ignore this aspect. Here is a reference to an article and there are plenty of articles listed here under references:
https://psc.wi.gov/Documents/Brochures/EMF.pdf
There are not enough references listed in the draft report provided to us, and the explanation provided seems to be conveniently using studies that prove otherwise. This needs more investigation and references. The solution provided as raising the height of the poles and increasing the distance is non-existent. It was confirmed during the in person meeting that the design will not be altered and the height was already designed as required according to the SVP team present there. It seems that the preparers of this report did not even read the report after copying pasting from the old report as evident in the list of proposed solutions is not applicable here.
The live presentation on August 22nd showed the comparison of EMF values of household objects as a means to show that everyday household items carry a similar range of mG(milli Gauss) units. This comparison was inherently flawed since it mentioned that the household devices were producing those level at 1 feet while those indicated for 115KVf lines were at 60 feet. further these household devices do not operate 24X7 similar to the transmission lines.
There were a lot of citations of reports showcasing that no clear proof of EMF to human health exists but we would like to also point out certain states like Connecticut Department of Public Health have cited reports that have shown an increased incidence of childhood leukemia(Blood cancer) at avg exposure of only 3 mG. Also they have called out that some utility workers exposed to high levels of emf have increase risks of Lur Gehrig's disease.
They also call out that most impacts of EMF from high voltage lines dissipate at ~300 feet.
These are available on Page 2 & Page 3 of this report: https://portal.ct.gov/-/media/departments-and-agencies/dph/dph/environmental_health/eoha/pdf/emffactsheet2008pdf.pdf
This report has citations from WHO , National Institute of Environmental Health Sciences and California Department of Health Services.
https://www.niehs.nih.gov/sites/default/files/health/materials/electric_and_magnetic_fields_associated_with_the_use_of_electric_power_questions_and_answers_english_508.pdf
Some other questions around the EMF study map shared during presentation on Aug 22 2024:
1. Have you conducted an existing EMF study to identify the current value of the community ?
2. Are your emf study values based on the cumulative, or interference of existing emf and potential emf.
3. Emf value was calculated based on existing studies. What was the delta between mathematical modeling and actual values (from existing structures).
4. What is the delta between underground and overhead structures' emf values?
5. Can you provide the same for Route options B and C?
6. What happens when electrification of rail lines happens- as this is already planned for the future? Have you potentially considered the cumulative EMF effect in coexistence of the high power lines and with railway lines' electrification? Will the EMF values not be much higher then?
7. Can you share the mathematical modeling maps of Emf for 115k, 230k and the next two higher values of the power line ?
8. Can you share Emf maps from existing structures of 115k, 230 k and the next 2 higher values of the power line?
9. Please share any emf related information that you have especially if it contains assumptions for any calculations so we can understand the effects of current project and future projects.

10. Why does the electric pole structure proposed have wider diameter at the top? Can you share the design of the top of the pole ? Can it be extended by adding another section by bolting, welding or any other method? If so, what extra voltage can be added to the line?
11. what is the proposed power consumption of 95054 zip code for the next 5, 10 and 15 years in the master plan ?

Reference #3

Page 174- Section 5.21- Corona and induced current effect:

Personal observation#3

The railway line's proximity to the proposed high transmission lines is very concerning. The centerline distance from proposed lines to railway line is aproximately 50 feet per google maps with some margin for error. As per the report there are no Corona rings proposed for the 115KV lines. There seems to be negligence in design in consideration of the hazards posed by these high voltage lines as Corona effect can transfer current to railway lines. All the residents are at a high risk of accidental hazards given the proximity of the railway line, this project is adding on to the hazards. This section is only stating information about what Corona effect is, as may be required by law, which by the way is again a copy paste from an old report. The only concern discussed in more depth is the audible noise level. The concerns are presented to imply that this is not significant by stating that 115KV lines pose less than significant risk**.**

Reference #4: Post meeting material from March 19th 2024 @https://santaclara.legistar.com/LegislationDetail.aspx?ID=6582415&GUID=E6E14646-3CF7-4D15-BB98-F18580696012&Options=&Search=

Personal observation#4: At surface level, it looks like Option #A was selected only based on Cost perspective, without any consideration to human health, young children, property values, Corona effect, long term sustainability perspective or any other factors. While its important to understand the results of CEQA study, its extremely critical to understand the negative impact of EMF on the many young children living around the proposed transmission lines. Without extensive research and study on the impact to young children and adult heath, we should not be approving such an incomplete proposal.
Page 6 of this document stated that the preferred route A cost of construction is $9.5 million. In discussions with several real estate agents in the region, I have unanimously found all to agree that the real estate values of residences in close proximity to power lines goes down. Its hard to find potential buyers and most folks refrain from buying a house too close to high power transmission lines. There are 1000 plus residences in the area affected by this project. Even if we were to make very rough assumptions, and assume minimal cost reduction in property values and take an average loss of $100,000 per property in the current year, that goes to $100,000,000 of loss of equity to the public. This is not even accounting the businesses affected by this project. This long explanation was to raise a point that if the selection of route A was saving money to the city, this is costing a huge financial loss to the public, which is not acceptable. This decrease in property values will also directly impact the tax collection by the Santa Clara Assessor and result in lower tax revenue coming into the city of Santa Clara.

Reference #5 : Page 49 of report- Figure 5.1-2. Wall separating residences and Lafayette Street.

Personal observation#5: *The picture is taken conveniently from the other side of the railway line which is actually Kingsbury street, inside a private community and not Lafayette street. This is further away from the proposed SVP lines. This is very misleading; see snapshots taken from Google maps below*

And this is what is included on the report:

The Mission Garden Townhome community has no walls as such and the main entry to residences face the road directly and are the most impacted. There are several other single family homes on Lafayette street with the same impact, having an entryway directly on the street. This and including other citations of reusing sections of older reports, is all in all absolutely unacceptable and instills distrust. This further shows incompetency of the agency/ agencies preparing this report.

Conclusion: *This project's initial study needs to expand beyond CEQA for approval from the public. The limited scope of CEQA has failed to address the following concerns we have:*

- *Health hazards due to EMF levels.- This is by far the gravest concern and CEQA is clearly not qualified to study that.*
- *Reduced property values- several references provided below.*
- *Loss of Aesthetic appeal for potential real estate buyers/ new and current businesses.*
- *Increase in audible noise levels during and post construction, which is already high in the area with presence of railway line and air traffic route.*
- *Increased fire hazard/ risk of other accidents.*
- *Induced current on railway lines with close proximity/ corona effect- CEQA report did not clearly address this for a 115KV line.*
- *Economic effect on the community from small to larger scale based on all of the above.*

*We demand further investigation and revisit other routes or proposals to resolve the power needs of the city. We have to ensure our and our kids' health is not at stake in the name of development and infrastructure and are not in agreement for this project to move forward**. We cannot approve this to move forward as of now given the lack of study and absence of a satisfactory solution/ mitigation provided in favor/ assurance to public health.***

Additional References:

Research on effects of EMF on humans:

1. ***https://www.ncbi.nlm.nih.gov/pmc/articles/PMC6025786/***

This research reinforces the concerns of EMF exposure effect on human health.

2. ***https://www.epa.gov/radtown/electric-and-magnetic-fields-power-lines***

This resource suggests taking precautions and keeping distance or limiting exposure. Residents would no longer have either of these two options per the current proposals if they are living there 24-7.

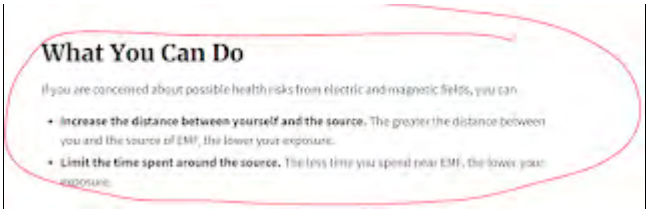
What You Can Do

If you are concerned about possible health risks from electric and magnetic fields, you can

- **Increase the distance between yourself and the source.** The greater the distance between you and the source of EMF, the lower your exposure.
- **Limit the time spent around the source.** The less time you spend near EMF, the lower your exposure.

3. ***https://www.fastexpert.com/blog/should-i-buy-a-house-near-power-lines/***

These are points of view from a real estate expert who clearly states that property value declines proportionately to the distance of the property from high tension lines. People have apprehensions whether or not research clearly defines the risk. Potential buyers might have low priority for a property too close to a high tension power line.

4. ***https://orchard.com/blog/posts/power-lines-and-property-value***

Another research on real estate values lowered due to high tension power lines proximity.

Email: NRS-KRS 115 kV T-Line

From: Paddy Subbian <psubbian@gmail.com>
Sent: Friday, August 30, 2024 3:20 PM
To: NRS-KRS Project; mayorandcouncil@santaclaraca.gov; info@siliconvalleypower.com; planningcommission@santaclaraca.gov; manager@santaclaraca.gov; AJackman@santaclaraca.gov
Cc: Paddy Subbian
Subject: Subject: Concerns Regarding Upcoming High Power Electric Wire Poles in Our Community for the upcoming SVP project connecting the Northern Receiving Station NRS to Kifer receiving station (KRS)- NRS-KRS 115kV Transmission Line Project

To SVP and Whomsoever it may concern,

We are residents of Santa Clara that will be negatively impacted by the "NRS-KRS 115kV Transmission Line Project". We have collectively reviewed the draft Initial Study/ Mitigated Negative declaration for "NRS-KRS 115kV Transmission Line Project" from July 2024. After reviewing this report and also attending the virtual and in person meetings, here are some references to emphasize our various concerns.

Reference #1 : CEQA's reporting includes these State reviewing agencies: California Air Resources Board (ARB), California Department of Fish and Wildlife, Bay Delta Region 3 (CDFW), California Department of Forestry and Fire Protection (CAL FIRE), California Department of Parks and Recreation, California Department of Toxic Substances Control (DTSC), California Department of Transportation, District 4 (DOT), California Department of Transportation, Division of Aeronautics (DOT), California Department of Transportation, Division of Transportation Planning (DOT), California Department of Water Resources (DWR), California Energy Commission, California Highway Patrol (CHP), California Native American Heritage Commission (NAHC), California Natural Resources Agency, California Public Utilities Commission (CPUC), California Regional Water Quality Control Board, San Francisco Bay Region 2 (RWQCB), Office of Historic Preservation, State Water Resources Control Board, Division of Drinking Water.

Personal observation#1 : *None of these agencies has any association with human health. CEQA reporting is not qualified enough to force the public to compromise on health concerns. Other agencies need to be involved to review this proposal, that are qualified to study the effect on " humans", not just wildlife and vegetation, or " environment. The checklist is completely devoid of our gravest humanitarian concerns. It is quite shocking that the project has not included any study to understand the potential impact of EMF waves on human lives, given that the transmission lines are potentially less than 60 feet from the closest dwellings. The city of Santa Clara needs to step in and have third party/ independent studies completed in favor of human health.*

Reference #2: Page 41 of report- Section 4.15. Electric and Magnetic Fields summary.

Personal observation#2 : *This consideration was completely absent earlier. Only after the residents raised their voices, this section was added. To our greatest disappointment, this section is copied over from an older report on the "South Loop Reconfiguration Project" from 2020. One would have expected that a new study would have been conducted for a project this size. The lack of due diligence and ignorance towards the specifics of this project are apparent and not acceptable. In fact we have found several sections of this older report as being reused across the entire report.*

The EMP map shared during the in person meeting had several flaws and we would like to question the viability of the study that was completed. What time of the day was the study completed and on what models were the values based on since these were done on assumption for the EMF values that would be there once the project is complete. Since we have seen the several sections of the report redundantly copied over from other reports, we would like a more detailed analysis of this report.

Regarding EMF concerns for human health, there are plenty of scientific studies that do indicate the grave concern on human health with EMF exposures and we cannot ignore this aspect. Here is a reference to an article and there are plenty of articles listed here under references:
https://psc.wi.gov/Documents/Brochures/EMF.pdf
There are not enough references listed in the draft report provided to us, and the explanation provided seems to be conveniently using studies that prove otherwise. This needs more investigation and references. The solution provided as raising the height of the poles and increasing the distance is non-existent. It was confirmed during the in person meeting that the design will not be altered and the height was already designed as required according to the SVP team present there. It seems that the preparers of this report did not even read the report after copying pasting from the old report as evident in the list of proposed solutions is not applicable here.
The live presentation on August 22nd showed the comparison of EMF values of household objects as a means to show that everyday household items carry a similar range of mG(milli Gauss) units. This comparison was inherently flawed since it mentioned that the household devices were producing those level at 1 feet while those indicated for 115KVf lines were at 60 feet. further these household devices do not operate 24X7 similar to the transmission lines.
There were a lot of citations of reports showcasing that no clear proof of EMF to human health exists but we would like to also point out certain states like Connecticut Department of Public Health have cited reports that have shown an increased incidence of childhood leukemia(Blood cancer) at avg exposure of only 3 mG. Also they have called out that some utility workers exposed to high levels of emf have increase risks of Lur Gehrig's disease.
They also call out that most impacts of EMF from high voltage lines dissipate at ~300 feet.
These are available on Page 2 & Page 3 of this report: https://portal.ct.gov/-/media/departments-and-agencies/dph/dph/environmental_health/eoha/pdf/emffactsheet2008pdf.pdf
This report has citations from WHO , National Institute of Environmental Health Sciences and California Department of Health Services.
https://www.niehs.nih.gov/sites/default/files/health/materials/electric_and_magnetic_fields_associated_with_the_use_of_electric_power_questions_and_answers_english_508.pdf
Some other questions around the EMF study map shared during presentation on Aug 22 2024:
1. Have you conducted an existing EMF study to identify the current value of the community ?
2. Are your emf study values based on the cumulative, or interference of existing emf and potential emf.
3. Emf value was calculated based on existing studies. What was the delta between mathematical modeling and actual values (from existing structures).
4. What is the delta between underground and overhead structures' emf values?
5. Can you provide the same for Route options B and C?
6. What happens when electrification of rail lines happens- as this is already planned for the future? Have you potentially considered the cumulative EMF effect in coexistence of the high power lines and with railway lines' electrification? Will the EMF values not be much higher then?
7. Can you share the mathematical modeling maps of Emf for 115k, 230k and the next two higher values of the power line ?
8. Can you share Emf maps from existing structures of 115k, 230 k and the next 2 higher values of the power line?
9. Please share any emf related information that you have especially if it contains assumptions for any calculations so we can understand the effects of current project and future projects.
10. Why does the electric pole structure proposed have wider diameter at the top? Can you share the design of the top of the pole ? Can it be extended by adding another section by bolting, welding or any other method? If so, what extra voltage can be added to the line?
11. what is the proposed power consumption of 95054 zip code for the next 5, 10 and 15 years in the master plan ?
Reference #3
Page 174- Section 5.21- Corona and induced current effect:
Personal observation#3

The railway line's proximity to the proposed high transmission lines is very concerning. The centerline distance from proposed lines to railway line is aproximately 50 feet per google maps with some margin for error. As per the report there are no Corona rings proposed for the 115KV lines. There seems to be negligence in design in consideration of the hazards posed by these high voltage lines as Corona effect can transfer current to railway lines. All the residents are at a high risk of accidental hazards given the proximity of the railway line, this project is adding on to the hazards. This section is only stating information about what Corona effect is, as may be required by law, which by the way is again a copy paste from an old report. The only concern discussed in more depth is the audible noise level. The concerns are presented to imply that this is not significant by stating that 115KV lines pose less than significant risk**.**

Reference #4: Post meeting material from March 19th 2024 @https://santaclara.legistar.com/LegislationDetail.aspx?ID=6582415&GUID=E6E14646-3CF7-4D15-BB98-F18580696012&Options=&Search=

Personal observation#4: At surface level, it looks like Option #A was selected only based on Cost perspective, without any consideration to human health, young children, property values, Corona effect, long term sustainability perspective or any other factors. While its important to understand the results of CEQA study, its extremely critical to understand the negative impact of EMF on the many young children living around the proposed transmission lines. Without extensive research and study on the impact to young children and adult heath, we should not be approving such an incomplete proposal.

Page 6 of this document stated that the preferred route A cost of construction is $9.5 million. In discussions with several real estate agents in the region, I have unanimously found all to agree that the real estate values of residences in close proximity to power lines goes down. Its hard to find potential buyers and most folks refrain from buying a house too close to high power transmission lines. There are 1000 plus residences in the area affected by this project. Even if we were to make very rough assumptions, and assume minimal cost reduction in property values and take an average loss of $100,000 per property in the current year, that goes to $100,000,000 of loss of equity to the public. This is not even accounting the businesses affected by this project. This long explanation was to raise a point that if the selection of route A was saving money to the city, this is costing a huge financial loss to the public, which is not acceptable. This decrease in property values will also directly impact the tax collection by the Santa Clara Assessor and result in lower tax revenue coming into the city of Santa Clara.

Reference #5 : Page 49 of report- Figure 5.1-2. Wall separating residences and Lafayette Street.

Personal observation#5: *The picture is taken conveniently from the other side of the railway line which is actually Kingsbury street, inside a private community and not Lafayette street. This is further away from the proposed SVP lines. This is very misleading; see snapshots taken from Google maps below*

And this is what is included on the report:

The Mission Garden Townhome community has no walls as such and the main entry to residences face the road directly and are the most impacted. There are several other single family homes on Lafayette street with the same impact, having an entryway directly on the street. This and including other citations of reusing sections of older reports, is all in all absolutely unacceptable and instills distrust. This further shows incompetency of the agency/ agencies preparing this report.

Conclusion: *This project's initial study needs to expand beyond CEQA for approval from the public. The limited scope of CEQA has failed to address the following concerns we have:*

- *Health hazards due to EMF levels.- This is by far the gravest concern and CEQA is clearly not qualified to study that.*
- *Reduced property values- several references provided below.*
- *Loss of Aesthetic appeal for potential real estate buyers/ new and current businesses.*
- *Increase in audible noise levels during and post construction, which is already high in the area with presence of railway line and air traffic route.*
- *Increased fire hazard/ risk of other accidents.*
- *Induced current on railway lines with close proximity/ corona effect- CEQA report did not clearly address this for a 115KV line.*
- *Economic effect on the community from small to larger scale based on all of the above.*

We demand further investigation and revisit other routes or proposals to resolve the power needs of the city. We have to ensure our and our kids' health is not at stake in the name of development and infrastructure and are not in agreement for this project to move forward. ***We cannot approve this to***

move forward as of now given the lack of study and absence of a satisfactory solution/ mitigation provided in favor/ assurance to public health.

Additional References:
Research on effects of EMF on humans:

1. ***https://www.ncbi.nlm.nih.gov/pmc/articles/PMC6025786/***

This research reinforces the concerns of EMF exposure effect on human health.

2. ***https://www.epa.gov/radtown/electric-and-magnetic-fields-power-lines***

This resource suggests taking precautions and keeping distance or limiting exposure. Residents would no longer have either of these two options per the current proposals if they are living there 24-7.

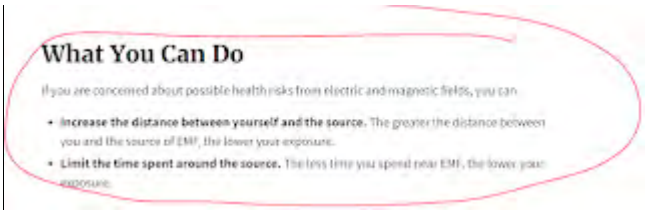

3. ***https://www.fastexpert.com/blog/should-i-buy-a-house-near-power-lines/***

These are points of view from a real estate expert who clearly states that property value declines proportionately to the distance of the property from high tension lines. People have apprehensions whether or not research clearly defines the risk. Potential buyers might have low priority for a property too close to a high tension power line.

4. ***https://orchard.com/blog/posts/power-lines-and-property-value***

Another research on real estate values lowered due to high tension power lines proximity.

Thanks & Regards
Paddy Subbian
Mission Gardens Community
Santa Clara, CA 95054

Email: NRS-KRS 115 kV T-Line

From: Anjana Batchu <batchuanjana@gmail.com>
Sent: Friday, August 30, 2024 2:37 PM
To: NRS-KRS Project; mayorandcouncil@santaclaraca.gov; info@silixonvalleypower.com; planningcommission@santaclara.gov; manager@santaclara.gov; ajackman@santaclara.gov
Subject: Concerns Regarding Upcoming High Power Electric Wire Poles in Our Community for the upcoming SVP project connecting the Northern Receiving Station NRS to Kifer receiving station (KRS)- NRS-KRS 115kV Transmission Line Project

Subject: **Concerns Regarding Upcoming High Power Electric Wire Poles in Our Community for the upcoming SVP project connecting the Northern Receiving Station NRS to Kifer receiving station (KRS)- *NRS-KRS 115kV Transmission Line Project***

To Whomsoever it may concern,

We are residents of Santa Clara that will be negatively impacted by the "NRS-KRS 115kV Transmission Line Project". We have collectively reviewed the draft Initial Study/ Mitigated Negative declaration for "NRS-KRS 115kV Transmission Line Project" from July 2024. After reviewing this report and also attending the virtual and in person meetings, here are some references to emphasize our various concerns.

Reference #1 : CEQA's reporting includes these State reviewing agencies: California Air Resources Board (ARB), California Department of Fish and Wildlife, Bay Delta Region 3 (CDFW), California Department of Forestry and Fire Protection (CAL FIRE), California Department of Parks and Recreation, California Department of Toxic Substances Control (DTSC), California Department of Transportation, District 4 (DOT), California Department of Transportation, Division of Aeronautics (DOT), California Department of Transportation, Division of Transportation Planning (DOT), California Department of Water Resources (DWR), California Energy Commission, California Highway Patrol (CHP), California Native American Heritage Commission (NAHC), California Natural Resources Agency, California Public Utilities Commission (CPUC), California Regional Water Quality Control Board, San Francisco Bay Region 2 (RWQCB), Office of Historic Preservation, State Water Resources Control Board, Division of Drinking Water.

Personal observation#1 : *None of these agencies has any association with human health. CEQA reporting is not qualified enough to force the public to compromise on health concerns. Other agencies need to be involved to review this proposal, that are qualified to study the effect on " humans", not just wildlife and vegetation, or " environment. The checklist is completely devoid of our gravest humanitarian concerns. It is quite shocking that the project has not included any study to understand the potential impact of EMF waves on human lives, given that the transmission lines are potentially less than 60 feet from the closest dwellings. The city of Santa Clara needs to step in and have third party/ independent studies completed in favor of human health.*

Reference #2: Page 41 of report- Section 4.15. Electric and Magnetic Fields summary.

Personal observation#2 : *This consideration was completely absent earlier. Only after the residents raised their voices, this section was added. To our greatest disappointment, this section is copied over from an older report on the "South Loop Reconfiguration Project" from 2020. One would have expected that a new study would have been conducted for a project this size. The lack of due diligence and ignorance towards the specifics of this project are apparent and not acceptable. In fact we have found several sections of this older report as being reused across the entire report.*

The EMP map shared during the in person meeting had several flaws and we would like to question the viability of the study that was completed. What time of the day was the study completed and on what models were the values based on since these were done on assumption for the EMF values that would be there once the project is complete. Since we have seen the several sections of the report redundantly copied over from other reports, we would like a more detailed analysis of this report.

Regarding EMF concerns for human health, there are plenty of scientific studies that do indicate the grave concern on human health with EMF exposures and we cannot ignore this aspect. Here is a reference to an article and there are plenty of articles listed here under references:

https://psc.wi.gov/Documents/Brochures/EMF.pdf

There are not enough references listed in the draft report provided to us, and the explanation provided seems to be conveniently using studies that prove otherwise. This needs more investigation and references. The solution provided as raising the height of the poles and increasing the distance is non-existent. It was confirmed during the in person meeting that the design will not be altered and the height was already designed as required according to the SVP team present there. It seems that the preparers of this report did not even read the report after copying pasting from the old report as evident in the list of proposed solutions is not applicable here.

The live presentation on August 22nd showed the comparison of EMF values of household objects as a means to show that everyday household items carry a similar range of mG(milli Gauss) units. This comparison was inherently flawed since it mentioned that the household devices were producing those level at 1 feet while those indicated for 115KVf lines were at 60 feet. further these household devices do not operate 24X7 similar to the transmission lines.

There were a lot of citations of reports showcasing that no clear proof of EMF to human health exists but we would like to also point out certain states like Connecticut Department of Public Health have cited reports that have shown an increased incidence of childhood leukemia(Blood cancer) at avg exposure of only 3 mG. Also they have called out that some utility workers exposed to high levels of emf have increase risks of Lur Gehrig's disease.

They also call out that most impacts of EMF from high voltage lines dissipate at ~300 feet.

These are available on Page 2 & Page 3 of this report: https://portal.ct.gov/-/media/departments-and-agencies/dph/dph/environmental_health/eoha/pdf/emffactsheet2008pdf.pdf

This report has citations from WHO , National Institute of Environmental Health Sciences and California Department of Health Services.

https://www.niehs.nih.gov/sites/default/files/health/materials/electric_and_magnetic_fields_associated_with_the_use_of_electric_power_questions_and_answers_english_508.pdf

Some other questions around the EMF study map shared during presentation on Aug 22 2024:

1. Have you conducted an existing EMF study to identify the current value of the community ?

2. Are your emf study values based on the cumulative, or interference of existing emf and potential emf.

3. Emf value was calculated based on existing studies. What was the delta between mathematical modeling and actual values (from existing structures).

4. What is the delta between underground and overhead structures' emf values?

5. Can you provide the same for Route options B and C?

6. What happens when electrification of rail lines happens- as this is already planned for the future? Have you potentially considered the cumulative EMF effect in coexistence of the high power lines and with railway lines' electrification? Will the EMF values not be much higher then?

7. Can you share the mathematical modeling maps of Emf for 115k, 230k and the next two higher values of the power line ?

8. Can you share Emf maps from existing structures of 115k, 230 k and the next 2 higher values of the power line?

9. Please share any emf related information that you have especially if it contains assumptions for any calculations so we can understand the effects of current project and future projects.

10. Why does the electric pole structure proposed have wider diameter at the top? Can you share the design of the top of the pole ? Can it be extended by adding another section by bolting, welding or any other method? If so, what extra voltage can be added to the line?

11. what is the proposed power consumption of 95054 zip code for the next 5, 10 and 15 years in the master plan ?

Reference #3

Page 174- Section 5.21- Corona and induced current effect:

Personal observation#3

The railway line's proximity to the proposed high transmission lines is very concerning. The centerline distance from proposed lines to railway line is aproximately 50 feet per google maps with some margin for error. As per the report there are no Corona rings proposed for the 115KV lines. There seems to be negligence in design in consideration of the hazards posed by these high voltage lines as Corona effect can transfer current to railway lines. All the residents are at a high risk of accidental hazards given the proximity of the railway line, this project is adding on to the hazards. This section is only stating information about what Corona effect is, as may be required by law, which by the way is again a copy paste from an old report. The only concern discussed in more depth is the audible noise level. The concerns are presented to imply that this is not significant by stating that 115KV lines pose less than significant risk**.**

Reference #4: Post meeting material from March 19th 2024
@https://santaclara.legistar.com/LegislationDetail.aspx?ID=6582415&GUID=E6E14646-3CF7-4D15-BB98-F18580696012&Options=&Search=

Personal observation#4: At surface level, it looks like Option #A was selected only based on Cost perspective, without any consideration to human health, young children, property values, Corona effect, long term sustainability perspective or any other factors. While its important to understand the results of CEQA study, its extremely critical to understand the negative impact of EMF on the many young children living around the proposed transmission lines. Without extensive research and study on the impact to young children and adult heath, we should not be approving such an incomplete proposal.

Page 6 of this document stated that the preferred route A cost of construction is $9.5 million. In discussions with several real estate agents in the region, I have unanimously found all to agree that the real estate values of residences in close proximity to power lines goes down. Its hard to find potential buyers and most folks refrain from buying a house too close to high power transmission lines. There are 1000 plus residences in the area affected by this project. Even if we were to make very rough assumptions, and assume minimal cost reduction in property values and take an average loss of

$100,000 per property in the current year, that goes to $100,000,000 of loss of equity to the public. This is not even accounting the businesses affected by this project. This long explanation was to raise a point that if the selection of route A was saving money to the city, this is costing a huge financial loss to the public, which is not acceptable. This decrease in property values will also directly impact the tax collection by the Santa Clara Assessor and result in lower tax revenue coming into the city of Santa Clara.

Reference #5 : Page 49 of report- Figure 5.1-2. Wall separating residences and Lafayette Street.

Personal observation#5: *The picture is taken conveniently from the other side of the railway line which is actually Kingsbury street, inside a private community and not Lafayette street. This is further away from the proposed SVP lines. This is very misleading; see snapshots taken from Google maps below*

-

And this is what is included on the report:

The Mission Garden Townhome community has no walls as such and the main entry to residences face the road directly and are the most impacted. There are several other single family homes on Lafayette street with the same impact, having an entryway directly on the street. This and including other citations of reusing sections of older reports, is all in all absolutely unacceptable and instills distrust. This further shows incompetency of the agency/ agencies preparing this report.

Conclusion: *This project's initial study needs to expand beyond CEQA for approval from the public. The limited scope of CEQA has failed to address the following concerns we have:*

- *Health hazards due to EMF levels.- This is by far the gravest concern and CEQA is clearly not qualified to study that.*
- *Reduced property values- several references provided below.*
- *Loss of Aesthetic appeal for potential real estate buyers/ new and current businesses.*
- *Increase in audible noise levels during and post construction, which is already high in the area with presence of railway line and air traffic route.*
- *Increased fire hazard/ risk of other accidents.*
- *Induced current on railway lines with close proximity/ corona effect- CEQA report did not clearly address this for a 115KV line.*
- *Economic effect on the community from small to larger scale based on all of the above.*

*We demand further investigation and revisit other routes or proposals to resolve the power needs of the city. We have to ensure our and our kids' health is not at stake in the name of development and infrastructure and are not in agreement for this project to move forward**. We cannot approve this to move forward as of now given the lack of study and absence of a satisfactory solution/ mitigation provided in favor/ assurance to public health.***

Additional References:

Research on effects of EMF on humans:

1. ***https://www.ncbi.nlm.nih.gov/pmc/articles/PMC6025786/***

This research reinforces the concerns of EMF exposure effect on human health.

2. ***https://www.epa.gov/radtown/electric-and-magnetic-fields-power-lines***

This resource suggests taking precautions and keeping distance or limiting exposure. Residents would no longer have either of these two options per the current proposals if they are living there 24-7.

3. ***https://www.fastexpert.com/blog/should-i-buy-a-house-near-power-lines/***

These are points of view from a real estate expert who clearly states that property value declines proportionately to the distance of the property from high tension lines. People have apprehensions whether or not research clearly defines the risk. Potential buyers might have low priority for a property too close to a high tension power line.

4. ***https://orchard.com/blog/posts/power-lines-and-property-value***

Another research on real estate values lowered due to high tension power lines proximity.

What You Can Do

If you are concerned about possible health risks from electric and magnetic fields, you can:

- **Increase the distance between yourself and the source.** The greater the distance between you and the source of EMF, the lower your exposure.
- **Limit the time spent around the source.** The less time you spend near EMF, the lower your exposure.

Figure 5.1-2. Wall Separating Residences and Lafayette Street

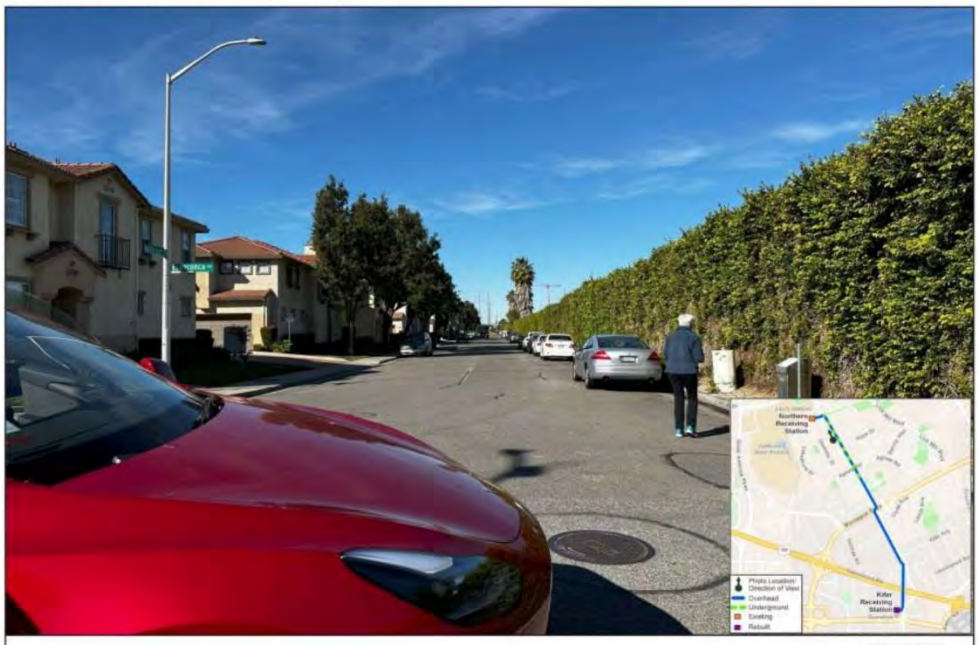

Figure 5.1-2

Wall Separating Residences and Lafayette Street

Email: NRS-KRS 115 kV T-Line

From: Anjana Batchu <anjubatchu@gmail.com>
Sent: Friday, August 30, 2024 2:36 PM
To: NRS-KRS Project; mayorandcouncil@santaclaraca.gov; info@silixonvalleypower.com; planningcommission@santaclara.gov; manager@santaclara.gov; ajackman@santaclara.gov
Subject: Concerns Regarding Upcoming High Power Electric Wire Poles in Our Community for the upcoming SVP project connecting the Northern Receiving Station NRS to Kifer receiving station (KRS)- NRS-KRS 115kV Transmission Line Project

To Whomsoever it may concern,

We are residents of Santa Clara that will be negatively impacted by the "NRS-KRS 115kV Transmission Line Project". We have collectively reviewed the draft Initial Study/ Mitigated Negative declaration for "NRS-KRS 115kV Transmission Line Project" from July 2024. After reviewing this report and also attending the virtual and in person meetings, here are some references to emphasize our various concerns.

Reference #1 : CEQA's reporting includes these State reviewing agencies: California Air Resources Board (ARB), California Department of Fish and Wildlife, Bay Delta Region 3 (CDFW), California Department of Forestry and Fire Protection (CAL FIRE), California Department of Parks and Recreation, California Department of Toxic Substances Control (DTSC), California Department of Transportation, District 4 (DOT), California Department of Transportation, Division of Aeronautics (DOT), California Department of Transportation, Division of Transportation Planning (DOT), California Department of Water Resources (DWR), California Energy Commission, California Highway Patrol (CHP), California Native American Heritage Commission (NAHC), California Natural Resources Agency, California Public Utilities Commission (CPUC), California Regional Water Quality Control Board, San Francisco Bay Region 2 (RWQCB), Office of Historic Preservation, State Water Resources Control Board, Division of Drinking Water.

Personal observation#1 : *None of these agencies has any association with human health. CEQA reporting is not qualified enough to force the public to compromise on health concerns. Other agencies need to be involved to review this proposal, that are qualified to study the effect on " humans", not just wildlife and vegetation, or " environment. The checklist is completely devoid of our gravest humanitarian concerns. It is quite shocking that the project has not included any study to understand the potential impact of EMF waves on human lives, given that the transmission lines are potentially less than 60 feet from the closest dwellings. The city of Santa Clara needs to step in and have third party/ independent studies completed in favor of human health.*

Reference #2: Page 41 of report- Section 4.15. Electric and Magnetic Fields summary.

Personal observation#2 : *This consideration was completely absent earlier. Only after the residents raised their voices, this section was added. To our greatest disappointment, this section is copied over from an older report on the "South Loop Reconfiguration Project" from 2020. One would have expected that a new study would have been conducted for a project this size. The lack of due diligence and ignorance towards the specifics of this project are apparent and not acceptable. In fact we have found several sections of this older report as being reused across the entire report.*

The EMP map shared during the in person meeting had several flaws and we would like to question the viability of the study that was completed. What time of the day was the study completed and on what models were the values based on since these were done on assumption for the EMF values that would

be there once the project is complete. Since we have seen the several sections of the report redundantly copied over from other reports, we would like a more detailed analysis of this report.

Regarding EMF concerns for human health, there are plenty of scientific studies that do indicate the grave concern on human health with EMF exposures and we cannot ignore this aspect. Here is a reference to an article and there are plenty of articles listed here under references:

https://psc.wi.gov/Documents/Brochures/EMF.pdf

There are not enough references listed in the draft report provided to us, and the explanation provided seems to be conveniently using studies that prove otherwise. This needs more investigation and references. The solution provided as raising the height of the poles and increasing the distance is non-existent. It was confirmed during the in person meeting that the design will not be altered and the height was already designed as required according to the SVP team present there. It seems that the preparers of this report did not even read the report after copying pasting from the old report as evident in the list of proposed solutions is not applicable here.

The live presentation on August 22nd showed the comparison of EMF values of household objects as a means to show that everyday household items carry a similar range of mG(milli Gauss) units. This comparison was inherently flawed since it mentioned that the household devices were producing those level at 1 feet while those indicated for 115KVf lines were at 60 feet. further these household devices do not operate 24X7 similar to the transmission lines.

There were a lot of citations of reports showcasing that no clear proof of EMF to human health exists but we would like to also point out certain states like Connecticut Department of Public Health have cited reports that have shown an increased incidence of childhood leukemia(Blood cancer) at avg exposure of only 3 mG. Also they have called out that some utility workers exposed to high levels of emf have increase risks of Lur Gehrig's disease.

They also call out that most impacts of EMF from high voltage lines dissipate at ~300 feet.

These are available on Page 2 & Page 3 of this report: https://portal.ct.gov/-/media/departments-and-agencies/dph/dph/environmental_health/eoha/pdf/emffactsheet2008pdf.pdf

This report has citations from WHO , National Institute of Environmental Health Sciences and California Department of Health Services.

https://www.niehs.nih.gov/sites/default/files/health/materials/electric_and_magnetic_fields_associated_with_the_use_of_electric_power_questions_and_answers_english_508.pdf

Some other questions around the EMF study map shared during presentation on Aug 22 2024:

1. Have you conducted an existing EMF study to identify the current value of the community ?

2. Are your emf study values based on the cumulative, or interference of existing emf and potential emf.

3. Emf value was calculated based on existing studies. What was the delta between mathematical modeling and actual values (from existing structures).

4. What is the delta between underground and overhead structures' emf values?

5. Can you provide the same for Route options B and C?

6. What happens when electrification of rail lines happens- as this is already planned for the future? Have you potentially considered the cumulative EMF effect in coexistence of the high power lines and with railway lines' electrification? Will the EMF values not be much higher then?

7. Can you share the mathematical modeling maps of Emf for 115k, 230k and the next two higher values of the power line ?

8. Can you share Emf maps from existing structures of 115k, 230 k and the next 2 higher values of the power line?

9. Please share any emf related information that you have especially if it contains assumptions for any calculations so we can understand the effects of current project and future projects.

10. Why does the electric pole structure proposed have wider diameter at the top? Can you share the design of the top of the pole ? Can it be extended by adding another section by bolting, welding or any other method? If so, what extra voltage can be added to the line?

11. what is the proposed power consumption of 95054 zip code for the next 5, 10 and 15 years in the master plan ?

Reference #3

Page 174- Section 5.21- Corona and induced current effect:

Personal observation#3

The railway line's proximity to the proposed high transmission lines is very concerning. The centerline distance from proposed lines to railway line is aproximately 50 feet per google maps with some margin for error. As per the report there are no Corona rings proposed for the 115KV lines. There seems to be negligence in design in consideration of the hazards posed by these high voltage lines as Corona effect can transfer current to railway lines. All the residents are at a high risk of accidental hazards given the proximity of the railway line, this project is adding on to the hazards. This section is only stating information about what Corona effect is, as may be required by law, which by the way is again a copy paste from an old report. The only concern discussed in more depth is the audible noise level. The concerns are presented to imply that this is not significant by stating that 115KV lines pose less than significant risk**.**

Reference #4: Post meeting material from March 19th 2024
@https://santaclara.legistar.com/LegislationDetail.aspx?ID=6582415&GUID=E6E14646-3CF7-4D15-BB98-F18580696012&Options=&Search=

Personal observation#4: At surface level, it looks like Option #A was selected only based on Cost perspective, without any consideration to human health, young children, property values, Corona effect, long term sustainability perspective or any other factors. While its important to understand the results of CEQA study, its extremely critical to understand the negative impact of EMF on the many young children living around the proposed transmission lines. Without extensive research and study on the impact to young children and adult heath, we should not be approving such an incomplete proposal.

Page 6 of this document stated that the preferred route A cost of construction is $9.5 million. In discussions with several real estate agents in the region, I have unanimously found all to agree that the real estate values of residences in close proximity to power lines goes down. Its hard to find potential buyers and most folks refrain from buying a house too close to high power transmission lines. There are 1000 plus residences in the area affected by this project. Even if we were to make very rough assumptions, and assume minimal cost reduction in property values and take an average loss of $100,000 per property in the current year, that goes to $100,000,000 of loss of equity to the public. This is not even accounting the businesses affected by this project. This long explanation was to raise a point that if the selection of route A was saving money to the city, this is costing a huge financial loss to the

public, which is not acceptable. This decrease in property values will also directly impact the tax collection by the Santa Clara Assessor and result in lower tax revenue coming into the city of Santa Clara.

Reference #5 : Page 49 of report- Figure 5.1-2. Wall separating residences and Lafayette Street.

Personal observation#5: *The picture is taken conveniently from the other side of the railway line which is actually Kingsbury street, inside a private community and not Lafayette street. This is further away from the proposed SVP lines. This is very misleading; see snapshots taken from Google maps below*

-

And this is what is included on the report:

The Mission Garden Townhome community has no walls as such and the main entry to residences face the road directly and are the most impacted. There are several other single family homes on Lafayette street with the same impact, having an entryway directly on the street. This and including other citations of reusing sections of older reports, is all in all absolutely unacceptable and instills distrust. This further shows incompetency of the agency/ agencies preparing this report.

Conclusion: *This project's initial study needs to expand beyond CEQA for approval from the public. The limited scope of CEQA has failed to address the following concerns we have:*

- *Health hazards due to EMF levels.- This is by far the gravest concern and CEQA is clearly not qualified to study that.*
- *Reduced property values- several references provided below.*
- *Loss of Aesthetic appeal for potential real estate buyers/ new and current businesses.*
- *Increase in audible noise levels during and post construction, which is already high in the area with presence of railway line and air traffic route.*
- *Increased fire hazard/ risk of other accidents.*
- *Induced current on railway lines with close proximity/ corona effect- CEQA report did not clearly address this for a 115KV line.*
- *Economic effect on the community from small to larger scale based on all of the above.*

*We demand further investigation and revisit other routes or proposals to resolve the power needs of the city. We have to ensure our and our kids' health is not at stake in the name of development and infrastructure and are not in agreement for this project to move forward**. We cannot approve this to move forward as of now given the lack of study and absence of a satisfactory solution/ mitigation provided in favor/ assurance to public health.***

Additional References:

Research on effects of EMF on humans:

1. ***https://www.ncbi.nlm.nih.gov/pmc/articles/PMC6025786/***

This research reinforces the concerns of EMF exposure effect on human health.

2. ***https://www.epa.gov/radtown/electric-and-magnetic-fields-power-lines***

This resource suggests taking precautions and keeping distance or limiting exposure. Residents would no longer have either of these two options per the current proposals if they are living there 24-7.

3. ***https://www.fastexpert.com/blog/should-i-buy-a-house-near-power-lines/***

These are points of view from a real estate expert who clearly states that property value declines proportionately to the distance of the property from high tension lines. People have apprehensions whether or not research clearly defines the risk. Potential buyers might have low priority for a property too close to a high tension power line.

4. ***https://orchard.com/blog/posts/power-lines-and-property-value***

Another research on real estate values lowered due to high tension power lines proximity.

What You Can Do

If you are concerned about possible health risks from electric and magnetic fields, you can:

- **Increase the distance between yourself and the source.** The greater the distance between you and the source of EMF, the lower your exposure.
- **Limit the time spent around the source.** The less time you spend near EMF, the lower your exposure.

Figure 5.1-2. Wall Separating Residences and Lafayette Street

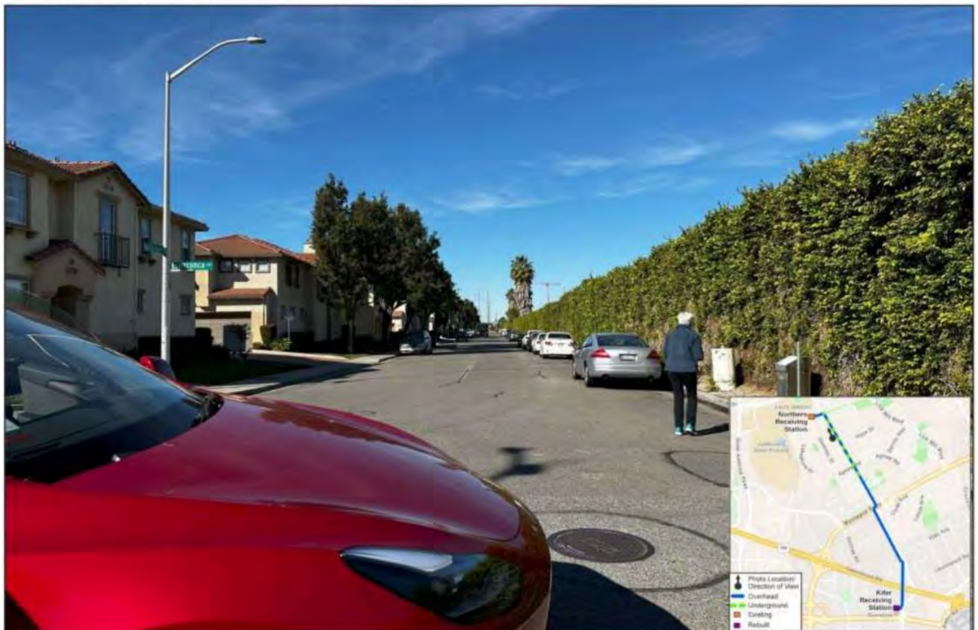

Figure 5.1-2

Wall Separating Residences and Lafayette Street

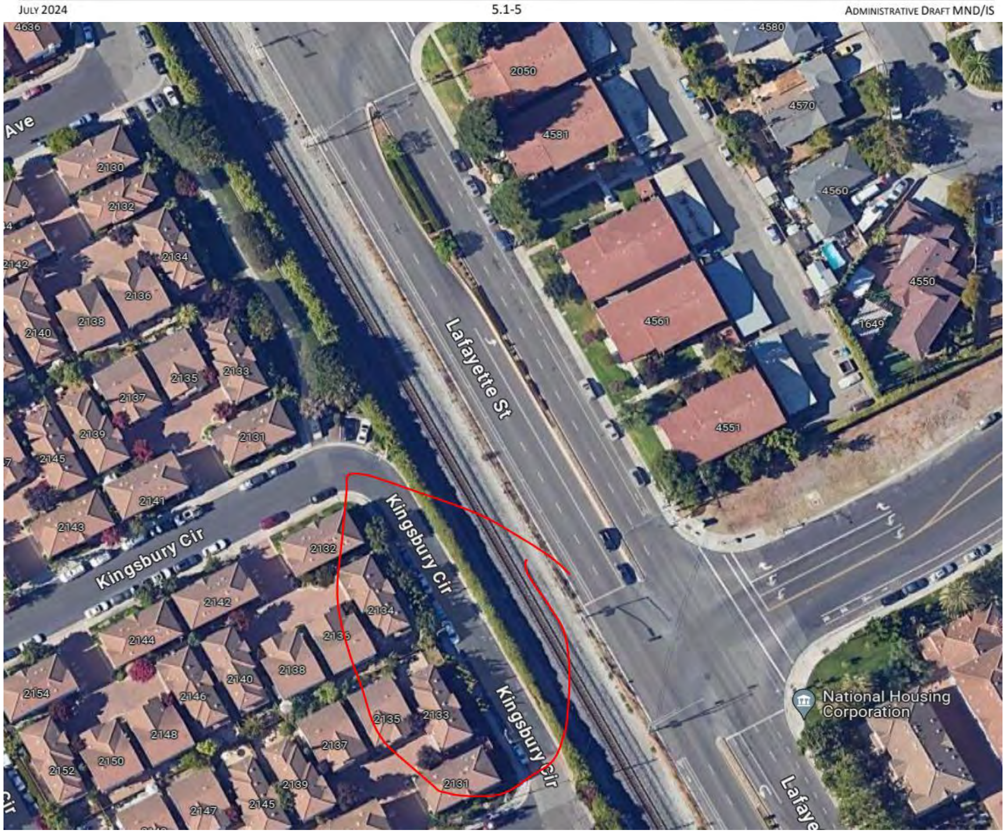

Email: NRS-KRS 115 kV T-Line

From: Amit Chandak <amitchandak10@gmail.com>
Sent: Friday, August 30, 2024 2:35 PM
To: NRS-KRS Project; mayorandcouncil@santaclaraca.gov; info@siliconvalleypower.com; planningcommission@santaclaraca.gov; manager@santaclaraca.gov; AJackman@santaclaraca.gov
Subject: Concerns Regarding Upcoming High Power Electric Wire Poles in Our Community for the upcoming SVP project connecting the Northern Receiving Station NRS to Kifer receiving station (KRS)- NRS-KRS 115kV Transmission Line Project

To Whomsoever it may concern,
We are residents of Santa Clara that will be negatively impacted by the "NRS-KRS 115kV Transmission Line Project". We have collectively reviewed the draft Initial Study/ Mitigated Negative declaration for "NRS-KRS 115kV Transmission Line Project" from July 2024. After reviewing this report and also attending the virtual and in person meetings, here are some references to emphasize our various concerns.

Reference #1 : CEQA's reporting includes these State reviewing agencies: California Air Resources Board (ARB), California Department of Fish and Wildlife, Bay Delta Region 3 (CDFW), California Department of Forestry and Fire Protection (CAL FIRE), California Department of Parks and Recreation, California Department of Toxic Substances Control (DTSC), California Department of Transportation, District 4 (DOT), California Department of Transportation, Division of Aeronautics (DOT), California Department of Transportation, Division of Transportation Planning (DOT), California Department of Water Resources (DWR), California Energy Commission, California Highway Patrol (CHP), California Native American Heritage Commission (NAHC), California Natural Resources Agency, California Public Utilities Commission (CPUC), California Regional Water Quality Control Board, San Francisco Bay Region 2 (RWQCB), Office of Historic Preservation, State Water Resources Control Board, Division of Drinking Water.

Personal observation#1 : *None of these agencies has any association with human health. CEQA reporting is not qualified enough to force the public to compromise on health concerns. Other agencies need to be involved to review this proposal, that are qualified to study the effect on " humans", not just wildlife and vegetation, or " environment. The checklist is completely devoid of our gravest humanitarian concerns. It is quite shocking that the project has not included any study to understand the potential impact of EMF waves on human lives, given that the transmission lines are potentially less than 60 feet from the closest dwellings. The city of Santa Clara needs to step in and have third party/ independent studies completed in favor of human health.*

Reference #2: Page 41 of report- Section 4.15. Electric and Magnetic Fields summary.

Personal observation#2 : *This consideration was completely absent earlier. Only after the residents raised their voices, this section was added. To our greatest disappointment, this section is copied over from an older report on the "South Loop Reconfiguration Project" from 2020. One would have expected that a new study would have been conducted for a project this size. The lack of due diligence and ignorance towards the specifics of this project are apparent and not acceptable. In fact we have found several sections of this older report as being reused across the entire report.*

The EMP map shared during the in person meeting had several flaws and we would like to question the viability of the study that was completed. What time of the day was the study completed and on what models were the values based on since these were done on assumption for the EMF values that would be there once the project is complete. Since we have seen the several sections of the report redundantly copied over from other reports, we would like a more detailed analysis of this report.

Regarding EMF concerns for human health, there are plenty of scientific studies that do indicate the grave concern on human health with EMF exposures and we cannot ignore this aspect. Here is a reference to an article and there are plenty of articles listed here under references:

https://psc.wi.gov/Documents/Brochures/EMF.pdf

There are not enough references listed in the draft report provided to us, and the explanation provided seems to be conveniently using studies that prove otherwise. This needs more investigation and references. The solution provided as raising the height of the poles and increasing the distance is non-existent. It was confirmed during the in person meeting that the design will not be altered and the height was already designed as required according to the SVP team present there. It seems that the preparers of this report did not even read the report after copying pasting from the old report as evident in the list of proposed solutions is not applicable here.

The live presentation on August 22nd showed the comparison of EMF values of household objects as a means to show that everyday household items carry a similar range of mG(milli Gauss) units. This comparison was inherently flawed since it mentioned that the household devices were producing those level at 1 feet while those indicated for 115KVf lines were at 60 feet. further these household devices do not operate 24X7 similar to the transmission lines.

There were a lot of citations of reports showcasing that no clear proof of EMF to human health exists but we would like to also point out certain states like Connecticut Department of Public Health have cited reports that have shown an increased incidence of childhood leukemia(Blood cancer) at avg exposure of only 3 mG. Also they have called out that some utility workers exposed to high levels of emf have increase risks of Lur Gehrig's disease.

They also call out that most impacts of EMF from high voltage lines dissipate at ~300 feet.

These are available on Page 2 & Page 3 of this report: https://portal.ct.gov/-/media/departments-and-agencies/dph/dph/environmental_health/eoha/pdf/emffactsheet2008pdf.pdf

This report has citations from WHO , National Institute of Environmental Health Sciences and California Department of Health Services.

https://www.niehs.nih.gov/sites/default/files/health/materials/electric_and_magnetic_fields_associated_with_the_use_of_electric_power_questions_and_answers_english_508.pdf

Reference #3

Page 174- Section 5.21- Corona and induced current effect:

Personal observation#3

The railway line's proximity to the proposed high transmission lines is very concerning. The centerline distance from proposed lines to railway line is aproximately 50 feet per google maps with some margin for error. As per the report there are no Corona rings proposed for the 115KV lines. There seems to be negligence in design in consideration of the hazards posed by these high voltage lines as Corona effect can transfer current to railway lines. All the residents are at a high risk of accidental hazards given the proximity of the railway line, this project is adding on to the hazards. This section is only stating information about what Corona effect is, as may be required by law, which by the way is again a copy paste from an old report. The only concern discussed in more depth is the audible noise level. The concerns are presented to imply that this is not significant by stating that 115KV lines pose less than significant risk**.**

Reference #4: Post meeting material from March 19th 2024 @https://santaclara.legistar.com/LegislationDetail.aspx?ID=6582415&GUID=E6E14646-3CF7-4D15-BB98-F18580696012&Options=&Search=

Personal observation#4: At surface level, it looks like Option #A was selected only based on Cost perspective, without any consideration to human health, young children, property values, Corona effect, long term sustainability perspective or any other factors. While its important to understand the results of CEQA study, its extremely critical to understand the negative impact of EMF on the many young children living around the proposed transmission lines. Without extensive research and study on the impact to young children and adult heath, we should not be approving such an incomplete proposal.

Page 6 of this document stated that the preferred route A cost of construction is $9.5 million. In discussions with several real estate agents in the region, I have unanimously found all to agree that the real estate values of residences in close proximity to power lines goes down. Its hard to find potential buyers and most folks refrain from buying a house too close to high power transmission lines. There are 1000 plus residences in the area affected by this project. Even if we were to make very rough assumptions, and assume minimal cost reduction in property values and take an average loss of $100,000 per property in the current year, that goes to $100,000,000 of loss of equity to the public. This is not even accounting the businesses affected by this project. This long explanation was to raise a point that if the selection of route A was saving money to the city, this is costing a huge financial loss to the public, which is not acceptable. This decrease in property values will also directly impact the tax collection by the Santa Clara Assessor and result in lower tax revenue coming into the city of Santa Clara.

Reference #5 : Page 49 of report- Figure 5.1-2. Wall separating residences and Lafayette Street.

Personal observation#5: *The picture is taken conveniently from the other side of the railway line which is actually Kingsbury street, inside a private community and not Lafayette street. This is further away from the proposed SVP lines. This is very misleading; see snapshots taken from Google maps below*

And this is what is included on the report:

NRS-KRS 115kV Transmission Line Project 5.1. Aesthetics

Figure 5.1-2. Wall Separating Residences and Lafayette Street

Figure 5.1-2
Wall Separating Residences and Lafayette Street

July 2024 5.1-5 Administrative Draft MND/IS

The Mission Garden Townhome community has no walls as such and the main entry to residences face the road directly and are the most impacted. There are several other single family homes on Lafayette

street with the same impact, having an entryway directly on the street. This and including other citations of reusing sections of older reports, is all in all absolutely unacceptable and instills distrust. This further shows incompetency of the agency/ agencies preparing this report.

Conclusion: *This project's initial study needs to expand beyond CEQA for approval from the public. The limited scope of CEQA has failed to address the following concerns we have:*

- *Health hazards due to EMF levels.- This is by far the gravest concern and CEQA is clearly not qualified to study that.*
- *Reduced property values- several references provided below.*
- *Loss of Aesthetic appeal for potential real estate buyers/ new and current businesses.*
- *Increase in audible noise levels during and post construction, which is already high in the area with presence of railway line and air traffic route.*
- *Increased fire hazard/ risk of other accidents.*
- *Induced current on railway lines with close proximity/ corona effect- CEQA report did not clearly address this for a 115KV line.*
- *Economic effect on the community from small to larger scale based on all of the above.*

*We demand further investigation and revisit other routes or proposals to resolve the power needs of the city. We have to ensure our and our kids' health is not at stake in the name of development and infrastructure and are not in agreement for this project to move forward**. We cannot approve this to move forward as of now given the lack of study and absence of a satisfactory solution/ mitigation provided in favor/ assurance to public health.***

Thanks & Regards,
Kanupriya

Additional References:

Research on effects of EMF on humans:

1. ***https://www.ncbi.nlm.nih.gov/pmc/articles/PMC6025786/***

This research reinforces the concerns of EMF exposure effect on human health.

2. ***https://www.epa.gov/radtown/electric-and-magnetic-fields-power-lines***

This resource suggests taking precautions and keeping distance or limiting exposure. Residents would no longer have either of these two options per the current proposals if they are living there 24-7.

What You Can Do

If you are concerned about possible health risks from electric and magnetic fields, you can:

- **Increase the distance between yourself and the source.** The greater the distance between you and the source of EMF, the lower your exposure.
- **Limit the time spent around the source.** The less time you spend near EMF, the lower your exposure.

3. ***https://www.fastexpert.com/blog/should-i-buy-a-house-near-power-lines/***

These are points of view from a real estate expert who clearly states that property value declines proportionately to the distance of the property from high tension lines. People have apprehensions whether or not research clearly defines the risk. Potential buyers might have low priority for a property too close to a high tension power line.

4. https://orchard.com/blog/posts/power-lines-and-property-value

Another research on real estate values lowered due to high tension power lines proximity.

ReplyForward
Add reaction

Email: NRS-KRS 115 kV T-Line

From: Amit Chandak <amit.chandak@gmail.com>
Sent: Friday, August 30, 2024 2:33 PM
To: NRS-KRS Project; mayorandcouncil@santaclaraca.gov; info@siliconvalleypower.com; planningcommission@santaclaraca.gov; manager@santaclaraca.gov; AJackman@santaclaraca.gov
Subject: Concerns Regarding Upcoming High Power Electric Wire Poles in Our Community for the upcoming SVP project connecting the Northern Receiving Station NRS to Kifer receiving station (KRS)- NRS-KRS 115kV Transmission Line Project

To Whomsoever it may concern,
We are residents of Santa Clara that will be negatively impacted by the "NRS-KRS 115kV Transmission Line Project". We have collectively reviewed the draft Initial Study/ Mitigated Negative declaration for "NRS-KRS 115kV Transmission Line Project" from July 2024. After reviewing this report and also attending the virtual and in person meetings, here are some references to emphasize our various concerns.

Reference #1 : CEQA's reporting includes these State reviewing agencies: California Air Resources Board (ARB), California Department of Fish and Wildlife, Bay Delta Region 3 (CDFW), California Department of Forestry and Fire Protection (CAL FIRE), California Department of Parks and Recreation, California Department of Toxic Substances Control (DTSC), California Department of Transportation, District 4 (DOT), California Department of Transportation, Division of Aeronautics (DOT), California Department of Transportation, Division of Transportation Planning (DOT), California Department of Water Resources (DWR), California Energy Commission, California Highway Patrol (CHP), California Native American Heritage Commission (NAHC), California Natural Resources Agency, California Public Utilities Commission (CPUC), California Regional Water Quality Control Board, San Francisco Bay Region 2 (RWQCB), Office of Historic Preservation, State Water Resources Control Board, Division of Drinking Water.

Personal observation#1 : *None of these agencies has any association with human health. CEQA reporting is not qualified enough to force the public to compromise on health concerns. Other agencies need to be involved to review this proposal, that are qualified to study the effect on " humans", not just wildlife and vegetation, or " environment. The checklist is completely devoid of our gravest humanitarian concerns. It is quite shocking that the project has not included any study to understand the potential impact of EMF waves on human lives, given that the transmission lines are potentially less than 60 feet from the closest dwellings. The city of Santa Clara needs to step in and have third party/ independent studies completed in favor of human health.*

Reference #2: Page 41 of report- Section 4.15. Electric and Magnetic Fields summary.

Personal observation#2 : *This consideration was completely absent earlier. Only after the residents raised their voices, this section was added. To our greatest disappointment, this section is copied over from an older report on the "South Loop Reconfiguration Project" from 2020. One would have expected that a new study would have been conducted for a project this size. The lack of due diligence and ignorance towards the specifics of this project are apparent and not acceptable. In fact we have found several sections of this older report as being reused across the entire report.*

The EMP map shared during the in person meeting had several flaws and we would like to question the viability of the study that was completed. What time of the day was the study completed and on what models were the values based on since these were done on assumption for the EMF values that would be there once the project is complete. Since we have seen the several sections of the report redundantly copied over from other reports, we would like a more detailed analysis of this report.

Regarding EMF concerns for human health, there are plenty of scientific studies that do indicate the grave concern on human health with EMF exposures and we cannot ignore this aspect. Here is a reference to an article and there are plenty of articles listed here under references:

https://psc.wi.gov/Documents/Brochures/EMF.pdf

There are not enough references listed in the draft report provided to us, and the explanation provided seems to be conveniently using studies that prove otherwise. This needs more investigation and references. The solution provided as raising the height of the poles and increasing the distance is non-existent. It was confirmed during the in person meeting that the design will not be altered and the height was already designed as required according to the SVP team present there. It seems that the preparers of this report did not even read the report after copying pasting from the old report as evident in the list of proposed solutions is not applicable here.

The live presentation on August 22nd showed the comparison of EMF values of household objects as a means to show that everyday household items carry a similar range of mG(milli Gauss) units. This comparison was inherently flawed since it mentioned that the household devices were producing those level at 1 feet while those indicated for 115KVf lines were at 60 feet. further these household devices do not operate 24X7 similar to the transmission lines.

There were a lot of citations of reports showcasing that no clear proof of EMF to human health exists but we would like to also point out certain states like Connecticut Department of Public Health have cited reports that have shown an increased incidence of childhood leukemia(Blood cancer) at avg exposure of only 3 mG. Also they have called out that some utility workers exposed to high levels of emf have increase risks of Lur Gehrig's disease.

They also call out that most impacts of EMF from high voltage lines dissipate at ~300 feet.

These are available on Page 2 & Page 3 of this report: https://portal.ct.gov/-/media/departments-and-agencies/dph/dph/environmental_health/eoha/pdf/emffactsheet2008pdf.pdf

This report has citations from WHO , National Institute of Environmental Health Sciences and California Department of Health Services.

https://www.niehs.nih.gov/sites/default/files/health/materials/electric_and_magnetic_fields_associated_with_the_use_of_electric_power_questions_and_answers_english_508.pdf

Reference #3

Page 174- Section 5.21- Corona and induced current effect:

Personal observation#3

The railway line's proximity to the proposed high transmission lines is very concerning. The centerline distance from proposed lines to railway line is aproximately 50 feet per google maps with some margin for error. As per the report there are no Corona rings proposed for the 115KV lines. There seems to be negligence in design in consideration of the hazards posed by these high voltage lines as Corona effect can transfer current to railway lines. All the residents are at a high risk of accidental hazards given the proximity of the railway line, this project is adding on to the hazards. This section is only stating information about what Corona effect is, as may be required by law, which by the way is again a copy paste from an old report. The only concern discussed in more depth is the audible noise level. The concerns are presented to imply that this is not significant by stating that 115KV lines pose less than significant risk**.**

Reference #4: Post meeting material from March 19th 2024 @https://santaclara.legistar.com/LegislationDetail.aspx?ID=6582415&GUID=E6E14646-3CF7-4D15-BB98-F18580696012&Options=&Search=

Personal observation#4: At surface level, it looks like Option #A was selected only based on Cost perspective, without any consideration to human health, young children, property values, Corona effect, long term sustainability perspective or any other factors. While its important to understand the results of CEQA study, its extremely critical to understand the negative impact of EMF on the many young children living around the proposed transmission lines. Without extensive research and study on the impact to young children and adult heath, we should not be approving such an incomplete proposal.

Page 6 of this document stated that the preferred route A cost of construction is $9.5 million. In discussions with several real estate agents in the region, I have unanimously found all to agree that the real estate values of residences in close proximity to power lines goes down. Its hard to find potential buyers and most folks refrain from buying a house too close to high power transmission lines. There are 1000 plus residences in the area affected by this project. Even if we were to make very rough assumptions, and assume minimal cost reduction in property values and take an average loss of $100,000 per property in the current year, that goes to $100,000,000 of loss of equity to the public. This is not even accounting the businesses affected by this project. This long explanation was to raise a point that if the selection of route A was saving money to the city, this is costing a huge financial loss to the public, which is not acceptable. This decrease in property values will also directly impact the tax collection by the Santa Clara Assessor and result in lower tax revenue coming into the city of Santa Clara.

Reference #5 : Page 49 of report- Figure 5.1-2. Wall separating residences and Lafayette Street.

Personal observation#5: *The picture is taken conveniently from the other side of the railway line which is actually Kingsbury street, inside a private community and not Lafayette street. This is further away from the proposed SVP lines. This is very misleading; see snapshots taken from Google maps below*

And this is what is included on the report:

NRS-KRS 115kV Transmission Line Project 5.1. Aesthetics

Figure 5.1-2. Wall Separating Residences and Lafayette Street

Figure 5.1-2
Wall Separating Residences and Lafayette Street

July 2024 5.1-5 Administrative Draft MND/IS

The Mission Garden Townhome community has no walls as such and the main entry to residences face the road directly and are the most impacted. There are several other single family homes on Lafayette

street with the same impact, having an entryway directly on the street. This and including other citations of reusing sections of older reports, is all in all absolutely unacceptable and instills distrust. This further shows incompetency of the agency/ agencies preparing this report.

Conclusion: *This project's initial study needs to expand beyond CEQA for approval from the public. The limited scope of CEQA has failed to address the following concerns we have:*

- *Health hazards due to EMF levels.- This is by far the gravest concern and CEQA is clearly not qualified to study that.*
- *Reduced property values- several references provided below.*
- *Loss of Aesthetic appeal for potential real estate buyers/ new and current businesses.*
- *Increase in audible noise levels during and post construction, which is already high in the area with presence of railway line and air traffic route.*
- *Increased fire hazard/ risk of other accidents.*
- *Induced current on railway lines with close proximity/ corona effect- CEQA report did not clearly address this for a 115KV line.*
- *Economic effect on the community from small to larger scale based on all of the above.*

*We demand further investigation and revisit other routes or proposals to resolve the power needs of the city. We have to ensure our and our kids' health is not at stake in the name of development and infrastructure and are not in agreement for this project to move forward**. We cannot approve this to move forward as of now given the lack of study and absence of a satisfactory solution/ mitigation provided in favor/ assurance to public health.***

Thanks & Regards,
Kanupriya

Additional References:

Research on effects of EMF on humans:

1. ***https://www.ncbi.nlm.nih.gov/pmc/articles/PMC6025786/***

This research reinforces the concerns of EMF exposure effect on human health.

2. ***https://www.epa.gov/radtown/electric-and-magnetic-fields-power-lines***

This resource suggests taking precautions and keeping distance or limiting exposure. Residents would no longer have either of these two options per the current proposals if they are living there 24-7.

What You Can Do

If you are concerned about possible health risks from electric and magnetic fields, you can:

- **Increase the distance between yourself and the source.** The greater the distance between you and the source of EMF, the lower your exposure.
- **Limit the time spent around the source.** The less time you spend near EMF, the lower your exposure.

3. ***https://www.fastexpert.com/blog/should-i-buy-a-house-near-power-lines/***

These are points of view from a real estate expert who clearly states that property value declines proportionately to the distance of the property from high tension lines. People have

apprehensions whether or not research clearly defines the risk. Potential buyers might have low priority for a property too close to a high tension power line.

4. https://orchard.com/blog/posts/power-lines-and-property-value

Another research on real estate values lowered due to high tension power lines proximity.

Email: NRS-KRS 115 kV T-Line

From: Candida Bayross <candy.rufus@gmail.com>
Sent: Friday, August 30, 2024 12:50 PM
To: NRS-KRS Project; mayorandcouncil@santaclaraca.gov; info@siliconvalleypower.com; planningcommission@santaclaraca.gov; manager@santaclaraca.gov; AJackman@santaclaraca.gov
Subject: Concerns Regarding Upcoming High Power Electric Wire Poles in Our Community for the upcoming SVP project connecting the Northern Receiving Station NRS to Kifer receiving station (KRS) - NRS-KRS 115kV Transmission Line Project

To Whomsoever it may concern,

We are residents of Santa Clara that will be negatively impacted by the "NRS-KRS 115kV Transmission Line Project". We have collectively reviewed the draft Initial Study/ Mitigated Negative declaration for "NRS-KRS 115kV Transmission Line Project" from July 2024. After reviewing this report and also attending the virtual and in person meetings, here are some references to emphasize our various concerns.

Reference #1 : CEQA's reporting includes these State reviewing agencies: California Air Resources Board (ARB), California Department of Fish and Wildlife, Bay Delta Region 3 (CDFW), California Department of Forestry and Fire Protection (CAL FIRE), California Department of Parks and Recreation, California Department of Toxic Substances Control (DTSC), California Department of Transportation, District 4 (DOT), California Department of Transportation, Division of Aeronautics (DOT), California Department of Transportation, Division of Transportation Planning (DOT), California Department of Water Resources (DWR), California Energy Commission, California Highway Patrol (CHP), California Native American Heritage Commission (NAHC), California Natural Resources Agency, California Public Utilities Commission (CPUC), California Regional Water Quality Control Board, San Francisco Bay Region 2 (RWQCB), Office of Historic Preservation, State Water Resources Control Board, Division of Drinking Water.

Personal observation#1 : *None of these agencies has any association with human health. CEQA reporting is not qualified enough to force the public to compromise on health concerns. Other agencies need to be involved to review this proposal, that are qualified to study the effect on " humans", not just wildlife and vegetation, or " environment. The checklist is completely devoid of our gravest humanitarian concerns. It is quite shocking that the project has not included any study to understand the potential impact of EMF waves on human lives, given that the transmission lines are potentially less than 60 feet from the closest dwellings. The city of Santa Clara needs to step in and have third party/ independent studies completed in favor of human health.*

Reference #2: Page 41 of report- Section 4.15. Electric and Magnetic Fields summary.

Personal observation#2 : *This consideration was completely absent earlier. Only after the residents raised their voices, this section was added. To our greatest disappointment, this section is copied over from an older report on the "South Loop Reconfiguration Project" from 2020. One would have expected that a new study would have been conducted for a project this size. The lack of due diligence and ignorance towards the specifics of this project are apparent and not acceptable. In fact we have found several sections of this older report as being reused across the entire report.*

The EMP map shared during the in person meeting had several flaws and we would like to question the viability of the study that was completed. What time of the day was the study completed and on what models were the values based on since these were done on assumption for the EMF values that would

be there once the project is complete. Since we have seen the several sections of the report redundantly copied over from other reports, we would like a more detailed analysis of this report.

Regarding EMF concerns for human health, there are plenty of scientific studies that do indicate the grave concern on human health with EMF exposures and we cannot ignore this aspect. Here is a reference to an article and there are plenty of articles listed here under references:

https://psc.wi.gov/Documents/Brochures/EMF.pdf

There are not enough references listed in the draft report provided to us, and the explanation provided seems to be conveniently using studies that prove otherwise. This needs more investigation and references. The solution provided as raising the height of the poles and increasing the distance is non-existent. It was confirmed during the in person meeting that the design will not be altered and the height was already designed as required according to the SVP team present there. It seems that the preparers of this report did not even read the report after copying pasting from the old report as evident in the list of proposed solutions is not applicable here.

The live presentation on August 22nd showed the comparison of EMF values of household objects as a means to show that everyday household items carry a similar range of mG(milli Gauss) units. This comparison was inherently flawed since it mentioned that the household devices were producing those level at 1 feet while those indicated for 115KVf lines were at 60 feet. further these household devices do not operate 24X7 similar to the transmission lines.

There were a lot of citations of reports showcasing that no clear proof of EMF to human health exists but we would like to also point out certain states like Connecticut Department of Public Health have cited reports that have shown an increased incidence of childhood leukemia(Blood cancer) at avg exposure of only 3 mG. Also they have called out that some utility workers exposed to high levels of emf have increase risks of Lur Gehrig's disease.

They also call out that most impacts of EMF from high voltage lines dissipate at ~300 feet.

These are available on Page 2 & Page 3 of this report: https://portal.ct.gov/-/media/departments-and-agencies/dph/dph/environmental_health/eoha/pdf/emffactsheet2008pdf.pdf

This report has citations from WHO , National Institute of Environmental Health Sciences and California Department of Health Services.

https://www.niehs.nih.gov/sites/default/files/health/materials/electric_and_magnetic_fields_associated_with_the_use_of_electric_power_questions_and_answers_english_508.pdf

Some other questions around the EMF study map shared during presentation on Aug 22 2024:

1. Have you conducted an existing EMF study to identify the current value of the community ?

2. Are your emf study values based on the cumulative, or interference of existing emf and potential emf.

3. Emf value was calculated based on existing studies. What was the delta between mathematical modeling and actual values (from existing structures).

4. What is the delta between underground and overhead structures' emf values?

5. Can you provide the same for Route options B and C?

6. What happens when electrification of rail lines happens- as this is already planned for the future? Have you potentially considered the cumulative EMF effect in coexistence of the high power lines and with railway lines' electrification? Will the EMF values not be much higher then?

7. Can you share the mathematical modeling maps of Emf for 115k, 230k and the next two higher values of the power line ?

8. Can you share Emf maps from existing structures of 115k, 230 k and the next 2 higher values of the power line?

9. Please share any emf related information that you have especially if it contains assumptions for any calculations so we can understand the effects of current project and future projects.

10. Why does the electric pole structure proposed have wider diameter at the top? Can you share the design of the top of the pole ? Can it be extended by adding another section by bolting, welding or any other method? If so, what extra voltage can be added to the line?

11. what is the proposed power consumption of 95054 zip code for the next 5, 10 and 15 years in the master plan ?

Reference #3

Page 174- Section 5.21- Corona and induced current effect:

Personal observation#3

The railway line's proximity to the proposed high transmission lines is very concerning. The centerline distance from proposed lines to railway line is aproximately 50 feet per google maps with some margin for error. As per the report there are no Corona rings proposed for the 115KV lines. There seems to be negligence in design in consideration of the hazards posed by these high voltage lines as Corona effect can transfer current to railway lines. All the residents are at a high risk of accidental hazards given the proximity of the railway line, this project is adding on to the hazards. This section is only stating information about what Corona effect is, as may be required by law, which by the way is again a copy paste from an old report. The only concern discussed in more depth is the audible noise level. The concerns are presented to imply that this is not significant by stating that 115KV lines pose less than significant risk**.**

Reference #4: Post meeting material from March 19th 2024
@https://santaclara.legistar.com/LegislationDetail.aspx?ID=6582415&GUID=E6E14646-3CF7-4D15-BB98-F18580696012&Options=&Search=

Personal observation#4: At surface level, it looks like Option #A was selected only based on Cost perspective, without any consideration to human health, young children, property values, Corona effect, long term sustainability perspective or any other factors. While its important to understand the results of CEQA study, its extremely critical to understand the negative impact of EMF on the many young children living around the proposed transmission lines. Without extensive research and study on the impact to young children and adult heath, we should not be approving such an incomplete proposal.

Page 6 of this document stated that the preferred route A cost of construction is $9.5 million. In discussions with several real estate agents in the region, I have unanimously found all to agree that the real estate values of residences in close proximity to power lines goes down. Its hard to find potential buyers and most folks refrain from buying a house too close to high power transmission lines. There are 1000 plus residences in the area affected by this project. Even if we were to make very rough assumptions, and assume minimal cost reduction in property values and take an average loss of $100,000 per property in the current year, that goes to $100,000,000 of loss of equity to the public. This is not even accounting the businesses affected by this project. This long explanation was to raise a point that if the selection of route A was saving money to the city, this is costing a huge financial loss to the

public, which is not acceptable. This decrease in property values will also directly impact the tax collection by the Santa Clara Assessor and result in lower tax revenue coming into the city of Santa Clara.

Reference #5 : Page 49 of report- Figure 5.1-2. Wall separating residences and Lafayette Street.

Personal observation#5: *The picture is taken conveniently from the other side of the railway line which is actually Kingsbury street, inside a private community and not Lafayette street. This is further away from the proposed SVP lines. This is very misleading; see snapshots taken from Google maps below*

And this is what is included on the report:

Figure 5.1-2. Wall Separating Residences and Lafayette Street

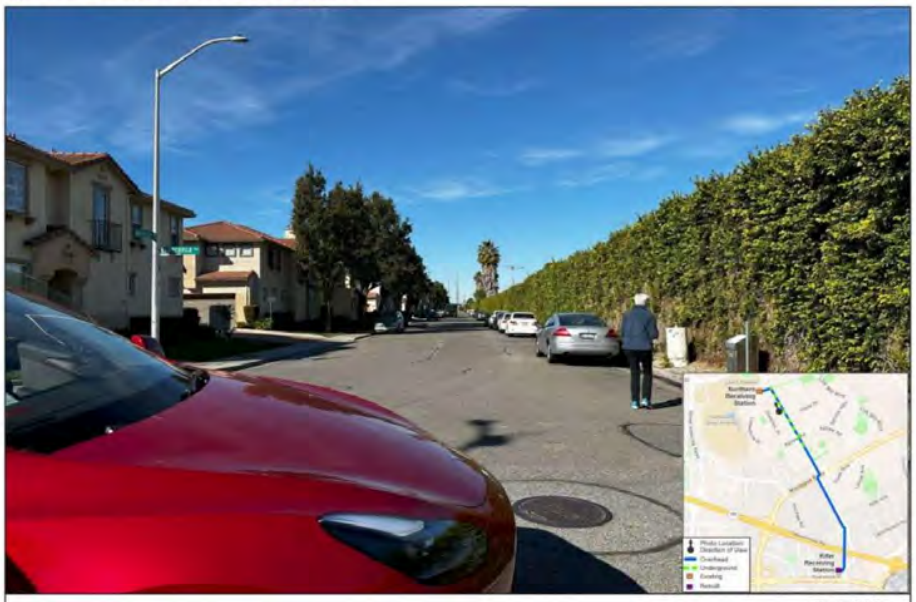

Figure 5.1-2
Wall Separating Residences and Lafayette Street

The Mission Garden Townhome community has no walls as such and the main entry to residences face the road directly and are the most impacted. There are several other single family homes on Lafayette street with the same impact, having an entryway directly on the street. This and including other citations of reusing sections of older reports, is all in all absolutely unacceptable and instills distrust. This further shows incompetency of the agency/ agencies preparing this report.

Conclusion: *This project's initial study needs to expand beyond CEQA for approval from the public. The limited scope of CEQA has failed to address the following concerns we have:*

- *Health hazards due to EMF levels.- This is by far the gravest concern and CEQA is clearly not qualified to study that.*
- *Reduced property values- several references provided below.*
- *Loss of Aesthetic appeal for potential real estate buyers/ new and current businesses.*
- *Increase in audible noise levels during and post construction, which is already high in the area with presence of railway line and air traffic route.*
- *Increased fire hazard/ risk of other accidents.*
- *Induced current on railway lines with close proximity/ corona effect- CEQA report did not clearly address this for a 115KV line.*
- *Economic effect on the community from small to larger scale based on all of the above.*

*We request further investigation and revisit other routes or proposals to resolve the power needs of the city. We have to ensure our and our kids' health is not at stake in the name of development and infrastructure and are not in agreement for this project to move forward****. We cannot approve this to move forward as of now given the lack of study and absence of a satisfactory solution/ mitigation provided in favor/ assurance to public health.***

Additional References:

Research on effects of EMF on humans:

1. ***https://www.ncbi.nlm.nih.gov/pmc/articles/PMC6025786/***

This research reinforces the concerns of EMF exposure effect on human health.

2. ***https://www.epa.gov/radtown/electric-and-magnetic-fields-power-lines***

This resource suggests taking precautions and keeping distance or limiting exposure. Residents would no longer have either of these two options per the current proposals if they are living there 24-7.

What You Can Do

If you are concerned about possible health risks from electric and magnetic fields, you can:

- **Increase the distance between yourself and the source.** The greater the distance between you and the source of EMF, the lower your exposure.
- **Limit the time spent around the source.** The less time you spend near EMF, the lower your exposure.

3. ***https://www.fastexpert.com/blog/should-i-buy-a-house-near-power-lines/***

These are points of view from a real estate expert who clearly states that property value declines proportionately to the distance of the property from high tension lines. People have apprehensions whether or not research clearly defines the risk. Potential buyers might have low priority for a property too close to a high tension power line.

4. ***https://orchard.com/blog/posts/power-lines-and-property-value***

Another research on real estate values lowered due to high tension power lines proximity.

*We request further investigation and revisit other routes or proposals to resolve the power needs of the city. We have to ensure our and our kids' health is not at stake in the name of development and infrastructure and are not in agreement for this project to move forward****. We cannot approve this to move forward as of now given the lack of study and absence of a satisfactory solution/ mitigation provided in favor/ assurance to public health.***

Thanks,
Candida

Email: NRS-KRS 115 kV T-Line

From: Johny Rufus John <johnyrufus@gmail.com>
Sent: Friday, August 30, 2024 12:46 PM
To: NRS-KRS Project; mayorandcouncil@santaclaraca.gov; info@siliconvalleypower.com; planningcommission@santaclaraca.gov; manager@santaclaraca.gov; AJackman@santaclaraca.gov
Subject: Concerns Regarding Upcoming High Power Electric Wire Poles in Our Community for the upcoming SVP project connecting the Northern Receiving Station NRS to Kifer receiving station (KRS)- NRS-KRS 115kV Transmission Line Project

To Whomsoever it may concern,

We are residents of Santa Clara that will be negatively impacted by the "NRS-KRS 115kV Transmission Line Project". We have collectively reviewed the draft Initial Study/ Mitigated Negative declaration for "NRS-KRS 115kV Transmission Line Project" from July 2024. After reviewing this report and also attending the virtual and in person meetings, here are some references to emphasize our various concerns.

Reference #1 : CEQA's reporting includes these State reviewing agencies: California Air Resources Board (ARB), California Department of Fish and Wildlife, Bay Delta Region 3 (CDFW), California Department of Forestry and Fire Protection (CAL FIRE), California Department of Parks and Recreation, California Department of Toxic Substances Control (DTSC), California Department of Transportation, District 4 (DOT), California Department of Transportation, Division of Aeronautics (DOT), California Department of Transportation, Division of Transportation Planning (DOT), California Department of Water Resources (DWR), California Energy Commission, California Highway Patrol (CHP), California Native American Heritage Commission (NAHC), California Natural Resources Agency, California Public Utilities Commission (CPUC), California Regional Water Quality Control Board, San Francisco Bay Region 2 (RWQCB), Office of Historic Preservation, State Water Resources Control Board, Division of Drinking Water.

Personal observation#1 : *None of these agencies has any association with human health. CEQA reporting is not qualified enough to force the public to compromise on health concerns. Other agencies need to be involved to review this proposal, that are qualified to study the effect on " humans", not just wildlife and vegetation, or " environment. The checklist is completely devoid of our gravest humanitarian concerns. It is quite shocking that the project has not included any study to understand the potential impact of EMF waves on human lives, given that the transmission lines are potentially less than 60 feet from the closest dwellings. The city of Santa Clara needs to step in and have third party/ independent studies completed in favor of human health.*

Reference #2: Page 41 of report- Section 4.15. Electric and Magnetic Fields summary.

Personal observation#2 : *This consideration was completely absent earlier. Only after the residents raised their voices, this section was added. To our greatest disappointment, this section is copied over from an older report on the "South Loop Reconfiguration Project" from 2020. One would have expected that a new study would have been conducted for a project this size. The lack of due diligence and ignorance towards the specifics of this project are apparent and not acceptable. In fact we have found several sections of this older report as being reused across the entire report.*

The EMP map shared during the in person meeting had several flaws and we would like to question the viability of the study that was completed. What time of the day was the study completed and on what models were the values based on since these were done on assumption for the EMF values that would

be there once the project is complete. Since we have seen the several sections of the report redundantly copied over from other reports, we would like a more detailed analysis of this report.

Regarding EMF concerns for human health, there are plenty of scientific studies that do indicate the grave concern on human health with EMF exposures and we cannot ignore this aspect. Here is a reference to an article and there are plenty of articles listed here under references:

https://psc.wi.gov/Documents/Brochures/EMF.pdf

There are not enough references listed in the draft report provided to us, and the explanation provided seems to be conveniently using studies that prove otherwise. This needs more investigation and references. The solution provided as raising the height of the poles and increasing the distance is non-existent. It was confirmed during the in person meeting that the design will not be altered and the height was already designed as required according to the SVP team present there. It seems that the preparers of this report did not even read the report after copying pasting from the old report as evident in the list of proposed solutions is not applicable here.

The live presentation on August 22nd showed the comparison of EMF values of household objects as a means to show that everyday household items carry a similar range of mG(milli Gauss) units. This comparison was inherently flawed since it mentioned that the household devices were producing those level at 1 feet while those indicated for 115KVf lines were at 60 feet. further these household devices do not operate 24X7 similar to the transmission lines.

There were a lot of citations of reports showcasing that no clear proof of EMF to human health exists but we would like to also point out certain states like Connecticut Department of Public Health have cited reports that have shown an increased incidence of childhood leukemia(Blood cancer) at avg exposure of only 3 mG. Also they have called out that some utility workers exposed to high levels of emf have increase risks of Lur Gehrig's disease.

They also call out that most impacts of EMF from high voltage lines dissipate at ~300 feet.

These are available on Page 2 & Page 3 of this report: https://portal.ct.gov/-/media/departments-and-agencies/dph/dph/environmental_health/eoha/pdf/emffactsheet2008pdf.pdf

This report has citations from WHO , National Institute of Environmental Health Sciences and California Department of Health Services.

https://www.niehs.nih.gov/sites/default/files/health/materials/electric_and_magnetic_fields_associated_with_the_use_of_electric_power_questions_and_answers_english_508.pdf

Some other questions around the EMF study map shared during presentation on Aug 22 2024:

1. Have you conducted an existing EMF study to identify the current value of the community ?

2. Are your emf study values based on the cumulative, or interference of existing emf and potential emf.

3. Emf value was calculated based on existing studies. What was the delta between mathematical modeling and actual values (from existing structures).

4. What is the delta between underground and overhead structures' emf values?

5. Can you provide the same for Route options B and C?

6. What happens when electrification of rail lines happens- as this is already planned for the future? Have you potentially considered the cumulative EMF effect in coexistence of the high power lines and with railway lines' electrification? Will the EMF values not be much higher then?

7. Can you share the mathematical modeling maps of Emf for 115k, 230k and the next two higher values of the power line ?

8. Can you share Emf maps from existing structures of 115k, 230 k and the next 2 higher values of the power line?

9. Please share any emf related information that you have especially if it contains assumptions for any calculations so we can understand the effects of current project and future projects.

10. Why does the electric pole structure proposed have wider diameter at the top? Can you share the design of the top of the pole ? Can it be extended by adding another section by bolting, welding or any other method? If so, what extra voltage can be added to the line?

11. what is the proposed power consumption of 95054 zip code for the next 5, 10 and 15 years in the master plan ?

Reference #3

Page 174- Section 5.21- Corona and induced current effect:

Personal observation#3

The railway line's proximity to the proposed high transmission lines is very concerning. The centerline distance from proposed lines to railway line is aproximately 50 feet per google maps with some margin for error. As per the report there are no Corona rings proposed for the 115KV lines. There seems to be negligence in design in consideration of the hazards posed by these high voltage lines as Corona effect can transfer current to railway lines. All the residents are at a high risk of accidental hazards given the proximity of the railway line, this project is adding on to the hazards. This section is only stating information about what Corona effect is, as may be required by law, which by the way is again a copy paste from an old report. The only concern discussed in more depth is the audible noise level. The concerns are presented to imply that this is not significant by stating that 115KV lines pose less than significant risk**.**

Reference #4: Post meeting material from March 19th 2024
@https://santaclara.legistar.com/LegislationDetail.aspx?ID=6582415&GUID=E6E14646-3CF7-4D15-BB98-F18580696012&Options=&Search=

Personal observation#4: At surface level, it looks like Option #A was selected only based on Cost perspective, without any consideration to human health, young children, property values, Corona effect, long term sustainability perspective or any other factors. While its important to understand the results of CEQA study, its extremely critical to understand the negative impact of EMF on the many young children living around the proposed transmission lines. Without extensive research and study on the impact to young children and adult heath, we should not be approving such an incomplete proposal.

Page 6 of this document stated that the preferred route A cost of construction is $9.5 million. In discussions with several real estate agents in the region, I have unanimously found all to agree that the real estate values of residences in close proximity to power lines goes down. Its hard to find potential buyers and most folks refrain from buying a house too close to high power transmission lines. There are 1000 plus residences in the area affected by this project. Even if we were to make very rough assumptions, and assume minimal cost reduction in property values and take an average loss of $100,000 per property in the current year, that goes to $100,000,000 of loss of equity to the public. This is not even accounting the businesses affected by this project. This long explanation was to raise a point that if the selection of route A was saving money to the city, this is costing a huge financial loss to the

public, which is not acceptable. This decrease in property values will also directly impact the tax collection by the Santa Clara Assessor and result in lower tax revenue coming into the city of Santa Clara.

Reference #5 : Page 49 of report- Figure 5.1-2. Wall separating residences and Lafayette Street.

Personal observation#5: *The picture is taken conveniently from the other side of the railway line which is actually Kingsbury street, inside a private community and not Lafayette street. This is further away from the proposed SVP lines. This is very misleading; see snapshots taken from Google maps below*

And this is what is included on the report:

Figure 5.1-2. Wall Separating Residences and Lafayette Street

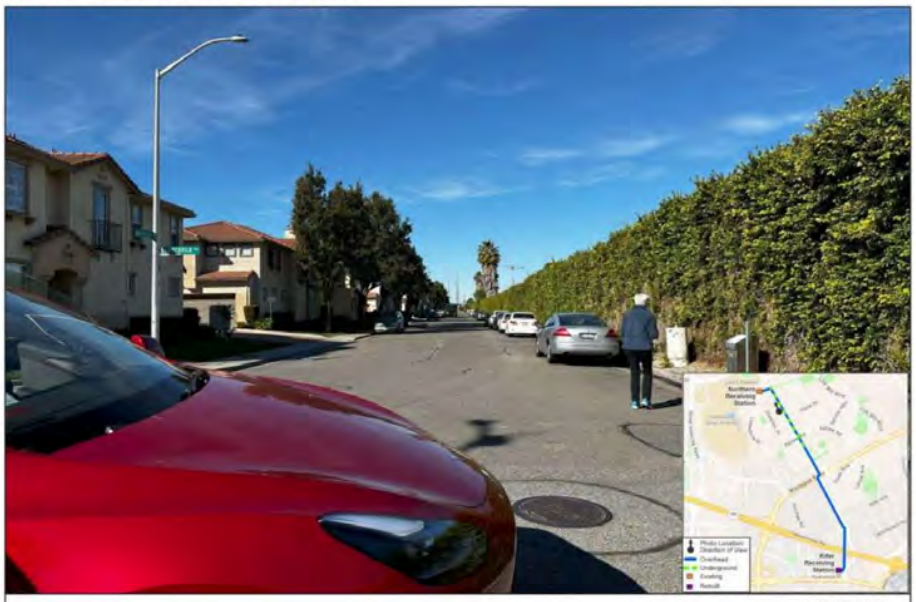

Figure 5.1-2
Wall Separating Residences and Lafayette Street

The Mission Garden Townhome community has no walls as such and the main entry to residences face the road directly and are the most impacted. There are several other single family homes on Lafayette street with the same impact, having an entryway directly on the street. This and including other citations of reusing sections of older reports, is all in all absolutely unacceptable and instills distrust. This further shows incompetency of the agency/ agencies preparing this report.

Conclusion: *This project's initial study needs to expand beyond CEQA for approval from the public. The limited scope of CEQA has failed to address the following concerns we have:*

- *Health hazards due to EMF levels.- This is by far the gravest concern and CEQA is clearly not qualified to study that.*
- *Reduced property values- several references provided below.*
- *Loss of Aesthetic appeal for potential real estate buyers/ new and current businesses.*
- *Increase in audible noise levels during and post construction, which is already high in the area with presence of railway line and air traffic route.*
- *Increased fire hazard/ risk of other accidents.*
- *Induced current on railway lines with close proximity/ corona effect- CEQA report did not clearly address this for a 115KV line.*
- *Economic effect on the community from small to larger scale based on all of the above.*

*We request further investigation and revisit other routes or proposals to resolve the power needs of the city. We have to ensure our and our kids' health is not at stake in the name of development and infrastructure and are not in agreement for this project to move forward****. We cannot approve this to move forward as of now given the lack of study and absence of a satisfactory solution/ mitigation provided in favor/ assurance to public health.***

Additional References:

Research on effects of EMF on humans:

1. ***https://www.ncbi.nlm.nih.gov/pmc/articles/PMC6025786/***

This research reinforces the concerns of EMF exposure effect on human health.

2. ***https://www.epa.gov/radtown/electric-and-magnetic-fields-power-lines***

This resource suggests taking precautions and keeping distance or limiting exposure. Residents would no longer have either of these two options per the current proposals if they are living there 24-7.

What You Can Do

If you are concerned about possible health risks from electric and magnetic fields, you can:

- **Increase the distance between yourself and the source.** The greater the distance between you and the source of EMF, the lower your exposure.
- **Limit the time spent around the source.** The less time you spend near EMF, the lower your exposure.

3. ***https://www.fastexpert.com/blog/should-i-buy-a-house-near-power-lines/***

These are points of view from a real estate expert who clearly states that property value declines proportionately to the distance of the property from high tension lines. People have apprehensions whether or not research clearly defines the risk. Potential buyers might have low priority for a property too close to a high tension power line.

4. ***https://orchard.com/blog/posts/power-lines-and-property-value***

Another research on real estate values lowered due to high tension power lines proximity.

*We request further investigation and revisit other routes or proposals to resolve the power needs of the city. We have to ensure our and our kids' health is not at stake in the name of development and infrastructure and are not in agreement for this project to move forward****. We cannot approve this to move forward as of now given the lack of study and absence of a satisfactory solution/ mitigation provided in favor/ assurance to public health.***

Thanks,
Johny

Email: NRS-KRS 115 kV T-Line

From: MEHUL SURESH JAIN <mehulsj162@gmail.com>
Sent: Friday, August 30, 2024 12:38 PM
To: NRS-KRS Project; mayorandcouncil@santaclaraca.gov; info@siliconvalleypower.com; planningcommission@santaclaraca.gov; manager@santaclaraca.gov; AJackman@santaclaraca.gov
Subject: Concerns Regarding Upcoming High Power Electric Wire Poles in Our Community for the upcoming SVP project connecting the Northern Receiving Station NRS to Kifer receiving station (KRS)- NRS-KRS 115kV Transmission Line Project

To Whomsoever it may concern,

We are residents of Santa Clara that will be negatively impacted by the "NRS-KRS 115kV Transmission Line Project". We have collectively reviewed the draft Initial Study/ Mitigated Negative declaration for "NRS-KRS 115kV Transmission Line Project" from July 2024. After reviewing this report and also attending the virtual and in person meetings, here are some references to emphasize our various concerns.

Reference #1 : CEQA's reporting includes these State reviewing agencies: California Air Resources Board (ARB), California Department of Fish and Wildlife, Bay Delta Region 3 (CDFW), California Department of Forestry and Fire Protection (CAL FIRE), California Department of Parks and Recreation, California Department of Toxic Substances Control (DTSC), California Department of Transportation, District 4 (DOT), California Department of Transportation, Division of Aeronautics (DOT), California Department of Transportation, Division of Transportation Planning (DOT), California Department of Water Resources (DWR), California Energy Commission, California Highway Patrol (CHP), California Native American Heritage Commission (NAHC), California Natural Resources Agency, California Public Utilities Commission (CPUC), California Regional Water Quality Control Board, San Francisco Bay Region 2 (RWQCB), Office of Historic Preservation, State Water Resources Control Board, Division of Drinking Water.

Personal observation#1 : *None of these agencies has any association with human health. CEQA reporting is not qualified enough to force the public to compromise on health concerns. Other agencies need to be involved to review this proposal, that are qualified to study the effect on " humans", not just wildlife and vegetation, or " environment. The checklist is completely devoid of our gravest humanitarian concerns. It is quite shocking that the project has not included any study to understand the potential impact of EMF waves on human lives, given that the transmission lines are potentially less than 60 feet from the closest dwellings. The city of Santa Clara needs to step in and have third party/ independent studies completed in favor of human health.*

Reference #2: Page 41 of report- Section 4.15. Electric and Magnetic Fields summary.

Personal observation#2 : *This consideration was completely absent earlier. Only after the residents raised their voices, this section was added. To our greatest disappointment, this section is copied over from an older report on the "South Loop Reconfiguration Project" from 2020. One would have expected that a new study would have been conducted for a project this size. The lack of due diligence and ignorance towards the specifics of this project are apparent and not acceptable. In fact we have found several sections of this older report as being reused across the entire report.*

The EMP map shared during the in person meeting had several flaws and we would like to question the viability of the study that was completed. What time of the day was the study completed and on what models were the values based on since these were done on assumption for the EMF values that would

be there once the project is complete. Since we have seen the several sections of the report redundantly copied over from other reports, we would like a more detailed analysis of this report.

Regarding EMF concerns for human health, there are plenty of scientific studies that do indicate the grave concern on human health with EMF exposures and we cannot ignore this aspect. Here is a reference to an article and there are plenty of articles listed here under references:

https://psc.wi.gov/Documents/Brochures/EMF.pdf

There are not enough references listed in the draft report provided to us, and the explanation provided seems to be conveniently using studies that prove otherwise. This needs more investigation and references. The solution provided as raising the height of the poles and increasing the distance is non-existent. It was confirmed during the in person meeting that the design will not be altered and the height was already designed as required according to the SVP team present there. It seems that the preparers of this report did not even read the report after copying pasting from the old report as evident in the list of proposed solutions is not applicable here.

The live presentation on August 22nd showed the comparison of EMF values of household objects as a means to show that everyday household items carry a similar range of mG(milli Gauss) units. This comparison was inherently flawed since it mentioned that the household devices were producing those level at 1 feet while those indicated for 115KVf lines were at 60 feet. further these household devices do not operate 24X7 similar to the transmission lines.

There were a lot of citations of reports showcasing that no clear proof of EMF to human health exists but we would like to also point out certain states like Connecticut Department of Public Health have cited reports that have shown an increased incidence of childhood leukemia(Blood cancer) at avg exposure of only 3 mG. Also they have called out that some utility workers exposed to high levels of emf have increase risks of Lur Gehrig's disease.

They also call out that most impacts of EMF from high voltage lines dissipate at ~300 feet.

These are available on Page 2 & Page 3 of this report: https://portal.ct.gov/-/media/departments-and-agencies/dph/dph/environmental_health/eoha/pdf/emffactsheet2008pdf.pdf

This report has citations from WHO , National Institute of Environmental Health Sciences and California Department of Health Services.

https://www.niehs.nih.gov/sites/default/files/health/materials/electric_and_magnetic_fields_associated_with_the_use_of_electric_power_questions_and_answers_english_508.pdf

Some other questions around the EMF study map shared during presentation on Aug 22 2024:

1. Have you conducted an existing EMF study to identify the current value of the community ?

2. Are your emf study values based on the cumulative, or interference of existing emf and potential emf.

3. Emf value was calculated based on existing studies. What was the delta between mathematical modeling and actual values (from existing structures).

4. What is the delta between underground and overhead structures' emf values?

5. Can you provide the same for Route options B and C?

6. What happens when electrification of rail lines happens- as this is already planned for the future? Have you potentially considered the cumulative EMF effect in coexistence of the high power lines and with railway lines' electrification? Will the EMF values not be much higher then?

7. Can you share the mathematical modeling maps of Emf for 115k, 230k and the next two higher values of the power line ?

8. Can you share Emf maps from existing structures of 115k, 230 k and the next 2 higher values of the power line?

9. Please share any emf related information that you have especially if it contains assumptions for any calculations so we can understand the effects of current project and future projects.

10. Why does the electric pole structure proposed have wider diameter at the top? Can you share the design of the top of the pole ? Can it be extended by adding another section by bolting, welding or any other method? If so, what extra voltage can be added to the line?

11. what is the proposed power consumption of 95054 zip code for the next 5, 10 and 15 years in the master plan ?

Reference #3

Page 174- Section 5.21- Corona and induced current effect:

Personal observation#3

The railway line's proximity to the proposed high transmission lines is very concerning. The centerline distance from proposed lines to railway line is aproximately 50 feet per google maps with some margin for error. As per the report there are no Corona rings proposed for the 115KV lines. There seems to be negligence in design in consideration of the hazards posed by these high voltage lines as Corona effect can transfer current to railway lines. All the residents are at a high risk of accidental hazards given the proximity of the railway line, this project is adding on to the hazards. This section is only stating information about what Corona effect is, as may be required by law, which by the way is again a copy paste from an old report. The only concern discussed in more depth is the audible noise level. The concerns are presented to imply that this is not significant by stating that 115KV lines pose less than significant risk**.**

Reference #4: Post meeting material from March 19th 2024
@https://santaclara.legistar.com/LegislationDetail.aspx?ID=6582415&GUID=E6E14646-3CF7-4D15-BB98-F18580696012&Options=&Search=

Personal observation#4: At surface level, it looks like Option #A was selected only based on Cost perspective, without any consideration to human health, young children, property values, Corona effect, long term sustainability perspective or any other factors. While its important to understand the results of CEQA study, its extremely critical to understand the negative impact of EMF on the many young children living around the proposed transmission lines. Without extensive research and study on the impact to young children and adult heath, we should not be approving such an incomplete proposal.

Page 6 of this document stated that the preferred route A cost of construction is $9.5 million. In discussions with several real estate agents in the region, I have unanimously found all to agree that the real estate values of residences in close proximity to power lines goes down. Its hard to find potential buyers and most folks refrain from buying a house too close to high power transmission lines. There are 1000 plus residences in the area affected by this project. Even if we were to make very rough assumptions, and assume minimal cost reduction in property values and take an average loss of $100,000 per property in the current year, that goes to $100,000,000 of loss of equity to the public. This is not even accounting the businesses affected by this project. This long explanation was to raise a point that if the selection of route A was saving money to the city, this is costing a huge financial loss to the

public, which is not acceptable. This decrease in property values will also directly impact the tax collection by the Santa Clara Assessor and result in lower tax revenue coming into the city of Santa Clara.

Reference #5 : Page 49 of report- Figure 5.1-2. Wall separating residences and Lafayette Street.

Personal observation#5: *The picture is taken conveniently from the other side of the railway line which is actually Kingsbury street, inside a private community and not Lafayette street. This is further away from the proposed SVP lines. This is very misleading; see snapshots taken from Google maps below*

And this is what is included on the report:

Figure 5.1-2. Wall Separating Residences and Lafayette Street

Figure 5.1-2
Wall Separating Residences and Lafayette Street

The Mission Garden Townhome community has no walls as such and the main entry to residences face the road directly and are the most impacted. There are several other single family homes on Lafayette street with the same impact, having an entryway directly on the street. This and including other citations of reusing sections of older reports, is all in all absolutely unacceptable and instills distrust. This further shows incompetency of the agency/ agencies preparing this report.

Conclusion: *This project's initial study needs to expand beyond CEQA for approval from the public. The limited scope of CEQA has failed to address the following concerns we have:*

- *Health hazards due to EMF levels.- This is by far the gravest concern and CEQA is clearly not qualified to study that.*
- *Reduced property values- several references provided below.*
- *Loss of Aesthetic appeal for potential real estate buyers/ new and current businesses.*
- *Increase in audible noise levels during and post construction, which is already high in the area with presence of railway line and air traffic route.*
- *Increased fire hazard/ risk of other accidents.*
- *Induced current on railway lines with close proximity/ corona effect- CEQA report did not clearly address this for a 115KV line.*
- *Economic effect on the community from small to larger scale based on all of the above.*

*We demand further investigation and revisit other routes or proposals to resolve the power needs of the city. We have to ensure our and our kids' health is not at stake in the name of development and infrastructure and are not in agreement for this project to move forward****. We cannot approve this to move forward as of now given the lack of study and absence of a satisfactory solution/ mitigation provided in favor/ assurance to public health.***

Additional References:

Research on effects of EMF on humans:

1. ***https://www.ncbi.nlm.nih.gov/pmc/articles/PMC6025786/***

This research reinforces the concerns of EMF exposure effect on human health.

2. ***https://www.epa.gov/radtown/electric-and-magnetic-fields-power-lines***

This resource suggests taking precautions and keeping distance or limiting exposure. Residents would no longer have either of these two options per the current proposals if they are living there 24-7.

What You Can Do

If you are concerned about possible health risks from electric and magnetic fields, you can:

- **Increase the distance between yourself and the source.** The greater the distance between you and the source of EMF, the lower your exposure.
- **Limit the time spent around the source.** The less time you spend near EMF, the lower your exposure.

3. ***https://www.fastexpert.com/blog/should-i-buy-a-house-near-power-lines/***

These are points of view from a real estate expert who clearly states that property value declines proportionately to the distance of the property from high tension lines. People have apprehensions whether or not research clearly defines the risk. Potential buyers might have low priority for a property too close to a high tension power line.

4. ***https://orchard.com/blog/posts/power-lines-and-property-value***

Another research on real estate values lowered due to high tension power lines proximity.

Best Regards,

Mehul Jain

Email: NRS-KRS 115 kV T-Line

From: Priyadarshini Vijayakumar <priyan711@gmail.com>
Sent: Friday, August 30, 2024 11:52 AM
To: NRS-KRS Project; mayorandcouncil@santaclaraca.gov; info@siliconvalleypower.com; planningcommission@santaclaraca.gov; manager@santaclaraca.gov; AJackman@santaclaraca.gov
Subject: Concerns Regarding Upcoming High Power Electric Wire Poles in Our Community for the upcoming SVP project connecting the Northern Receiving Station NRS to Kifer receiving station (KRS)- NRS-KRS 115kV Transmission Line Project

To Whomsoever it may concern,

We are residents of Santa Clara that will be negatively impacted by the "NRS-KRS 115kV Transmission Line Project". We have collectively reviewed the draft Initial Study/ Mitigated Negative declaration for "NRS-KRS 115kV Transmission Line Project" from July 2024. After reviewing this report and also attending the virtual and in person meetings, here are some references to emphasize our various concerns.

Reference #1 : CEQA's reporting includes these State reviewing agencies: California Air Resources Board (ARB), California Department of Fish and Wildlife, Bay Delta Region 3 (CDFW), California Department of Forestry and Fire Protection (CAL FIRE), California Department of Parks and Recreation, California Department of Toxic Substances Control (DTSC), California Department of Transportation, District 4 (DOT), California Department of Transportation, Division of Aeronautics (DOT), California Department of Transportation, Division of Transportation Planning (DOT), California Department of Water Resources (DWR), California Energy Commission, California Highway Patrol (CHP), California Native American Heritage Commission (NAHC), California Natural Resources Agency, California Public Utilities Commission (CPUC), California Regional Water Quality Control Board, San Francisco Bay Region 2 (RWQCB), Office of Historic Preservation, State Water Resources Control Board, Division of Drinking Water.

Personal observation#1 : *None of these agencies has any association with human health. CEQA reporting is not qualified enough to force the public to compromise on health concerns. Other agencies need to be involved to review this proposal, that are qualified to study the effect on " humans", not just wildlife and vegetation, or " environment. The checklist is completely devoid of our gravest humanitarian concerns. It is quite shocking that the project has not included any study to understand the potential impact of EMF waves on human lives, given that the transmission lines are potentially less than 60 feet from the closest dwellings. The city of Santa Clara needs to step in and have third party/ independent studies completed in favor of human health.*

Reference #2: Page 41 of report- Section 4.15. Electric and Magnetic Fields summary.

Personal observation#2 : *This consideration was completely absent earlier. Only after the residents raised their voices, this section was added. To our greatest disappointment, this section is copied over from an older report on the "South Loop Reconfiguration Project" from 2020. One would have expected that a new study would have been conducted for a project this size. The lack of due diligence and ignorance towards the specifics of this project are apparent and not acceptable. In fact we have found several sections of this older report as being reused across the entire report.*

The EMP map shared during the in person meeting had several flaws and we would like to question the viability of the study that was completed. What time of the day was the study completed and on what models were the values based on since these were done on assumption for the EMF values that would

be there once the project is complete. Since we have seen the several sections of the report redundantly copied over from other reports, we would like a more detailed analysis of this report.

Regarding EMF concerns for human health, there are plenty of scientific studies that do indicate the grave concern on human health with EMF exposures and we cannot ignore this aspect. Here is a reference to an article and there are plenty of articles listed here under references:

https://psc.wi.gov/Documents/Brochures/EMF.pdf

There are not enough references listed in the draft report provided to us, and the explanation provided seems to be conveniently using studies that prove otherwise. This needs more investigation and references. The solution provided as raising the height of the poles and increasing the distance is non-existent. It was confirmed during the in person meeting that the design will not be altered and the height was already designed as required according to the SVP team present there. It seems that the preparers of this report did not even read the report after copying pasting from the old report as evident in the list of proposed solutions is not applicable here.

The live presentation on August 22nd showed the comparison of EMF values of household objects as a means to show that everyday household items carry a similar range of mG(milli Gauss) units. This comparison was inherently flawed since it mentioned that the household devices were producing those level at 1 feet while those indicated for 115KVf lines were at 60 feet. further these household devices do not operate 24X7 similar to the transmission lines.

There were a lot of citations of reports showcasing that no clear proof of EMF to human health exists but we would like to also point out certain states like Connecticut Department of Public Health have cited reports that have shown an increased incidence of childhood leukemia(Blood cancer) at avg exposure of only 3 mG. Also they have called out that some utility workers exposed to high levels of emf have increase risks of Lur Gehrig's disease.

They also call out that most impacts of EMF from high voltage lines dissipate at ~300 feet.

These are available on Page 2 & Page 3 of this report: https://portal.ct.gov/-/media/departments-and-agencies/dph/dph/environmental_health/eoha/pdf/emffactsheet2008pdf.pdf

This report has citations from WHO , National Institute of Environmental Health Sciences and California Department of Health Services.

https://www.niehs.nih.gov/sites/default/files/health/materials/electric_and_magnetic_fields_associated_with_the_use_of_electric_power_questions_and_answers_english_508.pdf

Some other questions around the EMF study map shared during presentation on Aug 22 2024:

1. Have you conducted an existing EMF study to identify the current value of the community ?

2. Are your emf study values based on the cumulative, or interference of existing emf and potential emf.

3. Emf value was calculated based on existing studies. What was the delta between mathematical modeling and actual values (from existing structures).

4. What is the delta between underground and overhead structures' emf values?

5. Can you provide the same for Route options B and C?

6. What happens when electrification of rail lines happens- as this is already planned for the future? Have you potentially considered the cumulative EMF effect in coexistence of the high power lines and with railway lines' electrification? Will the EMF values not be much higher then?

7. Can you share the mathematical modeling maps of Emf for 115k, 230k and the next two higher values of the power line ?

8. Can you share Emf maps from existing structures of 115k, 230 k and the next 2 higher values of the power line?

9. Please share any emf related information that you have especially if it contains assumptions for any calculations so we can understand the effects of current project and future projects.

10. Why does the electric pole structure proposed have wider diameter at the top? Can you share the design of the top of the pole ? Can it be extended by adding another section by bolting, welding or any other method? If so, what extra voltage can be added to the line?

11. what is the proposed power consumption of 95054 zip code for the next 5, 10 and 15 years in the master plan ?

Reference #3

Page 174- Section 5.21- Corona and induced current effect:

Personal observation#3

The railway line's proximity to the proposed high transmission lines is very concerning. The centerline distance from proposed lines to railway line is aproximately 50 feet per google maps with some margin for error. As per the report there are no Corona rings proposed for the 115KV lines. There seems to be negligence in design in consideration of the hazards posed by these high voltage lines as Corona effect can transfer current to railway lines. All the residents are at a high risk of accidental hazards given the proximity of the railway line, this project is adding on to the hazards. This section is only stating information about what Corona effect is, as may be required by law, which by the way is again a copy paste from an old report. The only concern discussed in more depth is the audible noise level. The concerns are presented to imply that this is not significant by stating that 115KV lines pose less than significant risk**.**

Reference #4: Post meeting material from March 19th 2024
@https://santaclara.legistar.com/LegislationDetail.aspx?ID=6582415&GUID=E6E14646-3CF7-4D15-BB98-F18580696012&Options=&Search=

Personal observation#4: At surface level, it looks like Option #A was selected only based on Cost perspective, without any consideration to human health, young children, property values, Corona effect, long term sustainability perspective or any other factors. While its important to understand the results of CEQA study, its extremely critical to understand the negative impact of EMF on the many young children living around the proposed transmission lines. Without extensive research and study on the impact to young children and adult heath, we should not be approving such an incomplete proposal.

Page 6 of this document stated that the preferred route A cost of construction is $9.5 million. In discussions with several real estate agents in the region, I have unanimously found all to agree that the real estate values of residences in close proximity to power lines goes down. Its hard to find potential buyers and most folks refrain from buying a house too close to high power transmission lines. There are 1000 plus residences in the area affected by this project. Even if we were to make very rough

assumptions, and assume minimal cost reduction in property values and take an average loss of $100,000 per property in the current year, that goes to $100,000,000 of loss of equity to the public. This is not even accounting the businesses affected by this project. This long explanation was to raise a point that if the selection of route A was saving money to the city, this is costing a huge financial loss to the public, which is not acceptable. This decrease in property values will also directly impact the tax collection by the Santa Clara Assessor and result in lower tax revenue coming into the city of Santa Clara.

Reference #5 : Page 49 of report- Figure 5.1-2. Wall separating residences and Lafayette Street.

Personal observation#5: *The picture is taken conveniently from the other side of the railway line which is actually Kingsbury street, inside a private community and not Lafayette street. This is further away from the proposed SVP lines. This is very misleading; see snapshots taken from Google maps below*

And this is what is included on the report:

Figure 5.1-2. Wall Separating Residences and Lafayette Street

Figure 5.1-2
Wall Separating Residences and Lafayette Street

The Mission Garden Townhome community has no walls as such and the main entry to residences face the road directly and are the most impacted. There are several other single family homes on Lafayette street with the same impact, having an entryway directly on the street. This and including other citations of reusing sections of older reports, is all in all absolutely unacceptable and instills distrust. This further shows incompetency of the agency/ agencies preparing this report.

Conclusion: *This project's initial study needs to expand beyond CEQA for approval from the public. The limited scope of CEQA has failed to address the following concerns we have:*

- *Health hazards due to EMF levels.- This is by far the gravest concern and CEQA is clearly not qualified to study that.*
- *Reduced property values- several references provided below.*
- *Loss of Aesthetic appeal for potential real estate buyers/ new and current businesses.*
- *Increase in audible noise levels during and post construction, which is already high in the area with presence of railway line and air traffic route.*
- *Increased fire hazard/ risk of other accidents.*
- *Induced current on railway lines with close proximity/ corona effect- CEQA report did not clearly address this for a 115KV line.*
- *Economic effect on the community from small to larger scale based on all of the above.*

*We demand further investigation and revisit other routes or proposals to resolve the power needs of the city. We have to ensure our and our kids' health is not at stake in the name of development and infrastructure and are not in agreement for this project to move forward**. We cannot approve this to move forward as of now given the lack of study and absence of a satisfactory solution/ mitigation provided in favor/ assurance to public health.***

Additional References:

Research on effects of EMF on humans:

1. https://www.ncbi.nlm.nih.gov/pmc/articles/PMC6025786/

This research reinforces the concerns of EMF exposure effect on human health.

2. https://www.epa.gov/radtown/electric-and-magnetic-fields-power-lines

This resource suggests taking precautions and keeping distance or limiting exposure. Residents would no longer have either of these two options per the current proposals if they are living there 24-7.

What You Can Do

If you are concerned about possible health risks from electric and magnetic fields, you can:

- **Increase the distance between yourself and the source.** The greater the distance between you and the source of EMF, the lower your exposure.
- **Limit the time spent around the source.** The less time you spend near EMF, the lower your exposure.

3. ***https://www.fastexpert.com/blog/should-i-buy-a-house-near-power-lines/***

These are points of view from a real estate expert who clearly states that property value declines proportionately to the distance of the property from high tension lines. People have apprehensions whether or not research clearly defines the risk. Potential buyers might have low priority for a property too close to a high tension power line.

4. https://orchard.com/blog/posts/power-lines-and-property-value

Another research on real estate values lowered due to high tension power lines proximity.

Regards,
Priya

Email: NRS-KRS 115 kV T-Line

From: Manojkumar Mohanram <manoj.chinnakonda@gmail.com>
Sent: Friday, August 30, 2024 11:51 AM
To: NRS-KRS Project; mayorandcouncil@santaclaraca.gov; info@siliconvalleypower.com; planningcommission@santaclaraca.gov; manager@santaclaraca.gov; AJackman@santaclaraca.gov
Subject: Concerns Regarding Upcoming High Power Electric Wire Poles in Our Community for the upcoming SVP project connecting the Northern Receiving Station NRS to Kifer receiving station (KRS)- NRS-KRS 115kV Transmission Line Project

To Whomsoever it may concern,

We are residents of Santa Clara that will be negatively impacted by the "NRS-KRS 115kV Transmission Line Project". We have collectively reviewed the draft Initial Study/ Mitigated Negative declaration for "NRS-KRS 115kV Transmission Line Project" from July 2024. After reviewing this report and also attending the virtual and in person meetings, here are some references to emphasize our various concerns.

Reference #1 : CEQA's reporting includes these State reviewing agencies: California Air Resources Board (ARB), California Department of Fish and Wildlife, Bay Delta Region 3 (CDFW), California Department of Forestry and Fire Protection (CAL FIRE), California Department of Parks and Recreation, California Department of Toxic Substances Control (DTSC), California Department of Transportation, District 4 (DOT), California Department of Transportation, Division of Aeronautics (DOT), California Department of Transportation, Division of Transportation Planning (DOT), California Department of Water Resources (DWR), California Energy Commission, California Highway Patrol (CHP), California Native American Heritage Commission (NAHC), California Natural Resources Agency, California Public Utilities Commission (CPUC), California Regional Water Quality Control Board, San Francisco Bay Region 2 (RWQCB), Office of Historic Preservation, State Water Resources Control Board, Division of Drinking Water.

Personal observation#1 : *None of these agencies has any association with human health. CEQA reporting is not qualified enough to force the public to compromise on health concerns. Other agencies need to be involved to review this proposal, that are qualified to study the effect on " humans", not just wildlife and vegetation, or " environment. The checklist is completely devoid of our gravest humanitarian concerns. It is quite shocking that the project has not included any study to understand the potential impact of EMF waves on human lives, given that the transmission lines are potentially less than 60 feet from the closest dwellings. The city of Santa Clara needs to step in and have third party/ independent studies completed in favor of human health.*

Reference #2: Page 41 of report- Section 4.15. Electric and Magnetic Fields summary.

Personal observation#2 : *This consideration was completely absent earlier. Only after the residents raised their voices, this section was added. To our greatest disappointment, this section is copied over from an older report on the "South Loop Reconfiguration Project" from 2020. One would have expected that a new study would have been conducted for a project this size. The lack of due diligence and ignorance towards the specifics of this project are apparent and not acceptable. In fact we have found several sections of this older report as being reused across the entire report.*

The EMP map shared during the in person meeting had several flaws and we would like to question the viability of the study that was completed. What time of the day was the study completed and on what models were the values based on since these were done on assumption for the EMF values that would

be there once the project is complete. Since we have seen the several sections of the report redundantly copied over from other reports, we would like a more detailed analysis of this report.

Regarding EMF concerns for human health, there are plenty of scientific studies that do indicate the grave concern on human health with EMF exposures and we cannot ignore this aspect. Here is a reference to an article and there are plenty of articles listed here under references:

https://psc.wi.gov/Documents/Brochures/EMF.pdf

There are not enough references listed in the draft report provided to us, and the explanation provided seems to be conveniently using studies that prove otherwise. This needs more investigation and references. The solution provided as raising the height of the poles and increasing the distance is non-existent. It was confirmed during the in person meeting that the design will not be altered and the height was already designed as required according to the SVP team present there. It seems that the preparers of this report did not even read the report after copying pasting from the old report as evident in the list of proposed solutions is not applicable here.

The live presentation on August 22nd showed the comparison of EMF values of household objects as a means to show that everyday household items carry a similar range of mG(milli Gauss) units. This comparison was inherently flawed since it mentioned that the household devices were producing those level at 1 feet while those indicated for 115KVf lines were at 60 feet. further these household devices do not operate 24X7 similar to the transmission lines.

There were a lot of citations of reports showcasing that no clear proof of EMF to human health exists but we would like to also point out certain states like Connecticut Department of Public Health have cited reports that have shown an increased incidence of childhood leukemia(Blood cancer) at avg exposure of only 3 mG. Also they have called out that some utility workers exposed to high levels of emf have increase risks of Lur Gehrig's disease.

They also call out that most impacts of EMF from high voltage lines dissipate at ~300 feet.

These are available on Page 2 & Page 3 of this report: https://portal.ct.gov/-/media/departments-and-agencies/dph/dph/environmental_health/eoha/pdf/emffactsheet2008pdf.pdf

This report has citations from WHO , National Institute of Environmental Health Sciences and California Department of Health Services.

https://www.niehs.nih.gov/sites/default/files/health/materials/electric_and_magnetic_fields_associated_with_the_use_of_electric_power_questions_and_answers_english_508.pdf

Some other questions around the EMF study map shared during presentation on Aug 22 2024:

1. Have you conducted an existing EMF study to identify the current value of the community ?

2. Are your emf study values based on the cumulative, or interference of existing emf and potential emf.

3. Emf value was calculated based on existing studies. What was the delta between mathematical modeling and actual values (from existing structures).

4. What is the delta between underground and overhead structures' emf values?

5. Can you provide the same for Route options B and C?

6. What happens when electrification of rail lines happens- as this is already planned for the future? Have you potentially considered the cumulative EMF effect in coexistence of the high power lines and with railway lines' electrification? Will the EMF values not be much higher then?

7. Can you share the mathematical modeling maps of Emf for 115k, 230k and the next two higher values of the power line ?

8. Can you share Emf maps from existing structures of 115k, 230 k and the next 2 higher values of the power line?

9. Please share any emf related information that you have especially if it contains assumptions for any calculations so we can understand the effects of current project and future projects.

10. Why does the electric pole structure proposed have wider diameter at the top? Can you share the design of the top of the pole ? Can it be extended by adding another section by bolting, welding or any other method? If so, what extra voltage can be added to the line?

11. what is the proposed power consumption of 95054 zip code for the next 5, 10 and 15 years in the master plan ?

Reference #3

Page 174- Section 5.21- Corona and induced current effect:

Personal observation#3

The railway line's proximity to the proposed high transmission lines is very concerning. The centerline distance from proposed lines to railway line is aproximately 50 feet per google maps with some margin for error. As per the report there are no Corona rings proposed for the 115KV lines. There seems to be negligence in design in consideration of the hazards posed by these high voltage lines as Corona effect can transfer current to railway lines. All the residents are at a high risk of accidental hazards given the proximity of the railway line, this project is adding on to the hazards. This section is only stating information about what Corona effect is, as may be required by law, which by the way is again a copy paste from an old report. The only concern discussed in more depth is the audible noise level. The concerns are presented to imply that this is not significant by stating that 115KV lines pose less than significant risk**.**

Reference #4: Post meeting material from March 19th 2024
@https://santaclara.legistar.com/LegislationDetail.aspx?ID=6582415&GUID=E6E14646-3CF7-4D15-BB98-F18580696012&Options=&Search=

Personal observation#4: At surface level, it looks like Option #A was selected only based on Cost perspective, without any consideration to human health, young children, property values, Corona effect, long term sustainability perspective or any other factors. While its important to understand the results of CEQA study, its extremely critical to understand the negative impact of EMF on the many young children living around the proposed transmission lines. Without extensive research and study on the impact to young children and adult heath, we should not be approving such an incomplete proposal.

Page 6 of this document stated that the preferred route A cost of construction is $9.5 million. In discussions with several real estate agents in the region, I have unanimously found all to agree that the real estate values of residences in close proximity to power lines goes down. Its hard to find potential buyers and most folks refrain from buying a house too close to high power transmission lines. There are 1000 plus residences in the area affected by this project. Even if we were to make very rough

assumptions, and assume minimal cost reduction in property values and take an average loss of $100,000 per property in the current year, that goes to $100,000,000 of loss of equity to the public. This is not even accounting the businesses affected by this project. This long explanation was to raise a point that if the selection of route A was saving money to the city, this is costing a huge financial loss to the public, which is not acceptable. This decrease in property values will also directly impact the tax collection by the Santa Clara Assessor and result in lower tax revenue coming into the city of Santa Clara.

Reference #5 : Page 49 of report- Figure 5.1-2. Wall separating residences and Lafayette Street.

Personal observation#5: *The picture is taken conveniently from the other side of the railway line which is actually Kingsbury street, inside a private community and not Lafayette street. This is further away from the proposed SVP lines. This is very misleading; see snapshots taken from Google maps below*

And this is what is included on the report:

Figure 5.1-2. Wall Separating Residences and Lafayette Street

Figure 5.1-2

Wall Separating Residences and Lafayette Street

The Mission Garden Townhome community has no walls as such and the main entry to residences face the road directly and are the most impacted. There are several other single family homes on Lafayette street with the same impact, having an entryway directly on the street. This and including other citations of reusing sections of older reports, is all in all absolutely unacceptable and instills distrust. This further shows incompetency of the agency/ agencies preparing this report.

Conclusion: *This project's initial study needs to expand beyond CEQA for approval from the public. The limited scope of CEQA has failed to address the following concerns we have:*

- *Health hazards due to EMF levels.- This is by far the gravest concern and CEQA is clearly not qualified to study that.*
- *Reduced property values- several references provided below.*
- *Loss of Aesthetic appeal for potential real estate buyers/ new and current businesses.*
- *Increase in audible noise levels during and post construction, which is already high in the area with presence of railway line and air traffic route.*
- *Increased fire hazard/ risk of other accidents.*
- *Induced current on railway lines with close proximity/ corona effect- CEQA report did not clearly address this for a 115KV line.*
- *Economic effect on the community from small to larger scale based on all of the above.*

*We demand further investigation and revisit other routes or proposals to resolve the power needs of the city. We have to ensure our and our kids' health is not at stake in the name of development and infrastructure and are not in agreement for this project to move forward****. We cannot approve this to move forward as of now given the lack of study and absence of a satisfactory solution/ mitigation provided in favor/ assurance to public health.***

Additional References:

Research on effects of EMF on humans:

1. https://www.ncbi.nlm.nih.gov/pmc/articles/PMC6025786/

This research reinforces the concerns of EMF exposure effect on human health.

2. https://www.epa.gov/radtown/electric-and-magnetic-fields-power-lines

This resource suggests taking precautions and keeping distance or limiting exposure. Residents would no longer have either of these two options per the current proposals if they are living there 24-7.

What You Can Do

If you are concerned about possible health risks from electric and magnetic fields, you can:

- **Increase the distance between yourself and the source.** The greater the distance between you and the source of EMF, the lower your exposure.
- **Limit the time spent around the source.** The less time you spend near EMF, the lower your exposure.

3. ***https://www.fastexpert.com/blog/should-i-buy-a-house-near-power-lines/***

These are points of view from a real estate expert who clearly states that property value declines proportionately to the distance of the property from high tension lines. People have apprehensions whether or not research clearly defines the risk. Potential buyers might have low priority for a property too close to a high tension power line.

4. https://orchard.com/blog/posts/power-lines-and-property-value

Another research on real estate values lowered due to high tension power lines proximity.

Regards,
Manoj

Email: NRS-KRS 115 kV T-Line

From: Anupama Lolage-Baheti <anupama@gmail.com>
Sent: Friday, August 30, 2024 11:12 AM
To: NRS-KRS Project; mayorandcouncil@santaclaraca.gov; info@siliconvalleypower.com; planningcommission@santaclaraca.gov; manager@santaclaraca.gov; AJackman@santaclaraca.gov
Subject: Concerns Regarding Upcoming High Power Electric Wire Poles in Our Community for the upcoming SVP project connecting the Northern Receiving Station NRS to Kifer receiving station (KRS)- NRS-KRS 115kV Transmission Line Project

To Whomsoever it may concern,
We are residents of Santa Clara that will be negatively impacted by the "NRS-KRS 115kV Transmission Line Project". We have collectively reviewed the draft Initial Study/ Mitigated Negative declaration for "NRS-KRS 115kV Transmission Line Project" from July 2024. After reviewing this report and also attending the virtual and in person meetings, here are some references to emphasize our various concerns.
Reference #1 : CEQA's reporting includes these State reviewing agencies: California Air Resources Board (ARB), California Department of Fish and Wildlife, Bay Delta Region 3 (CDFW), California Department of Forestry and Fire Protection (CAL FIRE), California Department of Parks and Recreation, California Department of Toxic Substances Control (DTSC), California Department of Transportation, District 4 (DOT), California Department of Transportation, Division of Aeronautics (DOT), California Department of Transportation, Division of Transportation Planning (DOT), California Department of Water Resources (DWR), California Energy Commission, California Highway Patrol (CHP), California Native American Heritage Commission (NAHC), California Natural Resources Agency, California Public Utilities Commission (CPUC), California Regional Water Quality Control Board, San Francisco Bay Region 2 (RWQCB), Office of Historic Preservation, State Water Resources Control Board, Division of Drinking Water.
Personal observation#1 : None of these agencies has any association with human health. CEQA reporting is not qualified enough to force the public to compromise on health concerns. Other agencies need to be involved to review this proposal, that are qualified to study the effect on " humans", not just wildlife and vegetation, or " environment. The checklist is completely devoid of our gravest humanitarian concerns. It is quite shocking that the project has not included any study to understand the potential impact of EMF waves on human lives, given that the transmission lines are potentially less than 60 feet from the closest dwellings. The city of Santa Clara needs to step in and have third party/ independent studies completed in favor of human health.

Reference #2: Page 41 of report- Section 4.15. Electric and Magnetic Fields summary.
Personal observation#2 : This consideration was completely absent earlier. Only after the residents raised their voices, this section was added. To our greatest disappointment, this section is copied over from an older report on the "South Loop Reconfiguration Project" from 2020. One would have expected that a new study would have been conducted for a project this size. The lack of due diligence and ignorance towards the specifics of this project are apparent and not acceptable. In fact we have found several sections of this older report as being reused across the entire report.
The EMP map shared during the in person meeting had several flaws and we would like to question the viability of the study that was completed. What time of the day was the study completed and on what models were the values based on since these were done on assumption for the EMF values that would be there once the project is complete. Since we have seen the several sections of the report redundantly copied over from other reports, we would like a more detailed analysis of this report.
Regarding EMF concerns for human health, there are plenty of scientific studies that do indicate the grave concern on human health with EMF exposures and we cannot ignore this aspect. Here is a reference to an article and there are plenty of articles listed here under references:

https://psc.wi.gov/Documents/Brochures/EMF.pdf

There are not enough references listed in the draft report provided to us, and the explanation provided seems to be conveniently using studies that prove otherwise. This needs more investigation and references. The solution provided as raising the height of the poles and increasing the distance is non-existent. It was confirmed during the in person meeting that the design will not be altered and the height was already designed as required according to the SVP team present there. It seems that the preparers of this report did not even read the report after copying pasting from the old report as evident in the list of proposed solutions is not applicable here.
The live presentation on August 22nd showed the comparison of EMF values of household objects as a means to show that everyday household items carry a similar range of mG(milli Gauss) units. This comparison was inherently flawed since it mentioned that the household devices were producing those level at 1 feet while those indicated for 115KVf lines were at 60 feet. further these household devices do not operate 24X7 similar to the transmission lines.
There were a lot of citations of reports showcasing that no clear proof of EMF to human health exists but we would like to also point out certain states like Connecticut Department of Public Health have cited reports that have shown an increased incidence of childhood leukemia(Blood cancer) at avg exposure of only 3 mG. Also they have called out that some utility workers exposed to high levels of emf have increase risks of Lur Gehrig's disease.
They also call out that most impacts of EMF from high voltage lines dissipate at ~300 feet.
These are available on Page 2 & Page 3 of this report: https://portal.ct.gov/-/media/departments-and-agencies/dph/dph/environmental_health/eoha/pdf/emffactsheet2008pdf.pdf
This report has citations from WHO , National Institute of Environmental Health Sciences and California Department of Health Services.
https://www.niehs.nih.gov/sites/default/files/health/materials/electric_and_magnetic_fields_associated_with_the_use_of_electric_power_questions_and_answers_english_508.pdf
Some other questions around the EMF study map shared during presentation on Aug 22 2024:
1. Have you conducted an existing EMF study to identify the current value of the community ?
2. Are your emf study values based on the cumulative, or interference of existing emf and potential emf.
3. Emf value was calculated based on existing studies. What was the delta between mathematical modeling and actual values (from existing structures).
4. What is the delta between underground and overhead structures' emf values?
5. Can you provide the same for Route options B and C?
6. What happens when electrification of rail lines happens- as this is already planned for the future? Have you potentially considered the cumulative EMF effect in coexistence of the high power lines and with railway lines' electrification? Will the EMF values not be much higher then?
7. Can you share the mathematical modeling maps of Emf for 115k, 230k and the next two higher values of the power line ?
8. Can you share Emf maps from existing structures of 115k, 230 k and the next 2 higher values of the power line?
9. Please share any emf related information that you have especially if it contains assumptions for any calculations so we can understand the effects of current project and future projects.
10. Why does the electric pole structure proposed have wider diameter at the top? Can you share the design of the top of the pole ? Can it be extended by adding another section by bolting, welding or any other method? If so, what extra voltage can be added to the line?
11. what is the proposed power consumption of 95054 zip code for the next 5, 10 and 15 years in the master plan ?
Reference #3
Page 174- Section 5.21- Corona and induced current effect:
Personal observation#3
The railway line's proximity to the proposed high transmission lines is very concerning. The centerline distance from proposed lines to railway line is aproximately 50 feet per google maps with some margin for

error. As per the report there are no Corona rings proposed for the 115KV lines. There seems to be negligence in design in consideration of the hazards posed by these high voltage lines as Corona effect can transfer current to railway lines. All the residents are at a high risk of accidental hazards given the proximity of the railway line, this project is adding on to the hazards. This section is only stating information about what Corona effect is, as may be required by law, which by the way is again a copy paste from an old report. The only concern discussed in more depth is the audible noise level. The concerns are presented to imply that this is not significant by stating that 115KV lines pose less than significant risk.

Reference #4: Post meeting material from March 19th 2024
@https://santaclara.legistar.com/LegislationDetail.aspx?ID=6582415&GUID=E6E14646-3CF7-4D15-BB98-F18580696012&Options=&Search=
Personal observation#4: At surface level, it looks like Option #A was selected only based on Cost perspective, without any consideration to human health, young children, property values, Corona effect, long term sustainability perspective or any other factors. While its important to understand the results of CEQA study, its extremely critical to understand the negative impact of EMF on the many young children living around the proposed transmission lines. Without extensive research and study on the impact to young children and adult heath, we should not be approving such an incomplete proposal.
Page 6 of this document stated that the preferred route A cost of construction is $9.5 million. In discussions with several real estate agents in the region, I have unanimously found all to agree that the real estate values of residences in close proximity to power lines goes down. Its hard to find potential buyers and most folks refrain from buying a house too close to high power transmission lines. There are 1000 plus residences in the area affected by this project. Even if we were to make very rough assumptions, and assume minimal cost reduction in property values and take an average loss of $100,000 per property in the current year, that goes to $100,000,000 of loss of equity to the public. This is not even accounting the businesses affected by this project. This long explanation was to raise a point that if the selection of route A was saving money to the city, this is costing a huge financial loss to the public, which is not acceptable. This decrease in property values will also directly impact the tax collection by the Santa Clara Assessor and result in lower tax revenue coming into the city of Santa Clara.

Reference #5 : Page 49 of report- Figure 5.1-2. Wall separating residences and Lafayette Street.
Personal observation#5: The picture is taken conveniently from the other side of the railway line which is actually Kingsbury street, inside a private community and not Lafayette street. This is further away from the proposed SVP lines. This is very misleading; see snapshots taken from Google maps below

And this is what is included on the report:

The Mission Garden Townhome community has no walls as such and the main entry to residences face the road directly and are the most impacted. There are several other single family homes on Lafayette street with the same impact, having an entryway directly on the street. This and including other citations of reusing sections of older reports, is all in all absolutely unacceptable and instills distrust. This further shows incompetency of the agency/ agencies preparing this report.
Conclusion: This project's initial study needs to expand beyond CEQA for approval from the public. The limited scope of CEQA has failed to address the following concerns we have:
Health hazards due to EMF levels.- This is by far the gravest concern and CEQA is clearly not qualified to study that.
Reduced property values- several references provided below.
Loss of Aesthetic appeal for potential real estate buyers/ new and current businesses.
Increase in audible noise levels during and post construction, which is already high in the area with presence of railway line and air traffic route.
Increased fire hazard/ risk of other accidents.

Induced current on railway lines with close proximity/ corona effect- CEQA report did not clearly address this for a 115KV line.
Economic effect on the community from small to larger scale based on all of the above.
We demand further investigation and revisit other routes or proposals to resolve the power needs of the city. We have to ensure our and our kids' health is not at stake in the name of development and infrastructure and are not in agreement for this project to move forward. We cannot approve this to move forward as of now given the lack of study and absence of a satisfactory solution/ mitigation provided in favor/ assurance to public health.

Additional References:
Research on effects of EMF on humans:
https://www.ncbi.nlm.nih.gov/pmc/articles/PMC6025786/
This research reinforces the concerns of EMF exposure effect on human health.
https://www.epa.gov/radtown/electric-and-magnetic-fields-power-lines
This resource suggests taking precautions and keeping distance or limiting exposure. Residents would no longer have either of these two options per the current proposals if they are living there 24-7.

https://www.fastexpert.com/blog/should-i-buy-a-house-near-power-lines/
These are points of view from a real estate expert who clearly states that property value declines proportionately to the distance of the property from high tension lines. People have apprehensions whether or not research clearly defines the risk. Potential buyers might have low priority for a property too close to a high tension power line.
https://orchard.com/blog/posts/power-lines-and-property-value
Another research on real estate values lowered due to high tension power lines proximity.

Email: NRS-KRS 115 kV T-Line

From: vijay srinivasan <vsriniva@gmail.com>
Sent: Friday, August 30, 2024 10:46 AM
To: mayorandcouncil@santaclaraca.gov; AJackman@santaclaraca.gov; manager@santaclaraca.gov; planningcommission@santaclaraca.gov; info@siliconvalleypower.com; NRS-KRS Project
Subject: Concerns Regarding Upcoming High Power Electric Wire Poles in Our Community for the upcoming SVP project connecting the Northern Receiving Station NRS to Kifer receiving station (KRS)- NRS-KRS 115kV Transmission Line Project

To Whomsoever it may concern,

We are residents of Santa Clara that will be negatively impacted by the "NRS-KRS 115kV Transmission Line Project". We have collectively reviewed the draft Initial Study/ Mitigated Negative declaration for "NRS-KRS 115kV Transmission Line Project" from July 2024. After reviewing this report and also attending the virtual and in person meetings, here are some references to emphasize our various concerns.

Reference #1 : CEQA's reporting includes these State reviewing agencies: California Air Resources Board (ARB), California Department of Fish and Wildlife, Bay Delta Region 3 (CDFW), California Department of Forestry and Fire Protection (CAL FIRE), California Department of Parks and Recreation, California Department of Toxic Substances Control (DTSC), California Department of Transportation, District 4 (DOT), California Department of Transportation, Division of Aeronautics (DOT), California Department of Transportation, Division of Transportation Planning (DOT), California Department of Water Resources (DWR), California Energy Commission, California Highway Patrol (CHP), California Native American Heritage Commission (NAHC), California Natural Resources Agency, California Public Utilities Commission (CPUC), California Regional Water Quality Control Board, San Francisco Bay Region 2 (RWQCB), Office of Historic Preservation, State Water Resources Control Board, Division of Drinking Water.

Personal observation#1 : *None of these agencies has any association with human health. CEQA reporting is not qualified enough to force the public to compromise on health concerns. Other agencies need to be involved to review this proposal, that are qualified to study the effect on " humans", not just wildlife and vegetation, or " environment. The checklist is completely devoid of our gravest humanitarian concerns. It is quite shocking that the project has not included any study to understand the potential impact of EMF waves on human lives, given that the transmission lines are potentially less than 60 feet from the closest dwellings. The city of Santa Clara needs to step in and have third party/ independent studies completed in favor of human health.*

Reference #2: Page 41 of report- Section 4.15. Electric and Magnetic Fields summary.

Personal observation#2 : *This consideration was completely absent earlier. Only after the residents raised their voices, this section was added. To our greatest disappointment, this section is copied over from an older report on the "South Loop Reconfiguration Project" from 2020. One would have expected that a new study would have been conducted for a project this size. The lack of due diligence and ignorance towards the specifics of this project are apparent and not acceptable. In fact we have found several sections of this older report as being reused across the entire report.*

The EMP map shared during the in person meeting had several flaws and we would like to question the viability of the study that was completed. What time of the day was the study completed and on what models were the values based on since these were done on assumption for the EMF values that would

be there once the project is complete. Since we have seen the several sections of the report redundantly copied over from other reports, we would like a more detailed analysis of this report.

Regarding EMF concerns for human health, there are plenty of scientific studies that do indicate the grave concern on human health with EMF exposures and we cannot ignore this aspect. Here is a reference to an article and there are plenty of articles listed here under references:

https://psc.wi.gov/Documents/Brochures/EMF.pdf

There are not enough references listed in the draft report provided to us, and the explanation provided seems to be conveniently using studies that prove otherwise. This needs more investigation and references. The solution provided as raising the height of the poles and increasing the distance is non-existent. It was confirmed during the in person meeting that the design will not be altered and the height was already designed as required according to the SVP team present there. It seems that the preparers of this report did not even read the report after copying pasting from the old report as evident in the list of proposed solutions is not applicable here.

The live presentation on August 22nd showed the comparison of EMF values of household objects as a means to show that everyday household items carry a similar range of mG(milli Gauss) units. This comparison was inherently flawed since it mentioned that the household devices were producing those level at 1 feet while those indicated for 115KVf lines were at 60 feet. further these household devices do not operate 24X7 similar to the transmission lines.

There were a lot of citations of reports showcasing that no clear proof of EMF to human health exists but we would like to also point out certain states like Connecticut Department of Public Health have cited reports that have shown an increased incidence of childhood leukemia(Blood cancer) at avg exposure of only 3 mG. Also they have called out that some utility workers exposed to high levels of emf have increase risks of Lur Gehrig's disease.

They also call out that most impacts of EMF from high voltage lines dissipate at ~300 feet.

These are available on Page 2 & Page 3 of this report: https://portal.ct.gov/-/media/departments-and-agencies/dph/dph/environmental_health/eoha/pdf/emffactsheet2008pdf.pdf

This report has citations from WHO , National Institute of Environmental Health Sciences and California Department of Health Services.

https://www.niehs.nih.gov/sites/default/files/health/materials/electric_and_magnetic_fields_associated_with_the_use_of_electric_power_questions_and_answers_english_508.pdf

Some other questions around the EMF study map shared during presentation on Aug 22 2024:

1. Have you conducted an existing EMF study to identify the current value of the community ?

2. Are your emf study values based on the cumulative, or interference of existing emf and potential emf.

3. Emf value was calculated based on existing studies. What was the delta between mathematical modeling and actual values (from existing structures).

4. What is the delta between underground and overhead structures' emf values?

5. Can you provide the same for Route options B and C?

6. What happens when electrification of rail lines happens- as this is already planned for the future? Have you potentially considered the cumulative EMF effect in coexistence of the high power lines and with railway lines' electrification? Will the EMF values not be much higher then?

7. Can you share the mathematical modeling maps of Emf for 115k, 230k and the next two higher values of the power line ?

8. Can you share Emf maps from existing structures of 115k, 230 k and the next 2 higher values of the power line?

9. Please share any emf related information that you have especially if it contains assumptions for any calculations so we can understand the effects of current project and future projects.

10. Why does the electric pole structure proposed have wider diameter at the top? Can you share the design of the top of the pole ? Can it be extended by adding another section by bolting, welding or any other method? If so, what extra voltage can be added to the line?

11. what is the proposed power consumption of 95054 zip code for the next 5, 10 and 15 years in the master plan ?

Reference #3

Page 174- Section 5.21- Corona and induced current effect:

Personal observation#3

The railway line's proximity to the proposed high transmission lines is very concerning. The centerline distance from proposed lines to railway line is aproximately 50 feet per google maps with some margin for error. As per the report there are no Corona rings proposed for the 115KV lines. There seems to be negligence in design in consideration of the hazards posed by these high voltage lines as Corona effect can transfer current to railway lines. All the residents are at a high risk of accidental hazards given the proximity of the railway line, this project is adding on to the hazards. This section is only stating information about what Corona effect is, as may be required by law, which by the way is again a copy paste from an old report. The only concern discussed in more depth is the audible noise level. The concerns are presented to imply that this is not significant by stating that 115KV lines pose less than significant risk**.**

Reference #4: Post meeting material from March 19th 2024
@https://santaclara.legistar.com/LegislationDetail.aspx?ID=6582415&GUID=E6E14646-3CF7-4D15-BB98-F18580696012&Options=&Search=

Personal observation#4: At surface level, it looks like Option #A was selected only based on Cost perspective, without any consideration to human health, young children, property values, Corona effect, long term sustainability perspective or any other factors. While its important to understand the results of CEQA study, its extremely critical to understand the negative impact of EMF on the many young children living around the proposed transmission lines. Without extensive research and study on the impact to young children and adult heath, we should not be approving such an incomplete proposal.

Page 6 of this document stated that the preferred route A cost of construction is $9.5 million. In discussions with several real estate agents in the region, I have unanimously found all to agree that the real estate values of residences in close proximity to power lines goes down. Its hard to find potential buyers and most folks refrain from buying a house too close to high power transmission lines. There are 1000 plus residences in the area affected by this project. Even if we were to make very rough assumptions, and assume minimal cost reduction in property values and take an average loss of $100,000 per property in the current year, that goes to $100,000,000 of loss of equity to the public. This is not even accounting the businesses affected by this project. This long explanation was to raise a point that if the selection of route A was saving money to the city, this is costing a huge financial loss to the

public, which is not acceptable. This decrease in property values will also directly impact the tax collection by the Santa Clara Assessor and result in lower tax revenue coming into the city of Santa Clara.

Reference #5 : Page 49 of report- Figure 5.1-2. Wall separating residences and Lafayette Street.

Personal observation#5: *The picture is taken conveniently from the other side of the railway line which is actually Kingsbury street, inside a private community and not Lafayette street. This is further away from the proposed SVP lines. This is very misleading; see snapshots taken from Google maps below*

And this is what is included on the report:

Figure 5.1-2. Wall Separating Residences and Lafayette Street

Figure 5.1-2
Wall Separating Residences and Lafayette Street

The Mission Garden Townhome community has no walls as such and the main entry to residences face the road directly and are the most impacted. There are several other single family homes on Lafayette street with the same impact, having an entryway directly on the street. This and including other citations of reusing sections of older reports, is all in all absolutely unacceptable and instills distrust. This further shows incompetency of the agency/ agencies preparing this report.

Conclusion: *This project's initial study needs to expand beyond CEQA for approval from the public. The limited scope of CEQA has failed to address the following concerns we have:*

- *Health hazards due to EMF levels.- This is by far the gravest concern and CEQA is clearly not qualified to study that.*
- *Reduced property values- several references provided below.*
- *Loss of Aesthetic appeal for potential real estate buyers/ new and current businesses.*
- *Increase in audible noise levels during and post construction, which is already high in the area with presence of railway line and air traffic route.*
- *Increased fire hazard/ risk of other accidents.*
- *Induced current on railway lines with close proximity/ corona effect- CEQA report did not clearly address this for a 115KV line.*
- *Economic effect on the community from small to larger scale based on all of the above.*

*We demand further investigation and revisit other routes or proposals to resolve the power needs of the city. We have to ensure our and our kids' health is not at stake in the name of development and infrastructure and are not in agreement for this project to move forward****. We cannot approve this to move forward as of now given the lack of study and absence of a satisfactory solution/ mitigation provided in favor/ assurance to public health.***

Thanks
Vijay Srinivasan

Concerned Santa Clara resident
1881 Garzoni place
Santa Clara

Additional References:

Research on effects of EMF on humans:

1. ***https://www.ncbi.nlm.nih.gov/pmc/articles/PMC6025786/***

This research reinforces the concerns of EMF exposure effect on human health.

2. ***https://www.epa.gov/radtown/electric-and-magnetic-fields-power-lines***

This resource suggests taking precautions and keeping distance or limiting exposure. Residents would no longer have either of these two options per the current proposals if they are living there 24-7.

What You Can Do

If you are concerned about possible health risks from electric and magnetic fields, you can:

- **Increase the distance between yourself and the source.** The greater the distance between you and the source of EMF, the lower your exposure.
- **Limit the time spent around the source.** The less time you spend near EMF, the lower your exposure.

3. ***https://www.fastexpert.com/blog/should-i-buy-a-house-near-power-lines/***

These are points of view from a real estate expert who clearly states that property value declines proportionately to the distance of the property from high tension lines. People have apprehensions whether or not research clearly defines the risk. Potential buyers might have low priority for a property too close to a high tension power line.

4. ***https://orchard.com/blog/posts/power-lines-and-property-value***

Another research on real estate values lowered due to high tension power lines proximity.

Email: NRS-KRS 115 kV T-Line

From: Lini Kuriyan <linikuriyan@gmail.com>
Sent: Friday, August 30, 2024 10:14 AM
To: NRS-KRS Project; mayorandcouncil@santaclaraca.gov; info@siliconvalleypower.com; planningcommission@santaclaraca.gov; manager@santaclaraca.gov; AJackman@santaclaraca.gov
Subject: Concerns Regarding Upcoming High Power Electric Wire Poles in Our Community for the upcoming SVP project connecting the Northern Receiving Station NRS to Kifer receiving station (KRS)- NRS-KRS 115kV Transmission Line Project

To Whomsoever it may concern,

We are residents of Santa Clara that will be negatively impacted by the "NRS-KRS 115kV Transmission Line Project". We have collectively reviewed the draft Initial Study/ Mitigated Negative declaration for "NRS-KRS 115kV Transmission Line Project" from July 2024. After reviewing this report and also attending the virtual and in person meetings, here are some references to emphasize our various concerns.

Reference #1 : CEQA's reporting includes these State reviewing agencies: California Air Resources Board (ARB), California Department of Fish and Wildlife, Bay Delta Region 3 (CDFW), California Department of Forestry and Fire Protection (CAL FIRE), California Department of Parks and Recreation, California Department of Toxic Substances Control (DTSC), California Department of Transportation, District 4 (DOT), California Department of Transportation, Division of Aeronautics (DOT), California Department of Transportation, Division of Transportation Planning (DOT), California Department of Water Resources (DWR), California Energy Commission, California Highway Patrol (CHP), California Native American Heritage Commission (NAHC), California Natural Resources Agency, California Public Utilities Commission (CPUC), California Regional Water Quality Control Board, San Francisco Bay Region 2 (RWQCB), Office of Historic Preservation, State Water Resources Control Board, Division of Drinking Water.

Personal observation#1 : *None of these agencies has any association with human health. CEQA reporting is not qualified enough to force the public to compromise on health concerns. Other agencies need to be involved to review this proposal, that are qualified to study the effect on " humans", not just wildlife and vegetation, or " environment. The checklist is completely devoid of our gravest humanitarian concerns. It is quite shocking that the project has not included any study to understand the potential impact of EMF waves on human lives, given that the transmission lines are potentially less than 60 feet from the closest dwellings. The city of Santa Clara needs to step in and have third party/ independent studies completed in favor of human health.*

Reference #2: Page 41 of report- Section 4.15. Electric and Magnetic Fields summary.

Personal observation#2 : *This consideration was completely absent earlier. Only after the residents raised their voices, this section was added. To our greatest disappointment, this section is copied over from an older report on the "South Loop Reconfiguration Project" from 2020. One would have expected that a new study would have been conducted for a project this size. The lack of due diligence and ignorance towards the specifics of this project are apparent and not acceptable. In fact we have found several sections of this older report as being reused across the entire report.*

The EMP map shared during the in person meeting had several flaws and we would like to question the viability of the study that was completed. What time of the day was the study completed and on what models were the values based on since these were done on assumption for the EMF values that would

be there once the project is complete. Since we have seen the several sections of the report redundantly copied over from other reports, we would like a more detailed analysis of this report.

Regarding EMF concerns for human health, there are plenty of scientific studies that do indicate the grave concern on human health with EMF exposures and we cannot ignore this aspect. Here is a reference to an article and there are plenty of articles listed here under references:

https://psc.wi.gov/Documents/Brochures/EMF.pdf

There are not enough references listed in the draft report provided to us, and the explanation provided seems to be conveniently using studies that prove otherwise. This needs more investigation and references. The solution provided as raising the height of the poles and increasing the distance is non-existent. It was confirmed during the in person meeting that the design will not be altered and the height was already designed as required according to the SVP team present there. It seems that the preparers of this report did not even read the report after copying pasting from the old report as evident in the list of proposed solutions is not applicable here.

The live presentation on August 22nd showed the comparison of EMF values of household objects as a means to show that everyday household items carry a similar range of mG(milli Gauss) units. This comparison was inherently flawed since it mentioned that the household devices were producing those level at 1 feet while those indicated for 115KVf lines were at 60 feet. further these household devices do not operate 24X7 similar to the transmission lines.

There were a lot of citations of reports showcasing that no clear proof of EMF to human health exists but we would like to also point out certain states like Connecticut Department of Public Health have cited reports that have shown an increased incidence of childhood leukemia(Blood cancer) at avg exposure of only 3 mG. Also they have called out that some utility workers exposed to high levels of emf have increase risks of Lur Gehrig's disease.

They also call out that most impacts of EMF from high voltage lines dissipate at ~300 feet.

These are available on Page 2 & Page 3 of this report: https://portal.ct.gov/-/media/departments-and-agencies/dph/dph/environmental_health/eoha/pdf/emffactsheet2008pdf.pdf

This report has citations from WHO , National Institute of Environmental Health Sciences and California Department of Health Services.

https://www.niehs.nih.gov/sites/default/files/health/materials/electric_and_magnetic_fields_associated_with_the_use_of_electric_power_questions_and_answers_english_508.pdf

Some other questions around the EMF study map shared during presentation on Aug 22 2024:

1. Have you conducted an existing EMF study to identify the current value of the community ?

2. Are your emf study values based on the cumulative, or interference of existing emf and potential emf.

3. Emf value was calculated based on existing studies. What was the delta between mathematical modeling and actual values (from existing structures).

4. What is the delta between underground and overhead structures' emf values?

5. Can you provide the same for Route options B and C?

6. What happens when electrification of rail lines happens- as this is already planned for the future? Have you potentially considered the cumulative EMF effect in coexistence of the high power lines and with railway lines' electrification? Will the EMF values not be much higher then?

7. Can you share the mathematical modeling maps of Emf for 115k, 230k and the next two higher values of the power line ?

8. Can you share Emf maps from existing structures of 115k, 230 k and the next 2 higher values of the power line?

9. Please share any emf related information that you have especially if it contains assumptions for any calculations so we can understand the effects of current project and future projects.

10. Why does the electric pole structure proposed have wider diameter at the top? Can you share the design of the top of the pole ? Can it be extended by adding another section by bolting, welding or any other method? If so, what extra voltage can be added to the line?

11. what is the proposed power consumption of 95054 zip code for the next 5, 10 and 15 years in the master plan ?

Reference #3

Page 174- Section 5.21- Corona and induced current effect:

Personal observation#3

The railway line's proximity to the proposed high transmission lines is very concerning. The centerline distance from proposed lines to railway line is aproximately 50 feet per google maps with some margin for error. As per the report there are no Corona rings proposed for the 115KV lines. There seems to be negligence in design in consideration of the hazards posed by these high voltage lines as Corona effect can transfer current to railway lines. All the residents are at a high risk of accidental hazards given the proximity of the railway line, this project is adding on to the hazards. This section is only stating information about what Corona effect is, as may be required by law, which by the way is again a copy paste from an old report. The only concern discussed in more depth is the audible noise level. The concerns are presented to imply that this is not significant by stating that 115KV lines pose less than significant risk**.**

Reference #4: Post meeting material from March 19th 2024
@https://santaclara.legistar.com/LegislationDetail.aspx?ID=6582415&GUID=E6E14646-3CF7-4D15-BB98-F18580696012&Options=&Search=

Personal observation#4: At surface level, it looks like Option #A was selected only based on Cost perspective, without any consideration to human health, young children, property values, Corona effect, long term sustainability perspective or any other factors. While its important to understand the results of CEQA study, its extremely critical to understand the negative impact of EMF on the many young children living around the proposed transmission lines. Without extensive research and study on the impact to young children and adult heath, we should not be approving such an incomplete proposal.

Page 6 of this document stated that the preferred route A cost of construction is $9.5 million. In discussions with several real estate agents in the region, I have unanimously found all to agree that the real estate values of residences in close proximity to power lines goes down. Its hard to find potential buyers and most folks refrain from buying a house too close to high power transmission lines. There are 1000 plus residences in the area affected by this project. Even if we were to make very rough assumptions, and assume minimal cost reduction in property values and take an average loss of $100,000 per property in the current year, that goes to $100,000,000 of loss of equity to the public. This is not even accounting the businesses affected by this project. This long explanation was to raise a point that if the selection of route A was saving money to the city, this is costing a huge financial loss to the

public, which is not acceptable. This decrease in property values will also directly impact the tax collection by the Santa Clara Assessor and result in lower tax revenue coming into the city of Santa Clara.

Reference #5 : Page 49 of report- Figure 5.1-2. Wall separating residences and Lafayette Street.

Personal observation#5: *The picture is taken conveniently from the other side of the railway line which is actually Kingsbury street, inside a private community and not Lafayette street. This is further away from the proposed SVP lines. This is very misleading; see snapshots taken from Google maps below*

And this is what is included on the report:

Figure 5.1-2. Wall Separating Residences and Lafayette Street

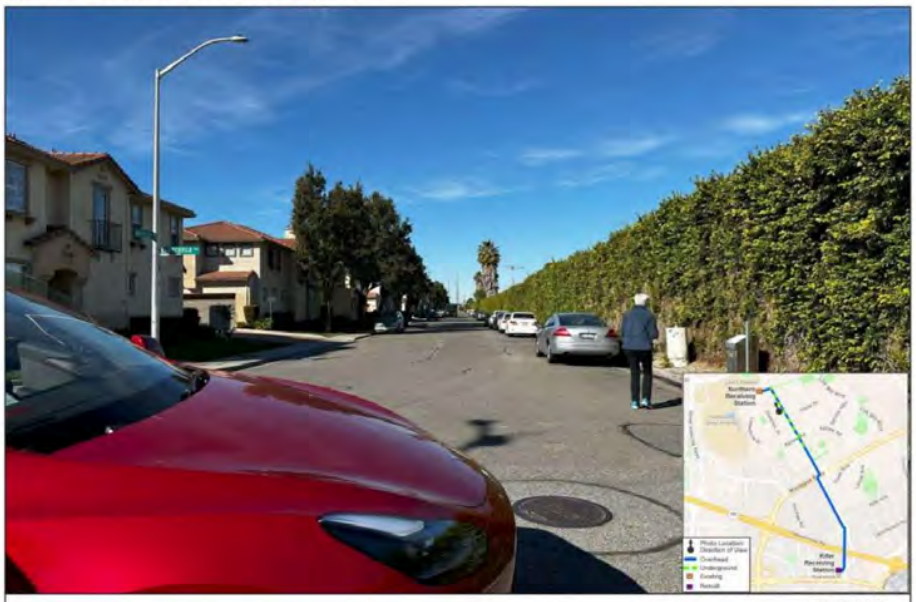

Figure 5.1-2
Wall Separating Residences and Lafayette Street

The Mission Garden Townhome community has no walls as such and the main entry to residences face the road directly and are the most impacted. There are several other single family homes on Lafayette street with the same impact, having an entryway directly on the street. This and including other citations of reusing sections of older reports, is all in all absolutely unacceptable and instills distrust. This further shows incompetency of the agency/ agencies preparing this report.

Conclusion: *This project's initial study needs to expand beyond CEQA for approval from the public. The limited scope of CEQA has failed to address the following concerns we have:*

- *Health hazards due to EMF levels.- This is by far the gravest concern and CEQA is clearly not qualified to study that.*
- *Reduced property values- several references provided below.*
- *Loss of Aesthetic appeal for potential real estate buyers/ new and current businesses.*
- *Increase in audible noise levels during and post construction, which is already high in the area with presence of railway line and air traffic route.*
- *Increased fire hazard/ risk of other accidents.*
- *Induced current on railway lines with close proximity/ corona effect- CEQA report did not clearly address this for a 115KV line.*
- *Economic effect on the community from small to larger scale based on all of the above.*

*We demand further investigation and revisit other routes or proposals to resolve the power needs of the city. We have to ensure our and our kids' health is not at stake in the name of development and infrastructure and are not in agreement for this project to move forward****. We cannot approve this to move forward as of now given the lack of study and absence of a satisfactory solution/ mitigation provided in favor/ assurance to public health.***

Additional References:

Research on effects of EMF on humans:

1. https://www.ncbi.nlm.nih.gov/pmc/articles/PMC6025786/

This research reinforces the concerns of EMF exposure effect on human health.

2. https://www.epa.gov/radtown/electric-and-magnetic-fields-power-lines

This resource suggests taking precautions and keeping distance or limiting exposure. Residents would no longer have either of these two options per the current proposals if they are living there 24-7.

What You Can Do

If you are concerned about possible health risks from electric and magnetic fields, you can:

- **Increase the distance between yourself and the source.** The greater the distance between you and the source of EMF, the lower your exposure.
- **Limit the time spent around the source.** The less time you spend near EMF, the lower your exposure.

3. ***https://www.fastexpert.com/blog/should-i-buy-a-house-near-power-lines/***

These are points of view from a real estate expert who clearly states that property value declines proportionately to the distance of the property from high tension lines. People have apprehensions whether or not research clearly defines the risk. Potential buyers might have low priority for a property too close to a high tension power line.

4. https://orchard.com/blog/posts/power-lines-and-property-value

Another research on real estate values lowered due to high tension power lines proximity.

Lini Kuriyan
4479 Moulin Pl, Santa Clara - 95054
408 368 9436
Mission Gardens

Email: NRS-KRS 115 kV T-Line

From: Olivier Madec <omadec@gmail.com>
Sent: Thursday, August 29, 2024 9:42 PM
To: NRS-KRS Project
Cc: O M
Subject: NRS-KRS
Attachments: Capture.JPG

To Whom it may concern,

My name is Olivier Madec, I am a Santa Clara resident and property owner for more than 12 years.

I am sending an email, since it seems that my comments from the first public meeting were not recorded.

I am against this project for the following reasons:

1. Health reasons, the magnetic fields from the power lines are not negligible.
2. High voltage lines are dangerous, see attached a picture I took earlier this month (8/1/24) of a fire after the transformer blew up on Agnew road in the new datacenter with new electrical lines. The proposed location has already an existing gas line underground and the train track is very close by. The public scoping report in " 3. SUMMARY OF SCOPING COMMENTS " states: "The proposed Project route was chosen because, among other reasons, it had fewer impacts" I don't think that routing the line close to a gas line or train track should be taken lightly.
3. The aesthetics, power lines are ugly and a 15 foot wall and small trees cannot hide them. The wall from the MDN pdf page 49, Figure 5.1-2. Wall Separating Residences and Lafayette Street. Doesn't exist between the residences on Bassett street and Lafayette street.
4. A consequence of points 1, 2 and 3, is the loss of property values.

The subject of SVP electrical production being at capacity was raised during a planning commission meeting by a new commissioner during a data center permit review, but the permit has been approved anyway. This project was presented to the city council as fulfilling commitments already approved by the city and other options are not doable. Why put Santa Clara residents in such a position?

The route going through industrial areas and next to the creek is a better option as it's not next to residential areas.

Sincerely,
Olivier Madec

Email: NRS-KRS 115 kV T-Line

From: Suneet Bisht <suneet.bisht@gmail.com>
Sent: Friday, August 30, 2024 10:02 AM
To: NRS-KRS Project; mayorandcouncil@santaclaraca.gov; info@siliconvalleypower.com; planningcommission@santaclaraca.gov; manager@santaclaraca.gov; AJackman@santaclaraca.gov
Subject: Concerns Regarding Upcoming High Power Electric Wire Poles in Our Community for the upcoming SVP project connecting the Northern Receiving Station NRS to Kifer receiving station (KRS)- NRS-KRS 115kV Transmission Line Project

To Whomsoever it may concern,

We are residents of Santa Clara that will be negatively impacted by the "NRS-KRS 115kV Transmission Line Project". We have collectively reviewed the draft Initial Study/ Mitigated Negative declaration for "NRS-KRS 115kV Transmission Line Project" from July 2024. After reviewing this report and also attending the virtual and in person meetings, here are some references to emphasize our various concerns.

Reference #1 : CEQA's reporting includes these State reviewing agencies: California Air Resources Board (ARB), California Department of Fish and Wildlife, Bay Delta Region 3 (CDFW), California Department of Forestry and Fire Protection (CAL FIRE), California Department of Parks and Recreation, California Department of Toxic Substances Control (DTSC), California Department of Transportation, District 4 (DOT), California Department of Transportation, Division of Aeronautics (DOT), California Department of Transportation, Division of Transportation Planning (DOT), California Department of Water Resources (DWR), California Energy Commission, California Highway Patrol (CHP), California Native American Heritage Commission (NAHC), California Natural Resources Agency, California Public Utilities Commission (CPUC), California Regional Water Quality Control Board, San Francisco Bay Region 2 (RWQCB), Office of Historic Preservation, State Water Resources Control Board, Division of Drinking Water.

Personal observation#1 : *None of these agencies has any association with human health. CEQA reporting is not qualified enough to force the public to compromise on health concerns. Other agencies need to be involved to review this proposal, that are qualified to study the effect on " humans", not just wildlife and vegetation, or " environment. The checklist is completely devoid of our gravest humanitarian concerns. It is quite shocking that the project has not included any study to understand the potential impact of EMF waves on human lives, given that the transmission lines are potentially less than 60 feet from the closest dwellings. The city of Santa Clara needs to step in and have third party/ independent studies completed in favor of human health.*

Reference #2: Page 41 of report- Section 4.15. Electric and Magnetic Fields summary.

Personal observation#2 : *This consideration was completely absent earlier. Only after the residents raised their voices, this section was added. To our greatest disappointment, this section is copied over from an older report on the "South Loop Reconfiguration Project" from 2020. One would have expected that a new study would have been conducted for a project this size. The lack of due diligence and ignorance towards the specifics of this project are apparent and not acceptable. In fact we have found several sections of this older report as being reused across the entire report.*

The EMP map shared during the in person meeting had several flaws and we would like to question the viability of the study that was completed. What time of the day was the study completed and on what models were the values based on since these were done on assumption for the EMF values that would

be there once the project is complete. Since we have seen the several sections of the report redundantly copied over from other reports, we would like a more detailed analysis of this report.

Regarding EMF concerns for human health, there are plenty of scientific studies that do indicate the grave concern on human health with EMF exposures and we cannot ignore this aspect. Here is a reference to an article and there are plenty of articles listed here under references:

https://psc.wi.gov/Documents/Brochures/EMF.pdf

There are not enough references listed in the draft report provided to us, and the explanation provided seems to be conveniently using studies that prove otherwise. This needs more investigation and references. The solution provided as raising the height of the poles and increasing the distance is non-existent. It was confirmed during the in person meeting that the design will not be altered and the height was already designed as required according to the SVP team present there. It seems that the preparers of this report did not even read the report after copying pasting from the old report as evident in the list of proposed solutions is not applicable here.

The live presentation on August 22nd showed the comparison of EMF values of household objects as a means to show that everyday household items carry a similar range of mG(milli Gauss) units. This comparison was inherently flawed since it mentioned that the household devices were producing those level at 1 feet while those indicated for 115KVf lines were at 60 feet. further these household devices do not operate 24X7 similar to the transmission lines.

There were a lot of citations of reports showcasing that no clear proof of EMF to human health exists but we would like to also point out certain states like Connecticut Department of Public Health have cited reports that have shown an increased incidence of childhood leukemia(Blood cancer) at avg exposure of only 3 mG. Also they have called out that some utility workers exposed to high levels of emf have increase risks of Lur Gehrig's disease.

They also call out that most impacts of EMF from high voltage lines dissipate at ~300 feet.

These are available on Page 2 & Page 3 of this report: https://portal.ct.gov/-/media/departments-and-agencies/dph/dph/environmental_health/eoha/pdf/emffactsheet2008pdf.pdf

This report has citations from WHO , National Institute of Environmental Health Sciences and California Department of Health Services.

https://www.niehs.nih.gov/sites/default/files/health/materials/electric_and_magnetic_fields_associated_with_the_use_of_electric_power_questions_and_answers_english_508.pdf

Reference #3

Page 174- Section 5.21- Corona and induced current effect:

Personal observation#3

The railway line's proximity to the proposed high transmission lines is very concerning. The centerline distance from proposed lines to railway line is aproximately 50 feet per google maps with some margin for error. As per the report there are no Corona rings proposed for the 115KV lines. There seems to be negligence in design in consideration of the hazards posed by these high voltage lines as Corona effect can transfer current to railway lines. All the residents are at a high risk of accidental hazards given the proximity of the railway line, this project is adding on to the hazards. This section is only stating information about what Corona effect is, as may be required by law, which by the way is again a copy paste from an old report. The only concern discussed in more depth is the audible noise level. The concerns are presented to imply that this is not significant by stating that 115KV lines pose less than significant risk**.**

Reference #4: Post meeting material from March 19th 2024 @https://santaclara.legistar.com/LegislationDetail.aspx?ID=6582415&GUID=E6E14646-3CF7-4D15-BB98-F18580696012&Options=&Search=

Personal observation#4: At surface level, it looks like Option #A was selected only based on Cost perspective, without any consideration to human health, young children, property values, Corona effect, long term sustainability perspective or any other factors. While its important to understand the results of CEQA study, its extremely critical to understand the negative impact of EMF on the many young children living around the proposed transmission lines. Without extensive research and study on the impact to young children and adult heath, we should not be approving such an incomplete proposal.

Page 6 of this document stated that the preferred route A cost of construction is $9.5 million. In discussions with several real estate agents in the region, I have unanimously found all to agree that the real estate values of residences in close proximity to power lines goes down. Its hard to find potential buyers and most folks refrain from buying a house too close to high power transmission lines. There are 1000 plus residences in the area affected by this project. Even if we were to make very rough assumptions, and assume minimal cost reduction in property values and take an average loss of $100,000 per property in the current year, that goes to $100,000,000 of loss of equity to the public. This is not even accounting the businesses affected by this project. This long explanation was to raise a point that if the selection of route A was saving money to the city, this is costing a huge financial loss to the public, which is not acceptable. This decrease in property values will also directly impact the tax collection by the Santa Clara Assessor and result in lower tax revenue coming into the city of Santa Clara.

Reference #5 : Page 49 of report- Figure 5.1-2. Wall separating residences and Lafayette Street.

Personal observation#5: *The picture is taken conveniently from the other side of the railway line which is actually Kingsbury street, inside a private community and not Lafayette street. This is further away from the proposed SVP lines. This is very misleading; see snapshots taken from Google maps below*

And this is what is included on the report:

NRS-KRS 115kV Transmission Line Project 5.1. Aesthetics

Figure 5.1-2. Wall Separating Residences and Lafayette Street

Figure 5.1-2
Wall Separating Residences and Lafayette Street

July 2024 5.1-5 Administrative Draft MND/IS

The Mission Garden Townhome community has no walls as such and the main entry to residences face the road directly and are the most impacted. There are several other single family homes on Lafayette

street with the same impact, having an entryway directly on the street. This and including other citations of reusing sections of older reports, is all in all absolutely unacceptable and instills distrust. This further shows incompetency of the agency/ agencies preparing this report.

Conclusion: *This project's initial study needs to expand beyond CEQA for approval from the public. The limited scope of CEQA has failed to address the following concerns we have:*

- *Health hazards due to EMF levels.- This is by far the gravest concern and CEQA is clearly not qualified to study that.*
- *Reduced property values- several references provided below.*
- *Loss of Aesthetic appeal for potential real estate buyers/ new and current businesses.*
- *Increase in audible noise levels during and post construction, which is already high in the area with presence of railway line and air traffic route.*
- *Increased fire hazard/ risk of other accidents.*
- *Induced current on railway lines with close proximity/ corona effect- CEQA report did not clearly address this for a 115KV line.*
- *Economic effect on the community from small to larger scale based on all of the above.*

We demand further investigation and revisit other routes or proposals to resolve the power needs of the city. We have to ensure our and our kids' health is not at stake in the name of development and infrastructure and are not in agreement for this project to move forward. ***We cannot approve this to move forward as of now given the lack of study and absence of a satisfactory solution/ mitigation provided in favor/ assurance to public health.***

Additional References:

Research on effects of EMF on humans:

1. ***https://www.ncbi.nlm.nih.gov/pmc/articles/PMC6025786/***

This research reinforces the concerns of EMF exposure effect on human health.

2. ***https://www.epa.gov/radtown/electric-and-magnetic-fields-power-lines***

This resource suggests taking precautions and keeping distance or limiting exposure. Residents would no longer have either of these two options per the current proposals if they are living there 24-7.

What You Can Do

If you are concerned about possible health risks from electric and magnetic fields, you can:

- **Increase the distance between yourself and the source.** The greater the distance between you and the source of EMF, the lower your exposure.
- **Limit the time spent around the source.** The less time you spend near EMF, the lower your exposure.

3. ***https://www.fastexpert.com/blog/should-i-buy-a-house-near-power-lines/***

These are points of view from a real estate expert who clearly states that property value declines proportionately to the distance of the property from high tension lines. People have apprehensions whether or not research clearly defines the risk. Potential buyers might have low priority for a property too close to a high tension power line.

4. ***https://orchard.com/blog/posts/power-lines-and-property-value***

Another research on real estate values lowered due to high tension power lines proximity

Thank you for your consideration,

Suneet Bisht

Email: NRS-KRS 115 kV T-Line

From: MANJUNATH JAGANNATHARAO <manjunath_tj@hotmail.com>
Sent: Friday, August 30, 2024 10:02 AM
To: NRS-KRS Project; mayorandcouncil@santaclaraca.gov; info@siliconvalleypower.com; planningcommission@santaclaraca.gov; manager@santaclaraca.gov; AJackman@santaclaraca.gov
Subject: Fw: Concerns Regarding Upcoming High Power Electric Wire Poles in Our Community for the upcoming SVP project connecting the Northern Receiving Station NRS to Kifer receiving station (KRS)- NRS-KRS 115kV Transmission Line Projection in

To Whomsoever it may concern,
We are residents of Santa Clara that will be negatively impacted by the "NRS-KRS 115kV Transmission Line Project". We have collectively reviewed the draft Initial Study/ Mitigated Negative declaration for "NRS-KRS 115kV Transmission Line Project" from July 2024. After reviewing this report and also attending the virtual and in person meetings, here are some references to emphasize our various concerns.

Reference #1 : CEQA's reporting includes these State reviewing agencies: California Air Resources Board (ARB), California Department of Fish and Wildlife, Bay Delta Region 3 (CDFW), California Department of Forestry and Fire Protection (CAL FIRE), California Department of Parks and Recreation, California Department of Toxic Substances Control (DTSC), California Department of Transportation, District 4 (DOT), California Department of Transportation, Division of Aeronautics (DOT), California Department of Transportation, Division of Transportation Planning (DOT), California Department of Water Resources (DWR), California Energy Commission, California Highway Patrol (CHP), California Native American Heritage Commission (NAHC), California Natural Resources Agency, California Public Utilities Commission (CPUC), California Regional Water Quality Control Board, San Francisco Bay Region 2 (RWQCB), Office of Historic Preservation, State Water Resources Control Board, Division of Drinking Water.

Personal observation#1 : *None of these agencies has any association with human health. CEQA reporting is not qualified enough to force the public to compromise on health concerns. Other agencies need to be involved to review this proposal, that are qualified to study the effect on " humans", not just wildlife and vegetation, or " environment. The checklist is completely devoid of our gravest humanitarian concerns. It is quite shocking that the project has not included any study to understand the potential impact of EMF waves on human lives, given that the transmission lines are potentially less than 60 feet from the closest dwellings. The city of Santa Clara needs to step in and have third party/ independent studies completed in favor of human health.*

Reference #2: Page 41 of report- Section 4.15. Electric and Magnetic Fields summary.

Personal observation#2 : *This consideration was completely absent earlier. Only after the residents raised their voices, this section was added. To our greatest disappointment, this section is copied over from an older report on the "South Loop Reconfiguration Project" from 2020. One would have expected that a new study would have been conducted for a project this size. The lack of due diligence and ignorance towards the specifics of this project are apparent and not acceptable. In fact we have found several sections of this older report as being reused across the entire report.*

The EMP map shared during the in person meeting had several flaws and we would like to question the viability of the study that was completed. What time of the day was the study completed and on what models were the values based on since these were done on assumption for the EMF values that would

be there once the project is complete. Since we have seen the several sections of the report redundantly copied over from other reports, we would like a more detailed analysis of this report.

Regarding EMF concerns for human health, there are plenty of scientific studies that do indicate the grave concern on human health with EMF exposures and we cannot ignore this aspect. Here is a reference to an article and there are plenty of articles listed here under references:

https://psc.wi.gov/Documents/Brochures/EMF.pdf

There are not enough references listed in the draft report provided to us, and the explanation provided seems to be conveniently using studies that prove otherwise. This needs more investigation and references. The solution provided as raising the height of the poles and increasing the distance is non-existent. It was confirmed during the in person meeting that the design will not be altered and the height was already designed as required according to the SVP team present there. It seems that the preparers of this report did not even read the report after copying pasting from the old report as evident in the list of proposed solutions is not applicable here.

The live presentation on August 22nd showed the comparison of EMF values of household objects as a means to show that everyday household items carry a similar range of mG(milli Gauss) units. This comparison was inherently flawed since it mentioned that the household devices were producing those level at 1 feet while those indicated for 115KVf lines were at 60 feet. further these household devices do not operate 24X7 similar to the transmission lines.

There were a lot of citations of reports showcasing that no clear proof of EMF to human health exists but we would like to also point out certain states like Connecticut Department of Public Health have cited reports that have shown an increased incidence of childhood leukemia(Blood cancer) at avg exposure of only 3 mG. Also they have called out that some utility workers exposed to high levels of emf have increase risks of Lur Gehrig's disease.

They also call out that most impacts of EMF from high voltage lines dissipate at ~300 feet.

These are available on Page 2 & Page 3 of this report: https://portal.ct.gov/-/media/departments-and-agencies/dph/dph/environmental_health/eoha/pdf/emffactsheet2008pdf.pdf
This report has citations from WHO , National Institute of Environmental Health Sciences and California Department of Health Services.

https://www.niehs.nih.gov/sites/default/files/health/materials/electric_and_magnetic_fields_associated_with_the_use_of_electric_power_questions_and_answers_english_508.pdf
Some other questions around the EMF study map shared during presentation on Aug 22 2024:

1. Have you conducted an existing EMF study to identify the current value of the community ?

2. Are your emf study values based on the cumulative, or interference of existing emf and potential emf.

3. Emf value was calculated based on existing studies. What was the delta between mathematical modeling and actual values (from existing structures).

4. What is the delta between underground and overhead structures' emf values?

5. Can you provide the same for Route options B and C?

6. What happens when electrification of rail lines happens- as this is already planned for the future? Have you potentially considered the cumulative EMF effect in coexistence of the high power lines and with railway lines' electrification? Will the EMF values not be much higher then?

7. Can you share the mathematical modeling maps of Emf for 115k, 230k and the next two higher values of the power line ?

8. Can you share Emf maps from existing structures of 115k, 230 k and the next 2 higher values of the power line?

9. Please share any emf related information that you have especially if it contains assumptions for any calculations so we can understand the effects of current project and future projects.

10. Why does the electric pole structure proposed have wider diameter at the top? Can you share the design of the top of the pole ? Can it be extended by adding another section by bolting, welding or any other method? If so, what extra voltage can be added to the line?

11. what is the proposed power consumption of 95054 zip code for the next 5, 10 and 15 years in the master plan ?

Reference #3

Page 174- Section 5.21- Corona and induced current effect:

Personal observation#3

The railway line's proximity to the proposed high transmission lines is very concerning. The centerline distance from proposed lines to railway line is aproximately 50 feet per google maps with some margin for error. As per the report there are no Corona rings proposed for the 115KV lines. There seems to be negligence in design in consideration of the hazards posed by these high voltage lines as Corona effect can transfer current to railway lines. All the residents are at a high risk of accidental hazards given the proximity of the railway line, this project is adding on to the hazards. This section is only stating information about what Corona effect is, as may be required by law, which by the way is again a copy paste from an old report. The only concern discussed in more depth is the audible noise level. The concerns are presented to imply that this is not significant by stating that 115KV lines pose less than significant risk**.**

Reference #4: Post meeting material from March 19th 2024
@https://santaclara.legistar.com/LegislationDetail.aspx?ID=6582415&GUID=E6E14646-3CF7-4D15-BB98-F18580696012&Options=&Search=
Personal observation#4: At surface level, it looks like Option #A was selected only based on Cost perspective, without any consideration to human health, young children, property values, Corona effect, long term sustainability perspective or any other factors. While its important to understand the results of CEQA study, its extremely critical to understand the negative impact of EMF on the many young children living around the proposed transmission lines. Without extensive research and study on the impact to young children and adult heath, we should not be approving such an incomplete proposal.

Page 6 of this document stated that the preferred route A cost of construction is $9.5 million. In discussions with several real estate agents in the region, I have unanimously found all to agree that the real estate values of residences in close proximity to power lines goes down. Its hard to find potential buyers and most folks refrain from buying a house too close to high power transmission lines. There are 1000 plus residences in the area affected by this project. Even if we were to make very rough assumptions, and assume minimal cost reduction in property values and take an average loss of $100,000 per property in the current year, that goes to $100,000,000 of loss of equity to the public. This is not even accounting the businesses affected by this project. This long explanation was to raise a point that if the selection of route A was saving money to the city, this is costing a huge financial loss to the public, which is not acceptable. This decrease in property values will also directly impact the tax collection by the Santa Clara Assessor and result in lower tax revenue coming into the city of Santa Clara.

Reference #5 : Page 49 of report- Figure 5.1-2. Wall separating residences and Lafayette Street.

Personal observation#5: *The picture is taken conveniently from the other side of the railway line which is actually Kingsbury street, inside a private community and not Lafayette street. This is further away from the proposed SVP lines. This is very misleading; see snapshots taken from Google maps below*

-

And this is what is included on the report:

The Mission Garden Townhome community has no walls as such and the main entry to residences face the road directly and are the most impacted. There are several other single family homes on Lafayette street with the same impact, having an entryway directly on the street. This and including other citations of reusing sections of older reports, is all in all absolutely unacceptable and instills distrust. This further shows incompetency of the agency/ agencies preparing this report.

Conclusion: *This project's initial study needs to expand beyond CEQA for approval from the public. The limited scope of CEQA has failed to address the following concerns we have:*

- *Health hazards due to EMF levels.- This is by far the gravest concern and CEQA is clearly not qualified to study that.*
- *Reduced property values- several references provided below.*
- *Loss of Aesthetic appeal for potential real estate buyers/ new and current businesses.*
- *Increase in audible noise levels during and post construction, which is already high in the area with presence of railway line and air traffic route.*
- *Increased fire hazard/ risk of other accidents.*
- *Induced current on railway lines with close proximity/ corona effect- CEQA report did not clearly address this for a 115KV line.*
- *Economic effect on the community from small to larger scale based on all of the above.*

*We demand further investigation and revisit other routes or proposals to resolve the power needs of the city. We have to ensure our and our kids' health is not at stake in the name of development and infrastructure and are not in agreement for this project to move forward**. We cannot approve this to move forward as of now given the lack of study and absence of a satisfactory solution/ mitigation provided in favor/ assurance to public health.***

Additional References:

Research on effects of EMF on humans:

1. ***https://www.ncbi.nlm.nih.gov/pmc/articles/PMC6025786/***

This research reinforces the concerns of EMF exposure effect on human health.

2. ***https://www.epa.gov/radtown/electric-and-magnetic-fields-power-lines***

This resource suggests taking precautions and keeping distance or limiting exposure. Residents would no longer have either of these two options per the current proposals if they are living there 24-7.

3. ***https://www.fastexpert.com/blog/should-i-buy-a-house-near-power-lines/***

These are points of view from a real estate expert who clearly states that property value declines proportionately to the distance of the property from high tension lines. People have

apprehensions whether or not research clearly defines the risk. Potential buyers might have low priority for a property too close to a high tension power line.

4. ***https://orchard.com/blog/posts/power-lines-and-property-value***

Another research on real estate values lowered due to high tension power lines proximity.

What You Can Do

If you are concerned about possible health risks from electric and magnetic fields, you can:

- **Increase the distance between yourself and the source.** The greater the distance between you and the source of EMF, the lower your exposure.
- **Limit the time spent around the source.** The less time you spend near EMF, the lower your exposure.

NRS-KRS 115kV Transmission Line Project 5.1. Aesthetics

Figure 5.1-2. Wall Separating Residences and Lafayette Street

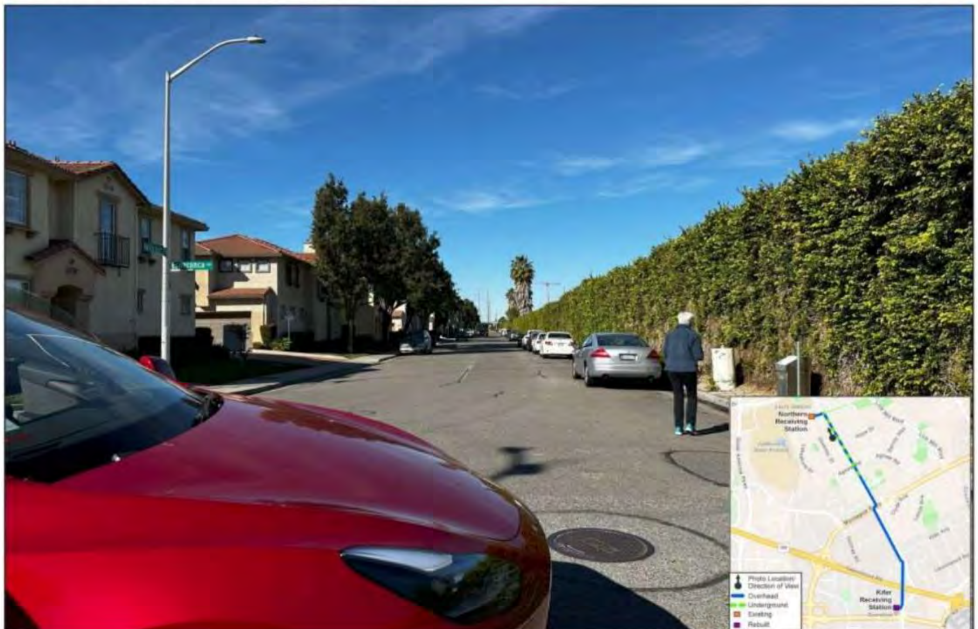

Figure 5.1-2

Wall Separating Residences and Lafayette Street

July 2024 5.1-5 Administrative Draft MND/IS

Email: NRS-KRS 115 kV T-Line

From: Phani Shankar Pandravada <pphanishankar@hotmail.com>
Sent: Friday, August 30, 2024 9:54 AM
To: NRS-KRS Project; mayorandcouncil@santaclaraca.gov; info@siliconvalleypower.com; planningcommission@santaclaraca.gov; manager@santaclaraca.gov; AJackman@santaclaraca.gov
Subject: Concerns Regarding Upcoming High Power Electric Wire Poles in Our Community for the upcoming SVP project connecting the Northern Receiving Station NRS to Kifer receiving station (KRS)- NRS-KRS 115kV Transmission Line Project

To Whomsoever it may concern,
We are residents of Santa Clara that will be negatively impacted by the "NRS-KRS 115kV Transmission Line Project". We have collectively reviewed the draft Initial Study/ Mitigated Negative declaration for "NRS-KRS 115kV Transmission Line Project" from July 2024. After reviewing this report and also attending the virtual and in person meetings, here are some references to emphasize our various concerns.
Reference #1 : CEQA's reporting includes these State reviewing agencies: California Air Resources Board (ARB), California Department of Fish and Wildlife, Bay Delta Region 3 (CDFW), California Department of Forestry and Fire Protection (CAL FIRE), California Department of Parks and Recreation, California Department of Toxic Substances Control (DTSC), California Department of Transportation, District 4 (DOT), California Department of Transportation, Division of Aeronautics (DOT), California Department of Transportation, Division of Transportation Planning (DOT), California Department of Water Resources (DWR), California Energy Commission, California Highway Patrol (CHP), California Native American Heritage Commission (NAHC), California Natural Resources Agency, California Public Utilities Commission (CPUC), California Regional Water Quality Control Board, San Francisco Bay Region 2 (RWQCB), Office of Historic Preservation, State Water Resources Control Board, Division of Drinking Water.
Personal observation#1 : *None of these agencies has any association with human health. CEQA reporting is not qualified enough to force the public to compromise on health concerns. Other agencies need to be involved to review this proposal, that are qualified to study the effect on " humans", not just wildlife and vegetation, or " environment. The checklist is completely devoid of our gravest humanitarian concerns. It is quite shocking that the project has not included any study to understand the potential impact of EMF waves on human lives, given that the transmission lines are potentially less than 60 feet from the closest dwellings. The city of Santa Clara needs to step in and have third party/ independent studies completed in favor of human health.*

Reference #2: Page 41 of report- Section 4.15. Electric and Magnetic Fields summary.
Personal observation#2 : *This consideration was completely absent earlier. Only after the residents raised their voices, this section was added. To our greatest disappointment, this section is copied over from an older report on the "South Loop Reconfiguration Project" from 2020. One would have expected that a new study would have been conducted for a project this size. The lack of due diligence and ignorance towards the specifics of this project are apparent and not acceptable. In fact we have found several sections of this older report as being reused across the entire report.*
The EMP map shared during the in person meeting had several flaws and we would like to question the viability of the study that was completed. What time of the day was the study completed and on what models were the values based on since these were done on assumption for the EMF values that would be there once the project is complete. Since we have seen the several sections of the report redundantly copied over from other reports, we would like a more detailed analysis of this report.
Regarding EMF concerns for human health, there are plenty of scientific studies that do indicate the grave concern on human health with EMF exposures and we cannot ignore this aspect. Here is a reference to an article and there are plenty of articles listed here under references:

https://psc.wi.gov/Documents/Brochures/EMF.pdf

There are not enough references listed in the draft report provided to us, and the explanation provided seems to be conveniently using studies that prove otherwise. This needs more investigation and references. The solution provided as raising the height of the poles and increasing the distance is non-existent. It was confirmed during the in person meeting that the design will not be altered and the height was already designed as required according to the SVP team present there. It seems that the preparers of this report did not even read the report after copying pasting from the old report as evident in the list of proposed solutions is not applicable here.

The live presentation on August 22nd showed the comparison of EMF values of household objects as a means to show that everyday household items carry a similar range of mG(milli Gauss) units. This comparison was inherently flawed since it mentioned that the household devices were producing those level at 1 feet while those indicated for 115KVf lines were at 60 feet. further these household devices do not operate 24X7 similar to the transmission lines.

There were a lot of citations of reports showcasing that no clear proof of EMF to human health exists but we would like to also point out certain states like Connecticut Department of Public Health have cited reports that have shown an increased incidence of childhood leukemia(Blood cancer) at avg exposure of only 3 mG. Also they have called out that some utility workers exposed to high levels of emf have increase risks of Lur Gehrig's disease.

They also call out that most impacts of EMF from high voltage lines dissipate at ~300 feet.

These are available on Page 2 & Page 3 of this report: https://portal.ct.gov/-/media/departments-and-agencies/dph/dph/environmental_health/eoha/pdf/emffactsheet2008pdf.pdf

This report has citations from WHO , National Institute of Environmental Health Sciences and California Department of Health Services.

https://www.niehs.nih.gov/sites/default/files/health/materials/electric_and_magnetic_fields_associated_with_the_use_of_electric_power_questions_and_answers_english_508.pdf

Some other questions around the EMF study map shared during presentation on Aug 22 2024:

1. Have you conducted an existing EMF study to identify the current value of the community ?
2. Are your emf study values based on the cumulative, or interference of existing emf and potential emf.
3. Emf value was calculated based on existing studies. What was the delta between mathematical modeling and actual values (from existing structures).
4. What is the delta between underground and overhead structures' emf values?
5. Can you provide the same for Route options B and C?
6. What happens when electrification of rail lines happens- as this is already planned for the future? Have you potentially considered the cumulative EMF effect in coexistence of the high power lines and with railway lines' electrification? Will the EMF values not be much higher then?
7. Can you share the mathematical modeling maps of Emf for 115k, 230k and the next two higher values of the power line ?
8. Can you share Emf maps from existing structures of 115k, 230 k and the next 2 higher values of the power line?
9. Please share any emf related information that you have especially if it contains assumptions for any calculations so we can understand the effects of current project and future projects.
10. Why does the electric pole structure proposed have wider diameter at the top? Can you share the design of the top of the pole ? Can it be extended by adding another section by bolting, welding or any other method? If so, what extra voltage can be added to the line?
11. what is the proposed power consumption of 95054 zip code for the next 5, 10 and 15 years in the master plan ?

Reference #3

Page 174- Section 5.21- Corona and induced current effect:

Personal observation#3

The railway line's proximity to the proposed high transmission lines is very concerning. The centerline distance from proposed lines to railway line is aproximately 50 feet per google maps with some margin for

error. As per the report there are no Corona rings proposed for the 115KV lines. There seems to be negligence in design in consideration of the hazards posed by these high voltage lines as Corona effect can transfer current to railway lines. All the residents are at a high risk of accidental hazards given the proximity of the railway line, this project is adding on to the hazards. This section is only stating information about what Corona effect is, as may be required by law, which by the way is again a copy paste from an old report. The only concern discussed in more depth is the audible noise level. The concerns are presented to imply that this is not significant by stating that 115KV lines pose less than significant risk**.**

Reference #4: Post meeting material from March 19th 2024
@https://santaclara.legistar.com/LegislationDetail.aspx?ID=6582415&GUID=E6E14646-3CF7-4D15-BB98-F18580696012&Options=&Search=
Personal observation#4: At surface level, it looks like Option #A was selected only based on Cost perspective, without any consideration to human health, young children, property values, Corona effect, long term sustainability perspective or any other factors. While its important to understand the results of CEQA study, its extremely critical to understand the negative impact of EMF on the many young children living around the proposed transmission lines. Without extensive research and study on the impact to young children and adult heath, we should not be approving such an incomplete proposal.
Page 6 of this document stated that the preferred route A cost of construction is $9.5 million. In discussions with several real estate agents in the region, I have unanimously found all to agree that the real estate values of residences in close proximity to power lines goes down. Its hard to find potential buyers and most folks refrain from buying a house too close to high power transmission lines. There are 1000 plus residences in the area affected by this project. Even if we were to make very rough assumptions, and assume minimal cost reduction in property values and take an average loss of $100,000 per property in the current year, that goes to $100,000,000 of loss of equity to the public. This is not even accounting the businesses affected by this project. This long explanation was to raise a point that if the selection of route A was saving money to the city, this is costing a huge financial loss to the public, which is not acceptable. This decrease in property values will also directly impact the tax collection by the Santa Clara Assessor and result in lower tax revenue coming into the city of Santa Clara.

Reference #5 : Page 49 of report- Figure 5.1-2. Wall separating residences and Lafayette Street.
Personal observation#5: *The picture is taken conveniently from the other side of the railway line which is actually Kingsbury street, inside a private community and not Lafayette street. This is further away from the proposed SVP lines. This is very misleading; see snapshots taken from Google maps below*

<u>And this is what is included on the report:</u>

NRS-KRS 115kV Transmission Line Project 5.1. Aesthetics

Figure 5.1-2. Wall Separating Residences and Lafayette Street

Figure 5.1-2
Wall Separating Residences and Lafayette Street

July 2024 5.1-5 Administrative Draft MND/IS

The Mission Garden Townhome community has no walls as such and the main entry to residences face the road directly and are the most impacted. There are several other single family homes on Lafayette street with the same impact, having an entryway directly on the street. This and including other citations of reusing sections of older reports, is all in all absolutely unacceptable and instills distrust. This further shows incompetency of the agency/ agencies preparing this report.

Conclusion: *This project's initial study needs to expand beyond CEQA for approval from the public. The limited scope of CEQA has failed to address the following concerns we have:*

- Health hazards due to EMF levels.- This is by far the gravest concern and CEQA is clearly not qualified to study that.
- Reduced property values- several references provided below.
- Loss of Aesthetic appeal for potential real estate buyers/ new and current businesses.
- Increase in audible noise levels during and post construction, which is already high in the area with presence of railway line and air traffic route.
- Increased fire hazard/ risk of other accidents.
- Induced current on railway lines with close proximity/ corona effect- CEQA report did not clearly address this for a 115KV line.
- Economic effect on the community from small to larger scale based on all of the above.

We demand further investigation and revisit other routes or proposals to resolve the power needs of the city. We have to ensure our and our kids' health is not at stake in the name of development and infrastructure and are not in agreement for this project to move forward. ***We cannot approve this to move forward as of now given the lack of study and absence of a satisfactory solution/ mitigation provided in favor/ assurance to public health.***

Additional References:
Research on effects of EMF on humans:

1. https://www.ncbi.nlm.nih.gov/pmc/articles/PMC6025786/

This research reinforces the concerns of EMF exposure effect on human health.

2. https://www.epa.gov/radtown/electric-and-magnetic-fields-power-lines

This resource suggests taking precautions and keeping distance or limiting exposure. Residents would no longer have either of these two options per the current proposals if they are living there 24-7.

What You Can Do

If you are concerned about possible health risks from electric and magnetic fields, you can:

- **Increase the distance between yourself and the source.** The greater the distance between you and the source of EMF, the lower your exposure.
- **Limit the time spent around the source.** The less time you spend near EMF, the lower your exposure.

3. ***https://www.fastexpert.com/blog/should-i-buy-a-house-near-power-lines/***

These are points of view from a real estate expert who clearly states that property value declines proportionately to the distance of the property from high tension lines. People have apprehensions whether or not research clearly defines the risk. Potential buyers might have low priority for a property too close to a high tension power line.

4. https://orchard.com/blog/posts/power-lines-and-property-value

Another research on real estate values lowered due to high tension power lines proximity.

Email: NRS-KRS 115 kV T-Line

From: Harini Tadinada <emailharini@gmail.com>
Sent: Friday, August 30, 2024 9:52 AM
To: NRS-KRS Project; mayorandcouncil@santaclaraca.gov; info@siliconvalleypower.com; planningcommission@santaclaraca.gov; manager@santaclaraca.gov; AJackman@santaclaraca.gov
Subject: Concerns Regarding Upcoming High Power Electric Wire Poles in Our Community for the upcoming SVP project connecting the Northern Receiving Station NRS to Kifer receiving station (KRS)- NRS-KRS 115kV Transmission Line Project

To Whomsoever it may concern,

We are residents of Santa Clara that will be negatively impacted by the "NRS-KRS 115kV Transmission Line Project". We have collectively reviewed the draft Initial Study/ Mitigated Negative declaration for "NRS-KRS 115kV Transmission Line Project" from July 2024. After reviewing this report and also attending the virtual and in person meetings, here are some references to emphasize our various concerns.

Reference #1 : CEQA's reporting includes these State reviewing agencies: California Air Resources Board (ARB), California Department of Fish and Wildlife, Bay Delta Region 3 (CDFW), California Department of Forestry and Fire Protection (CAL FIRE), California Department of Parks and Recreation, California Department of Toxic Substances Control (DTSC), California Department of Transportation, District 4 (DOT), California Department of Transportation, Division of Aeronautics (DOT), California Department of Transportation, Division of Transportation Planning (DOT), California Department of Water Resources (DWR), California Energy Commission, California Highway Patrol (CHP), California Native American Heritage Commission (NAHC), California Natural Resources Agency, California Public Utilities Commission (CPUC), California Regional Water Quality Control Board, San Francisco Bay Region 2 (RWQCB), Office of Historic Preservation, State Water Resources Control Board, Division of Drinking Water.

Personal observation#1 : *None of these agencies has any association with human health. CEQA reporting is not qualified enough to force the public to compromise on health concerns. Other agencies need to be involved to review this proposal, that are qualified to study the effect on " humans", not just wildlife and vegetation, or " environment. The checklist is completely devoid of our gravest humanitarian concerns. It is quite shocking that the project has not included any study to understand the potential impact of EMF waves on human lives, given that the transmission lines are potentially less than 60 feet from the closest dwellings. The city of Santa Clara needs to step in and have third party/ independent studies completed in favor of human health.*

Reference #2: Page 41 of report- Section 4.15. Electric and Magnetic Fields summary.

Personal observation#2 : *This consideration was completely absent earlier. Only after the residents raised their voices, this section was added. To our greatest disappointment, this section is copied over from an older report on the "South Loop Reconfiguration Project" from 2020. One would have expected that a new study would have been conducted for a project this size. The lack of due diligence and ignorance towards the specifics of this project are apparent and not acceptable. In fact we have found several sections of this older report as being reused across the entire report.*

The EMP map shared during the in person meeting had several flaws and we would like to question the viability of the study that was completed. What time of the day was the study completed and on what models were the values based on since these were done on assumption for the EMF values that would

be there once the project is complete. Since we have seen the several sections of the report redundantly copied over from other reports, we would like a more detailed analysis of this report.

Regarding EMF concerns for human health, there are plenty of scientific studies that do indicate the grave concern on human health with EMF exposures and we cannot ignore this aspect. Here is a reference to an article and there are plenty of articles listed here under references:

https://psc.wi.gov/Documents/Brochures/EMF.pdf

There are not enough references listed in the draft report provided to us, and the explanation provided seems to be conveniently using studies that prove otherwise. This needs more investigation and references. The solution provided as raising the height of the poles and increasing the distance is non-existent. It was confirmed during the in person meeting that the design will not be altered and the height was already designed as required according to the SVP team present there. It seems that the preparers of this report did not even read the report after copying pasting from the old report as evident in the list of proposed solutions is not applicable here.

The live presentation on August 22nd showed the comparison of EMF values of household objects as a means to show that everyday household items carry a similar range of mG(milli Gauss) units. This comparison was inherently flawed since it mentioned that the household devices were producing those level at 1 feet while those indicated for 115KVf lines were at 60 feet. further these household devices do not operate 24X7 similar to the transmission lines.

There were a lot of citations of reports showcasing that no clear proof of EMF to human health exists but we would like to also point out certain states like Connecticut Department of Public Health have cited reports that have shown an increased incidence of childhood leukemia(Blood cancer) at avg exposure of only 3 mG. Also they have called out that some utility workers exposed to high levels of emf have increase risks of Lur Gehrig's disease.

They also call out that most impacts of EMF from high voltage lines dissipate at ~300 feet.

These are available on Page 2 & Page 3 of this report: https://portal.ct.gov/-/media/departments-and-agencies/dph/dph/environmental_health/eoha/pdf/emffactsheet2008pdf.pdf

This report has citations from WHO , National Institute of Environmental Health Sciences and California Department of Health Services.

https://www.niehs.nih.gov/sites/default/files/health/materials/electric_and_magnetic_fields_associated_with_the_use_of_electric_power_questions_and_answers_english_508.pdf

Some other questions around the EMF study map shared during presentation on Aug 22 2024:

1. Have you conducted an existing EMF study to identify the current value of the community ?

2. Are your emf study values based on the cumulative, or interference of existing emf and potential emf.

3. Emf value was calculated based on existing studies. What was the delta between mathematical modeling and actual values (from existing structures).

4. What is the delta between underground and overhead structures' emf values?

5. Can you provide the same for Route options B and C?

6. What happens when electrification of rail lines happens- as this is already planned for the future? Have you potentially considered the cumulative EMF effect in coexistence of the high power lines and with railway lines' electrification? Will the EMF values not be much higher then?

7. Can you share the mathematical modeling maps of Emf for 115k, 230k and the next two higher values of the power line ?

8. Can you share Emf maps from existing structures of 115k, 230 k and the next 2 higher values of the power line?

9. Please share any emf related information that you have especially if it contains assumptions for any calculations so we can understand the effects of current project and future projects.

10. Why does the electric pole structure proposed have wider diameter at the top? Can you share the design of the top of the pole ? Can it be extended by adding another section by bolting, welding or any other method? If so, what extra voltage can be added to the line?

11. what is the proposed power consumption of 95054 zip code for the next 5, 10 and 15 years in the master plan ?

Reference #3

Page 174- Section 5.21- Corona and induced current effect:

Personal observation#3

The railway line's proximity to the proposed high transmission lines is very concerning. The centerline distance from proposed lines to railway line is aproximately 50 feet per google maps with some margin for error. As per the report there are no Corona rings proposed for the 115KV lines. There seems to be negligence in design in consideration of the hazards posed by these high voltage lines as Corona effect can transfer current to railway lines. All the residents are at a high risk of accidental hazards given the proximity of the railway line, this project is adding on to the hazards. This section is only stating information about what Corona effect is, as may be required by law, which by the way is again a copy paste from an old report. The only concern discussed in more depth is the audible noise level. The concerns are presented to imply that this is not significant by stating that 115KV lines pose less than significant risk**.**

Reference #4: Post meeting material from March 19th 2024
@https://santaclara.legistar.com/LegislationDetail.aspx?ID=6582415&GUID=E6E14646-3CF7-4D15-BB98-F18580696012&Options=&Search=

Personal observation#4: At surface level, it looks like Option #A was selected only based on Cost perspective, without any consideration to human health, young children, property values, Corona effect, long term sustainability perspective or any other factors. While its important to understand the results of CEQA study, its extremely critical to understand the negative impact of EMF on the many young children living around the proposed transmission lines. Without extensive research and study on the impact to young children and adult heath, we should not be approving such an incomplete proposal.

Page 6 of this document stated that the preferred route A cost of construction is $9.5 million. In discussions with several real estate agents in the region, I have unanimously found all to agree that the real estate values of residences in close proximity to power lines goes down. Its hard to find potential buyers and most folks refrain from buying a house too close to high power transmission lines. There are 1000 plus residences in the area affected by this project. Even if we were to make very rough assumptions, and assume minimal cost reduction in property values and take an average loss of $100,000 per property in the current year, that goes to $100,000,000 of loss of equity to the public. This is not even accounting the businesses affected by this project. This long explanation was to raise a point that if the selection of route A was saving money to the city, this is costing a huge financial loss to the

public, which is not acceptable. This decrease in property values will also directly impact the tax collection by the Santa Clara Assessor and result in lower tax revenue coming into the city of Santa Clara.

Reference #5 : Page 49 of report- Figure 5.1-2. Wall separating residences and Lafayette Street.

Personal observation#5: *The picture is taken conveniently from the other side of the railway line which is actually Kingsbury street, inside a private community and not Lafayette street. This is further away from the proposed SVP lines. This is very misleading; see snapshots taken from Google maps below*

And this is what is included on the report:

Figure 5.1-2. Wall Separating Residences and Lafayette Street

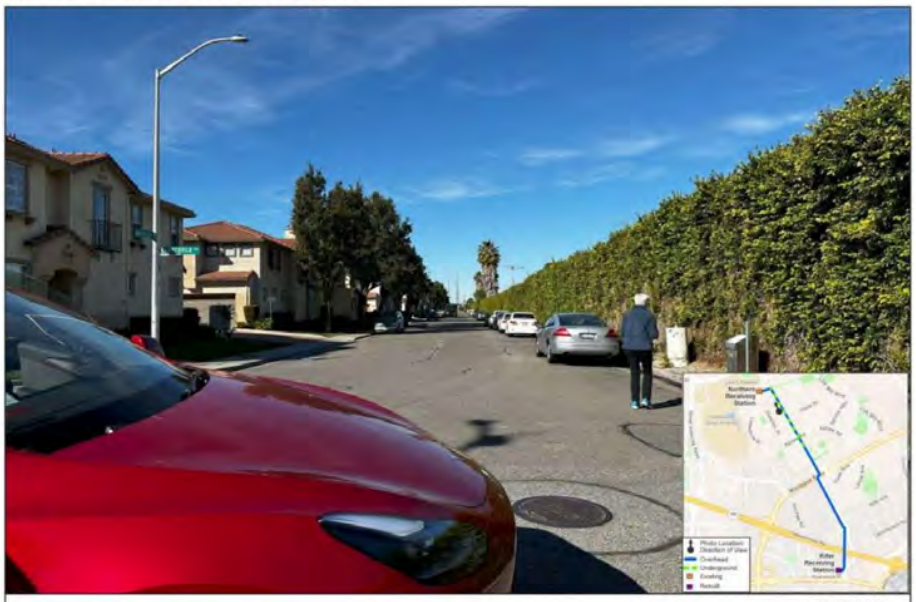

Figure 5.1-2
Wall Separating Residences and Lafayette Street

The Mission Garden Townhome community has no walls as such and the main entry to residences face the road directly and are the most impacted. There are several other single family homes on Lafayette street with the same impact, having an entryway directly on the street. This and including other citations of reusing sections of older reports, is all in all absolutely unacceptable and instills distrust. This further shows incompetency of the agency/ agencies preparing this report.

Conclusion: *This project's initial study needs to expand beyond CEQA for approval from the public. The limited scope of CEQA has failed to address the following concerns we have:*

- *Health hazards due to EMF levels.- This is by far the gravest concern and CEQA is clearly not qualified to study that.*
- *Reduced property values- several references provided below.*
- *Loss of Aesthetic appeal for potential real estate buyers/ new and current businesses.*
- *Increase in audible noise levels during and post construction, which is already high in the area with presence of railway line and air traffic route.*
- *Increased fire hazard/ risk of other accidents.*
- *Induced current on railway lines with close proximity/ corona effect- CEQA report did not clearly address this for a 115KV line.*
- *Economic effect on the community from small to larger scale based on all of the above.*

*We demand further investigation and revisit other routes or proposals to resolve the power needs of the city. We have to ensure our and our kids' health is not at stake in the name of development and infrastructure and are not in agreement for this project to move forward****. We cannot approve this to move forward as of now given the lack of study and absence of a satisfactory solution/ mitigation provided in favor/ assurance to public health.***

Additional References:

Research on effects of EMF on humans:

1. https://www.ncbi.nlm.nih.gov/pmc/articles/PMC6025786/

This research reinforces the concerns of EMF exposure effect on human health.

2. https://www.epa.gov/radtown/electric-and-magnetic-fields-power-lines

This resource suggests taking precautions and keeping distance or limiting exposure. Residents would no longer have either of these two options per the current proposals if they are living there 24-7.

What You Can Do

If you are concerned about possible health risks from electric and magnetic fields, you can:

- **Increase the distance between yourself and the source.** The greater the distance between you and the source of EMF, the lower your exposure.
- **Limit the time spent around the source.** The less time you spend near EMF, the lower your exposure.

3. ***https://www.fastexpert.com/blog/should-i-buy-a-house-near-power-lines/***

These are points of view from a real estate expert who clearly states that property value declines proportionately to the distance of the property from high tension lines. People have apprehensions whether or not research clearly defines the risk. Potential buyers might have low priority for a property too close to a high tension power line.

4. https://orchard.com/blog/posts/power-lines-and-property-value

Another research on real estate values lowered due to high tension power lines proximity.

Email: NRS-KRS 115 kV T-Line

From: Shankar Pandravada <emailshankar@gmail.com>
Sent: Friday, August 30, 2024 9:47 AM
To: NRS-KRS Project; Mayor and Council; info@siliconvalleypower.com; planningcommission@santaclaraca.gov; manager@santaclaraca.gov; AJackman@santaclaraca.gov
Subject: Concerns Regarding Upcoming High Power Electric Wire Poles in Our Community for the upcoming SVP project connecting the Northern Receiving Station NRS to Kifer receiving station (KRS)- NRS-KRS 115kV Transmission Line Project

To Whomsoever it may concern,

We are residents of Santa Clara that will be negatively impacted by the "NRS-KRS 115kV Transmission Line Project". We have collectively reviewed the draft Initial Study/ Mitigated Negative declaration for "NRS-KRS 115kV Transmission Line Project" from July 2024. After reviewing this report and also attending the virtual and in person meetings, here are some references to emphasize our various concerns.

Reference #1 : CEQA's reporting includes these State reviewing agencies: California Air Resources Board (ARB), California Department of Fish and Wildlife, Bay Delta Region 3 (CDFW), California Department of Forestry and Fire Protection (CAL FIRE), California Department of Parks and Recreation, California Department of Toxic Substances Control (DTSC), California Department of Transportation, District 4 (DOT), California Department of Transportation, Division of Aeronautics (DOT), California Department of Transportation, Division of Transportation Planning (DOT), California Department of Water Resources (DWR), California Energy Commission, California Highway Patrol (CHP), California Native American Heritage Commission (NAHC), California Natural Resources Agency, California Public Utilities Commission (CPUC), California Regional Water Quality Control Board, San Francisco Bay Region 2 (RWQCB), Office of Historic Preservation, State Water Resources Control Board, Division of Drinking Water.

Personal observation#1 : *None of these agencies has any association with human health. CEQA reporting is not qualified enough to force the public to compromise on health concerns. Other agencies need to be involved to review this proposal, that are qualified to study the effect on " humans", not just wildlife and vegetation, or " environment. The checklist is completely devoid of our gravest humanitarian concerns. It is quite shocking that the project has not included any study to understand the potential impact of EMF waves on human lives, given that the transmission lines are potentially less than 60 feet from the closest dwellings. The city of Santa Clara needs to step in and have third party/ independent studies completed in favor of human health.*

Reference #2: Page 41 of report- Section 4.15. Electric and Magnetic Fields summary.

Personal observation#2 : *This consideration was completely absent earlier. Only after the residents raised their voices, this section was added. To our greatest disappointment, this section is copied over from an older report on the "South Loop Reconfiguration Project" from 2020. One would have expected that a new study would have been conducted for a project this size. The lack of due diligence and ignorance towards the specifics of this project are apparent and not acceptable. In fact we have found several sections of this older report as being reused across the entire report.*

The EMP map shared during the in person meeting had several flaws and we would like to question the viability of the study that was completed. What time of the day was the study completed and on what models were the values based on since these were done on assumption for the EMF values that would

be there once the project is complete. Since we have seen the several sections of the report redundantly copied over from other reports, we would like a more detailed analysis of this report.

Regarding EMF concerns for human health, there are plenty of scientific studies that do indicate the grave concern on human health with EMF exposures and we cannot ignore this aspect. Here is a reference to an article and there are plenty of articles listed here under references:

https://psc.wi.gov/Documents/Brochures/EMF.pdf

There are not enough references listed in the draft report provided to us, and the explanation provided seems to be conveniently using studies that prove otherwise. This needs more investigation and references. The solution provided as raising the height of the poles and increasing the distance is non-existent. It was confirmed during the in person meeting that the design will not be altered and the height was already designed as required according to the SVP team present there. It seems that the preparers of this report did not even read the report after copying pasting from the old report as evident in the list of proposed solutions is not applicable here.

The live presentation on August 22nd showed the comparison of EMF values of household objects as a means to show that everyday household items carry a similar range of mG(milli Gauss) units. This comparison was inherently flawed since it mentioned that the household devices were producing those level at 1 feet while those indicated for 115KVf lines were at 60 feet. further these household devices do not operate 24X7 similar to the transmission lines.

There were a lot of citations of reports showcasing that no clear proof of EMF to human health exists but we would like to also point out certain states like Connecticut Department of Public Health have cited reports that have shown an increased incidence of childhood leukemia(Blood cancer) at avg exposure of only 3 mG. Also they have called out that some utility workers exposed to high levels of emf have increase risks of Lur Gehrig's disease.

They also call out that most impacts of EMF from high voltage lines dissipate at ~300 feet.

These are available on Page 2 & Page 3 of this report: https://portal.ct.gov/-/media/departments-and-agencies/dph/dph/environmental_health/eoha/pdf/emffactsheet2008pdf.pdf

This report has citations from WHO , National Institute of Environmental Health Sciences and California Department of Health Services.

https://www.niehs.nih.gov/sites/default/files/health/materials/electric_and_magnetic_fields_associated_with_the_use_of_electric_power_questions_and_answers_english_508.pdf

Some other questions around the EMF study map shared during presentation on Aug 22 2024:

1. Have you conducted an existing EMF study to identify the current value of the community ?

2. Are your emf study values based on the cumulative, or interference of existing emf and potential emf.

3. Emf value was calculated based on existing studies. What was the delta between mathematical modeling and actual values (from existing structures).

4. What is the delta between underground and overhead structures' emf values?

5. Can you provide the same for Route options B and C?

6. What happens when electrification of rail lines happens- as this is already planned for the future? Have you potentially considered the cumulative EMF effect in coexistence of the high power lines and with railway lines' electrification? Will the EMF values not be much higher then?

7. Can you share the mathematical modeling maps of Emf for 115k, 230k and the next two higher values of the power line ?

8. Can you share Emf maps from existing structures of 115k, 230 k and the next 2 higher values of the power line?

9. Please share any emf related information that you have especially if it contains assumptions for any calculations so we can understand the effects of current project and future projects.

10. Why does the electric pole structure proposed have wider diameter at the top? Can you share the design of the top of the pole ? Can it be extended by adding another section by bolting, welding or any other method? If so, what extra voltage can be added to the line?

11. what is the proposed power consumption of 95054 zip code for the next 5, 10 and 15 years in the master plan ?

Reference #3

Page 174- Section 5.21- Corona and induced current effect:

Personal observation#3

The railway line's proximity to the proposed high transmission lines is very concerning. The centerline distance from proposed lines to railway line is aproximately 50 feet per google maps with some margin for error. As per the report there are no Corona rings proposed for the 115KV lines. There seems to be negligence in design in consideration of the hazards posed by these high voltage lines as Corona effect can transfer current to railway lines. All the residents are at a high risk of accidental hazards given the proximity of the railway line, this project is adding on to the hazards. This section is only stating information about what Corona effect is, as may be required by law, which by the way is again a copy paste from an old report. The only concern discussed in more depth is the audible noise level. The concerns are presented to imply that this is not significant by stating that 115KV lines pose less than significant risk**.**

Reference #4: Post meeting material from March 19th 2024
@https://santaclara.legistar.com/LegislationDetail.aspx?ID=6582415&GUID=E6E14646-3CF7-4D15-BB98-F18580696012&Options=&Search=

Personal observation#4: At surface level, it looks like Option #A was selected only based on Cost perspective, without any consideration to human health, young children, property values, Corona effect, long term sustainability perspective or any other factors. While its important to understand the results of CEQA study, its extremely critical to understand the negative impact of EMF on the many young children living around the proposed transmission lines. Without extensive research and study on the impact to young children and adult heath, we should not be approving such an incomplete proposal.

Page 6 of this document stated that the preferred route A cost of construction is $9.5 million. In discussions with several real estate agents in the region, I have unanimously found all to agree that the real estate values of residences in close proximity to power lines goes down. Its hard to find potential buyers and most folks refrain from buying a house too close to high power transmission lines. There are 1000 plus residences in the area affected by this project. Even if we were to make very rough assumptions, and assume minimal cost reduction in property values and take an average loss of $100,000 per property in the current year, that goes to $100,000,000 of loss of equity to the public. This is not even accounting the businesses affected by this project. This long explanation was to raise a point that if the selection of route A was saving money to the city, this is costing a huge financial loss to the

public, which is not acceptable. This decrease in property values will also directly impact the tax collection by the Santa Clara Assessor and result in lower tax revenue coming into the city of Santa Clara.

Reference #5 : Page 49 of report- Figure 5.1-2. Wall separating residences and Lafayette Street.

Personal observation#5: *The picture is taken conveniently from the other side of the railway line which is actually Kingsbury street, inside a private community and not Lafayette street. This is further away from the proposed SVP lines. This is very misleading; see snapshots taken from Google maps below*

And this is what is included on the report:

Figure 5.1-2. Wall Separating Residences and Lafayette Street

Figure 5.1-2
Wall Separating Residences and Lafayette Street

The Mission Garden Townhome community has no walls as such and the main entry to residences face the road directly and are the most impacted. There are several other single family homes on Lafayette street with the same impact, having an entryway directly on the street. This and including other citations of reusing sections of older reports, is all in all absolutely unacceptable and instills distrust. This further shows incompetency of the agency/ agencies preparing this report.

Conclusion: *This project's initial study needs to expand beyond CEQA for approval from the public. The limited scope of CEQA has failed to address the following concerns we have:*

- *Health hazards due to EMF levels.- This is by far the gravest concern and CEQA is clearly not qualified to study that.*
- *Reduced property values- several references provided below.*
- *Loss of Aesthetic appeal for potential real estate buyers/ new and current businesses.*
- *Increase in audible noise levels during and post construction, which is already high in the area with presence of railway line and air traffic route.*
- *Increased fire hazard/ risk of other accidents.*
- *Induced current on railway lines with close proximity/ corona effect- CEQA report did not clearly address this for a 115KV line.*
- *Economic effect on the community from small to larger scale based on all of the above.*

*We demand further investigation and revisit other routes or proposals to resolve the power needs of the city. We have to ensure our and our kids' health is not at stake in the name of development and infrastructure and are not in agreement for this project to move forward**. We cannot approve this to move forward as of now given the lack of study and absence of a satisfactory solution/ mitigation provided in favor/ assurance to public health.***

Additional References:

Research on effects of EMF on humans:

1. https://www.ncbi.nlm.nih.gov/pmc/articles/PMC6025786/

This research reinforces the concerns of EMF exposure effect on human health.

2. https://www.epa.gov/radtown/electric-and-magnetic-fields-power-lines

This resource suggests taking precautions and keeping distance or limiting exposure. Residents would no longer have either of these two options per the current proposals if they are living there 24-7.

What You Can Do

If you are concerned about possible health risks from electric and magnetic fields, you can:

- **Increase the distance between yourself and the source.** The greater the distance between you and the source of EMF, the lower your exposure.
- **Limit the time spent around the source.** The less time you spend near EMF, the lower your exposure.

3. ***https://www.fastexpert.com/blog/should-i-buy-a-house-near-power-lines/***

These are points of view from a real estate expert who clearly states that property value declines proportionately to the distance of the property from high tension lines. People have apprehensions whether or not research clearly defines the risk. Potential buyers might have low priority for a property too close to a high tension power line.

4. https://orchard.com/blog/posts/power-lines-and-property-value

Another research on real estate values lowered due to high tension power lines proximity.

Thank you for your kind attention regarding this matter. Apologies for the rather long email, we as residents had to gather our collective thoughts and send this to you to bring to your attention our concerns. We really hope all of you will look into this and continue working with the residents to find a win-win solution.

Shankar.

Email: NRS-KRS 115 kV T-Line

From: Vishaka Sutrave <vishakasutrave@gmail.com>
Sent: Friday, August 30, 2024 9:24 AM
To: NRS-KRS Project; mayorandcouncil@santaclaraca.gov; info@siliconvalleypower.com; planningcommission@santaclaraca.gov; manager@santaclaraca.gov; AJackman@santaclaraca.gov
Subject: Concerns Regarding Upcoming High Power Electric Wire Poles in Our Community for the upcoming SVP project connecting the Northern Receiving Station NRS to Kifer receiving station (KRS)- NRS-KRS 115kV Transmission Line Project

To Whomsoever it may concern,
We are residents of Santa Clara that will be negatively impacted by the "NRS-KRS 115kV Transmission Line Project". We have collectively reviewed the draft Initial Study/ Mitigated Negative declaration for "NRS-KRS 115kV Transmission Line Project" from July 2024. After reviewing this report and also attending the virtual and in person meetings, here are some references to emphasize our various concerns.
Reference #1 : CEQA's reporting includes these State reviewing agencies: California Air Resources Board (ARB), California Department of Fish and Wildlife, Bay Delta Region 3 (CDFW), California Department of Forestry and Fire Protection (CAL FIRE), California Department of Parks and Recreation, California Department of Toxic Substances Control (DTSC), California Department of Transportation, District 4 (DOT), California Department of Transportation, Division of Aeronautics (DOT), California Department of Transportation, Division of Transportation Planning (DOT), California Department of Water Resources (DWR), California Energy Commission, California Highway Patrol (CHP), California Native American Heritage Commission (NAHC), California Natural Resources Agency, California Public Utilities Commission (CPUC), California Regional Water Quality Control Board, San Francisco Bay Region 2 (RWQCB), Office of Historic Preservation, State Water Resources Control Board, Division of Drinking Water.
Personal observation#1 : *None of these agencies has any association with human health. CEQA reporting is not qualified enough to force the public to compromise on health concerns. Other agencies need to be involved to review this proposal, that are qualified to study the effect on " humans", not just wildlife and vegetation, or " environment. The checklist is completely devoid of our gravest humanitarian concerns. It is quite shocking that the project has not included any study to understand the potential impact of EMF waves on human lives, given that the transmission lines are potentially less than 60 feet from the closest dwellings. The city of Santa Clara needs to step in and have third party/ independent studies completed in favor of human health.*
Reference #2: Page 41 of report- Section 4.15. Electric and Magnetic Fields summary.
Personal observation#2 : *This consideration was completely absent earlier. Only after the residents raised their voices, this section was added. To our greatest disappointment, this section is copied over from an older report on the "South Loop Reconfiguration Project" from 2020. One would have expected that a new study would have been conducted for a project this size. The lack of due diligence and ignorance towards the specifics of this project are apparent and not acceptable. In fact we have found several sections of this older report as being reused across the entire report.*
The EMP map shared during the in person meeting had several flaws and we would like to question the viability of the study that was completed. What time of the day was the study completed and on what models were the values based on since these were done on assumption for the EMF values that would be there once the project is complete. Since we have seen the several sections of the report redundantly copied over from other reports, we would like a more detailed analysis of this report.
Regarding EMF concerns for human health, there are plenty of scientific studies that do indicate the grave concern on human health with EMF exposures and we cannot ignore this aspect. Here is a reference to an article and there are plenty of articles listed here under references:

https://psc.wi.gov/Documents/Brochures/EMF.pdf

There are not enough references listed in the draft report provided to us, and the explanation provided seems to be conveniently using studies that prove otherwise. This needs more investigation and references. The solution provided as raising the height of the poles and increasing the distance is non-existent. It was confirmed during the in person meeting that the design will not be altered and the height was already designed as required according to the SVP team present there. It seems that the preparers of this report did not even read the report after copying pasting from the old report as evident in the list of proposed solutions is not applicable here.

The live presentation on August 22nd showed the comparison of EMF values of household objects as a means to show that everyday household items carry a similar range of mG(milli Gauss) units. This comparison was inherently flawed since it mentioned that the household devices were producing those level at 1 feet while those indicated for 115KVf lines were at 60 feet. further these household devices do not operate 24X7 similar to the transmission lines.

There were a lot of citations of reports showcasing that no clear proof of EMF to human health exists but we would like to also point out certain states like Connecticut Department of Public Health have cited reports that have shown an increased incidence of childhood leukemia(Blood cancer) at avg exposure of only 3 mG. Also they have called out that some utility workers exposed to high levels of emf have increase risks of Lur Gehrig's disease.

They also call out that most impacts of EMF from high voltage lines dissipate at ~300 feet.

These are available on Page 2 & Page 3 of this report: https://portal.ct.gov/-/media/departments-and-agencies/dph/dph/environmental_health/eoha/pdf/emffactsheet2008pdf.pdf

This report has citations from WHO , National Institute of Environmental Health Sciences and California Department of Health Services.

https://www.niehs.nih.gov/sites/default/files/health/materials/electric_and_magnetic_fields_associated_with_the_use_of_electric_power_questions_and_answers_english_508.pdf

Some other questions around the EMF study map shared during presentation on Aug 22 2024:

1. Have you conducted an existing EMF study to identify the current value of the community ?
2. Are your emf study values based on the cumulative, or interference of existing emf and potential emf.
3. Emf value was calculated based on existing studies. What was the delta between mathematical modeling and actual values (from existing structures).
4. What is the delta between underground and overhead structures' emf values?
5. Can you provide the same for Route options B and C?
6. What happens when electrification of rail lines happens- as this is already planned for the future? Have you potentially considered the cumulative EMF effect in coexistence of the high power lines and with railway lines' electrification? Will the EMF values not be much higher then?
7. Can you share the mathematical modeling maps of Emf for 115k, 230k and the next two higher values of the power line ?
8. Can you share Emf maps from existing structures of 115k, 230 k and the next 2 higher values of the power line?
9. Please share any emf related information that you have especially if it contains assumptions for any calculations so we can understand the effects of current project and future projects.
10. Why does the electric pole structure proposed have wider diameter at the top? Can you share the design of the top of the pole ? Can it be extended by adding another section by bolting, welding or any other method? If so, what extra voltage can be added to the line?
11. what is the proposed power consumption of 95054 zip code for the next 5, 10 and 15 years in the master plan ?

Reference #3

Page 174- Section 5.21- Corona and induced current effect:

Personal observation#3

The railway line's proximity to the proposed high transmission lines is very concerning. The centerline distance from proposed lines to railway line is aproximately 50 feet per google maps with some margin for error. As per the report there are no Corona rings proposed for the 115KV lines. There seems to be

negligence in design in consideration of the hazards posed by these high voltage lines as Corona effect can transfer current to railway lines. All the residents are at a high risk of accidental hazards given the proximity of the railway line, this project is adding on to the hazards. This section is only stating information about what Corona effect is, as may be required by law, which by the way is again a copy paste from an old report. The only concern discussed in more depth is the audible noise level. The concerns are presented to imply that this is not significant by stating that 115KV lines pose less than significant risk**.**

Reference #4: Post meeting material from March 19th 2024 @https://santaclara.legistar.com/LegislationDetail.aspx?ID=6582415&GUID=E6E14646-3CF7-4D15-BB98-F18580696012&Options=&Search=

Personal observation#4: At surface level, it looks like Option #A was selected only based on Cost perspective, without any consideration to human health, young children, property values, Corona effect, long term sustainability perspective or any other factors. While its important to understand the results of CEQA study, its extremely critical to understand the negative impact of EMF on the many young children living around the proposed transmission lines. Without extensive research and study on the impact to young children and adult heath, we should not be approving such an incomplete proposal.

Page 6 of this document stated that the preferred route A cost of construction is $9.5 million. In discussions with several real estate agents in the region, I have unanimously found all to agree that the real estate values of residences in close proximity to power lines goes down. Its hard to find potential buyers and most folks refrain from buying a house too close to high power transmission lines. There are 1000 plus residences in the area affected by this project. Even if we were to make very rough assumptions, and assume minimal cost reduction in property values and take an average loss of $100,000 per property in the current year, that goes to $100,000,000 of loss of equity to the public. This is not even accounting the businesses affected by this project. This long explanation was to raise a point that if the selection of route A was saving money to the city, this is costing a huge financial loss to the public, which is not acceptable. This decrease in property values will also directly impact the tax collection by the Santa Clara Assessor and result in lower tax revenue coming into the city of Santa Clara.

Reference #5 : Page 49 of report- Figure 5.1-2. Wall separating residences and Lafayette Street.

Personal observation#5: *The picture is taken conveniently from the other side of the railway line which is actually Kingsbury street, inside a private community and not Lafayette street. This is further away from the proposed SVP lines. This is very misleading; see snapshots taken from Google maps below*

And this is what is included on the report:

The Mission Garden Townhome community has no walls as such and the main entry to residences face the road directly and are the most impacted. There are several other single family homes on Lafayette street with the same impact, having an entryway directly on the street. This and including other citations

of reusing sections of older reports, is all in all absolutely unacceptable and instills distrust. This further shows incompetency of the agency/ agencies preparing this report.

Conclusion: *This project's initial study needs to expand beyond CEQA for approval from the public. The limited scope of CEQA has failed to address the following concerns we have:*

- *Health hazards due to EMF levels.- This is by far the gravest concern and CEQA is clearly not qualified to study that.*
- *Reduced property values- several references provided below.*
- *Loss of Aesthetic appeal for potential real estate buyers/ new and current businesses.*
- *Increase in audible noise levels during and post construction, which is already high in the area with presence of railway line and air traffic route.*
- *Increased fire hazard/ risk of other accidents.*
- *Induced current on railway lines with close proximity/ corona effect- CEQA report did not clearly address this for a 115KV line.*
- *Economic effect on the community from small to larger scale based on all of the above.*

*We demand further investigation and revisit other routes or proposals to resolve the power needs of the city. We have to ensure our and our kids' health is not at stake in the name of development and infrastructure and are not in agreement for this project to move forward**. We cannot approve this to move forward as of now given the lack of study and absence of a satisfactory solution/ mitigation provided in favor/ assurance to public health.***

Additional References:

Research on effects of EMF on humans:

1. ***https://www.ncbi.nlm.nih.gov/pmc/articles/PMC6025786/***

This research reinforces the concerns of EMF exposure effect on human health.

2. ***https://www.epa.gov/radtown/electric-and-magnetic-fields-power-lines***

This resource suggests taking precautions and keeping distance or limiting exposure. Residents would no longer have either of these two options per the current proposals if they are living there 24-7.

Regards
Vishaka Sutrave

Email: NRS-KRS 115 kV T-Line

From: Jerin <jerin@jerin.me>
Sent: Friday, August 30, 2024 9:12 AM
To: NRS-KRS Project; mayorandcouncil@santaclaraca.gov; info@siliconvalleypower.com; planningcommission@santaclaraca.gov; manager@santaclaraca.gov; AJackman@santaclaraca.gov
Subject: Concerns Regarding Upcoming High Power Electric Wire Poles in Our Community for the upcoming SVP project connecting the Northern Receiving Station NRS to Kifer receiving station (KRS)- NRS-KRS 115kV Transmission Line Project

To Whomsoever it may concern,

We are residents of Santa Clara that will be negatively impacted by the "NRS-KRS 115kV Transmission Line Project". We have collectively reviewed the draft Initial Study/ Mitigated Negative declaration for "NRS-KRS 115kV Transmission Line Project" from July 2024. After reviewing this report and also attending the virtual and in person meetings, here are some references to emphasize our various concerns.

Reference #1 : CEQA's reporting includes these State reviewing agencies: California Air Resources Board (ARB), California Department of Fish and Wildlife, Bay Delta Region 3 (CDFW), California Department of Forestry and Fire Protection (CAL FIRE), California Department of Parks and Recreation, California Department of Toxic Substances Control (DTSC), California Department of Transportation, District 4 (DOT), California Department of Transportation, Division of Aeronautics (DOT), California Department of Transportation, Division of Transportation Planning (DOT), California Department of Water Resources (DWR), California Energy Commission, California Highway Patrol (CHP), California Native American Heritage Commission (NAHC), California Natural Resources Agency, California Public Utilities Commission (CPUC), California Regional Water Quality Control Board, San Francisco Bay Region 2 (RWQCB), Office of Historic Preservation, State Water Resources Control Board, Division of Drinking Water.

Personal observation#1 : *None of these agencies has any association with human health. CEQA reporting is not qualified enough to force the public to compromise on health concerns. Other agencies need to be involved to review this proposal, that are qualified to study the effect on " humans", not just wildlife and vegetation, or " environment. The checklist is completely devoid of our gravest humanitarian concerns. It is quite shocking that the project has not included any study to understand the potential impact of EMF waves on human lives, given that the transmission lines are potentially less than 60 feet from the closest dwellings. The city of Santa Clara needs to step in and have third party/ independent studies completed in favor of human health.*

Reference #2: Page 41 of report- Section 4.15. Electric and Magnetic Fields summary.

Personal observation#2 : *This consideration was completely absent earlier. Only after the residents raised their voices, this section was added. To our greatest disappointment, this section is copied over from an older report on the "South Loop Reconfiguration Project" from 2020. One would have expected that a new study would have been conducted for a project this size. The lack of due diligence and ignorance towards the specifics of this project are apparent and not acceptable. In fact we have found several sections of this older report as being reused across the entire report.*

The EMP map shared during the in person meeting had several flaws and we would like to question the viability of the study that was completed. What time of the day was the study completed and on what models were the values based on since these were done on assumption for the EMF values that would be there once the project is complete. Since we have seen the several sections of the report redundantly copied over from other reports, we would like a more detailed analysis of this report.

Regarding EMF concerns for human health, there are plenty of scientific studies that do indicate the grave concern on human health with EMF exposures and we cannot ignore this aspect. Here is a reference to an article and there are plenty of articles listed here under references:

https://psc.wi.gov/Documents/Brochures/EMF.pdf

There are not enough references listed in the draft report provided to us, and the explanation provided seems to be conveniently using studies that prove otherwise. This needs more investigation and references. The solution provided as raising the height of the poles and increasing the distance is non-existent. It was confirmed during the in person meeting that the design will not be altered and the height was already designed as required according to the SVP team present there. It seems that the preparers of this report did not even read the report after copying pasting from the old report as evident in the list of proposed solutions is not applicable here.

The live presentation on August 22nd showed the comparison of EMF values of household objects as a means to show that everyday household items carry a similar range of mG(milli Gauss) units. This comparison was inherently flawed since it mentioned that the household devices were producing those level at 1 feet while those indicated for 115KVf lines were at 60 feet. further these household devices do not operate 24X7 similar to the transmission lines.

There were a lot of citations of reports showcasing that no clear proof of EMF to human health exists but we would like to also point out certain states like Connecticut Department of Public Health have cited reports that have shown an increased incidence of childhood leukemia(Blood cancer) at avg exposure of only 3 mG. Also they have called out that some utility workers exposed to high levels of emf have increase risks of Lur Gehrig's disease.

They also call out that most impacts of EMF from high voltage lines dissipate at ~300 feet.

These are available on Page 2 & Page 3 of this report: https://portal.ct.gov/-/media/departments-and-agencies/dph/dph/environmental_health/eoha/pdf/emffactsheet2008pdf.pdf

This report has citations from WHO , National Institute of Environmental Health Sciences and California Department of Health Services.

https://www.niehs.nih.gov/sites/default/files/health/materials/electric_and_magnetic_fields_associated_with_the_use_of_electric_power_questions_and_answers_english_508.pdf

Some other questions around the EMF study map shared during presentation on Aug 22 2024:

1. Have you conducted an existing EMF study to identify the current value of the community ?

2. Are your emf study values based on the cumulative, or interference of existing emf and potential emf.

3. Emf value was calculated based on existing studies. What was the delta between mathematical modeling and actual values (from existing structures).

4. What is the delta between underground and overhead structures' emf values?

5. Can you provide the same for Route options B and C?

6. What happens when electrification of rail lines happens- as this is already planned for the future? Have you potentially considered the cumulative EMF effect in coexistence of the high power lines and with railway lines' electrification? Will the EMF values not be much higher then?

7. Can you share the mathematical modeling maps of Emf for 115k, 230k and the next two higher values of the power line ?

8. Can you share Emf maps from existing structures of 115k, 230 k and the next 2 higher values of the power line?

9. Please share any emf related information that you have especially if it contains assumptions for any calculations so we can understand the effects of current project and future projects.

10. Why does the electric pole structure proposed have wider diameter at the top? Can you share the design of the top of the pole ? Can it be extended by adding another section by bolting, welding or any other method? If so, what extra voltage can be added to the line?

11. what is the proposed power consumption of 95054 zip code for the next 5, 10 and 15 years in the master plan ?

Reference #3

Page 174- Section 5.21- Corona and induced current effect:

Personal observation#3

The railway line's proximity to the proposed high transmission lines is very concerning. The centerline distance from proposed lines to railway line is aproximately 50 feet per google maps with some margin for error. As per the report there are no Corona rings proposed for the 115KV lines. There seems to be negligence in design in consideration of the hazards posed by these high voltage lines as Corona effect can transfer current to railway lines. All the residents are at a high risk of accidental hazards given the proximity of the railway line, this project is adding on to the hazards. This section is only stating information about what Corona effect is, as may be required by law, which by the way is again a copy paste from an old report. The only concern discussed in more depth is the audible noise level. The concerns are presented to imply that this is not significant by stating that 115KV lines pose less than significant risk**.**

Reference #4: Post meeting material from March 19th 2024
@https://santaclara.legistar.com/LegislationDetail.aspx?ID=6582415&GUID=E6E14646-3CF7-4D15-BB98-F18580696012&Options=&Search=

Personal observation#4: At surface level, it looks like Option #A was selected only based on Cost perspective, without any consideration to human health, young children, property values, Corona effect, long term sustainability perspective or any other factors. While its important to understand the results of CEQA study, its extremely critical to understand the negative impact of EMF on the many young children living around the proposed transmission lines. Without extensive research and study on the impact to young children and adult heath, we should not be approving such an incomplete proposal.

Page 6 of this document stated that the preferred route A cost of construction is $9.5 million. In discussions with several real estate agents in the region, I have unanimously found all to agree that the real estate values of residences in close proximity to power lines goes down. Its hard to find potential buyers and most folks refrain from buying a house too close to high power transmission lines. There are 1000 plus residences in the area affected by this project. Even if we were to make very rough assumptions, and assume minimal cost reduction in property values and take an average loss of $100,000 per property in the current year, that goes to $100,000,000 of loss of equity to the public. This is not even accounting the businesses affected by this project. This long explanation was to raise a point that if the selection of route A was saving money to the city, this is costing a huge financial loss to the

public, which is not acceptable. This decrease in property values will also directly impact the tax collection by the Santa Clara Assessor and result in lower tax revenue coming into the city of Santa Clara.

Reference #5 : Page 49 of report- Figure 5.1-2. Wall separating residences and Lafayette Street.

Personal observation#5: *The picture is taken conveniently from the other side of the railway line which is actually Kingsbury street, inside a private community and not Lafayette street. This is further away from the proposed SVP lines. This is very misleading; see snapshots taken from Google maps below*

And this is what is included on the report:

Figure 5.1-2. Wall Separating Residences and Lafayette Street

Figure 5.1-2
Wall Separating Residences and Lafayette Street

The Mission Garden Townhome community has no walls as such and the main entry to residences face the road directly and are the most impacted. There are several other single family homes on Lafayette street with the same impact, having an entryway directly on the street. This and including other citations of reusing sections of older reports, is all in all absolutely unacceptable and instills distrust. This further shows incompetency of the agency/ agencies preparing this report.

Conclusion: *This project's initial study needs to expand beyond CEQA for approval from the public. The limited scope of CEQA has failed to address the following concerns we have:*

- *Health hazards due to EMF levels.- This is by far the gravest concern and CEQA is clearly not qualified to study that.*
- *Reduced property values- several references provided below.*
- *Loss of Aesthetic appeal for potential real estate buyers/ new and current businesses.*
- *Increase in audible noise levels during and post construction, which is already high in the area with presence of railway line and air traffic route.*
- *Increased fire hazard/ risk of other accidents.*
- *Induced current on railway lines with close proximity/ corona effect- CEQA report did not clearly address this for a 115KV line.*
- *Economic effect on the community from small to larger scale based on all of the above.*

*We demand further investigation and revisit other routes or proposals to resolve the power needs of the city. We have to ensure our and our kids' health is not at stake in the name of development and infrastructure and are not in agreement for this project to move forward**. We cannot approve this to move forward as of now given the lack of study and absence of a satisfactory solution/ mitigation provided in favor/ assurance to public health.***

Additional References:

Research on effects of EMF on humans:

1. ***https://www.ncbi.nlm.nih.gov/pmc/articles/PMC6025786/***

This research reinforces the concerns of EMF exposure effect on human health.

2. ***https://www.epa.gov/radtown/electric-and-magnetic-fields-power-lines***

This resource suggests taking precautions and keeping distance or limiting exposure. Residents would no longer have either of these two options per the current proposals if they are living there 24-7.

What You Can Do

If you are concerned about possible health risks from electric and magnetic fields, you can:

- **Increase the distance between yourself and the source.** The greater the distance between you and the source of EMF, the lower your exposure.
- **Limit the time spent around the source.** The less time you spend near EMF, the lower your exposure.

3. ***https://www.fastexpert.com/blog/should-i-buy-a-house-near-power-lines/***

These are points of view from a real estate expert who clearly states that property value declines proportionately to the distance of the property from high tension lines. People have apprehensions whether or not research clearly defines the risk. Potential buyers might have low priority for a property too close to a high tension power line.

4. ***https://orchard.com/blog/posts/power-lines-and-property-value***

Another research on real estate values lowered due to high tension power lines proximity.

Email: NRS-KRS 115 kV T-Line

From: Punnya Cipson <punnyacipson@gmail.com>
Sent: Friday, August 30, 2024 8:32 AM
To: NRS-KRS Project; mayorandcouncil@santaclaraca.gov; info@siliconvalleypower.com; planningcommission@santaclaraca.gov; manager@santaclaraca.gov; AJackman@santaclaraca.gov
Subject: Concerns Regarding Upcoming High Power Electric Wire Poles in Our Community for the upcoming SVP project connecting the Northern Receiving Station NRS to Kifer receiving station (KRS)- NRS-KRS 115kV Transmission Line Project

To Whomsoever it may concern,

We are residents of Santa Clara that will be negatively impacted by the "NRS-KRS 115kV Transmission Line Project". We have collectively reviewed the draft Initial Study/ Mitigated Negative declaration for "NRS-KRS 115kV Transmission Line Project" from July 2024. After reviewing this report and also attending the virtual and in person meetings, here are some references to emphasize our various concerns.

Reference #1 : CEQA's reporting includes these State reviewing agencies: California Air Resources Board (ARB), California Department of Fish and Wildlife, Bay Delta Region 3 (CDFW), California Department of Forestry and Fire Protection (CAL FIRE), California Department of Parks and Recreation, California Department of Toxic Substances Control (DTSC), California Department of Transportation, District 4 (DOT), California Department of Transportation, Division of Aeronautics (DOT), California Department of Transportation, Division of Transportation Planning (DOT), California Department of Water Resources (DWR), California Energy Commission, California Highway Patrol (CHP), California Native American Heritage Commission (NAHC), California Natural Resources Agency, California Public Utilities Commission (CPUC), California Regional Water Quality Control Board, San Francisco Bay Region 2 (RWQCB), Office of Historic Preservation, State Water Resources Control Board, Division of Drinking Water.

Personal observation#1 : *None of these agencies has any association with human health. CEQA reporting is not qualified enough to force the public to compromise on health concerns. Other agencies need to be involved to review this proposal, that are qualified to study the effect on " humans", not just wildlife and vegetation, or " environment. The checklist is completely devoid of our gravest humanitarian concerns. It is quite shocking that the project has not included any study to understand the potential impact of EMF waves on human lives, given that the transmission lines are potentially less than 60 feet from the closest dwellings. The city of Santa Clara needs to step in and have third party/ independent studies completed in favor of human health.*

Reference #2: Page 41 of report- Section 4.15. Electric and Magnetic Fields summary.

Personal observation#2 : *This consideration was completely absent earlier. Only after the residents raised their voices, this section was added. To our greatest disappointment, this section is copied over from an older report on the "South Loop Reconfiguration Project" from 2020. One would have expected that a new study would have been conducted for a project this size. The lack of due diligence and ignorance towards the specifics of this project are apparent and not acceptable. In fact we have found several sections of this older report as being reused across the entire report.*

The EMP map shared during the in person meeting had several flaws and we would like to question the viability of the study that was completed. What time of the day was the study completed and on what models were the values based on since these were done on assumption for the EMF values that would be there once the project is complete. Since we have seen the several sections of the report redundantly copied over from other reports, we would like a more detailed analysis of this report.

Regarding EMF concerns for human health, there are plenty of scientific studies that do indicate the grave concern on human health with EMF exposures and we cannot ignore this aspect. Here is a reference to an article and there are plenty of articles listed here under references:

https://psc.wi.gov/Documents/Brochures/EMF.pdf

There are not enough references listed in the draft report provided to us, and the explanation provided seems to be conveniently using studies that prove otherwise. This needs more investigation and references. The solution provided as raising the height of the poles and increasing the distance is non-existent. It was confirmed during the in person meeting that the design will not be altered and the height was already designed as required according to the SVP team present there. It seems that the preparers of this report did not even read the report after copying pasting from the old report as evident in the list of proposed solutions is not applicable here.

The live presentation on August 22nd showed the comparison of EMF values of household objects as a means to show that everyday household items carry a similar range of mG(milli Gauss) units. This comparison was inherently flawed since it mentioned that the household devices were producing those level at 1 feet while those indicated for 115KVf lines were at 60 feet. further these household devices do not operate 24X7 similar to the transmission lines.

There were a lot of citations of reports showcasing that no clear proof of EMF to human health exists but we would like to also point out certain states like Connecticut Department of Public Health have cited reports that have shown an increased incidence of childhood leukemia(Blood cancer) at avg exposure of only 3 mG. Also they have called out that some utility workers exposed to high levels of emf have increase risks of Lur Gehrig's disease.

They also call out that most impacts of EMF from high voltage lines dissipate at ~300 feet. These are available on Page 2 & Page 3 of this report: https://portal.ct.gov/-/media/departments-and-agencies/dph/dph/environmental_health/eoha/pdf/emffactsheet2008pdf.pdf

This report has citations from WHO , National Institute of Environmental Health Sciences and California Department of Health Services.

https://www.niehs.nih.gov/sites/default/files/health/materials/electric_and_magnetic_fields_associated_with_the_use_of_electric_power_questions_and_answers_english_508.pdf

Some other questions around the EMF study map shared during presentation on Aug 22 2024:

1. Have you conducted an existing EMF study to identify the current value of the community ?

2. Are your emf study values based on the cumulative, or interference of existing emf and potential emf.

3. Emf value was calculated based on existing studies. What was the delta between mathematical modeling and actual values (from existing structures).

4. What is the delta between underground and overhead structures' emf values?

5. Can you provide the same for Route options B and C?

6. What happens when electrification of rail lines happens- as this is already planned for the future? Have you potentially considered the cumulative EMF effect in coexistence of the high power lines and with railway lines' electrification? Will the EMF values not be much higher then?

7. Can you share the mathematical modeling maps of Emf for 115k, 230k and the next two higher values of the power line ?

8. Can you share Emf maps from existing structures of 115k, 230 k and the next 2 higher values of the power line?

9. Please share any emf related information that you have especially if it contains assumptions for any calculations so we can understand the effects of current project and future projects.

10. Why does the electric pole structure proposed have wider diameter at the top? Can you share the design of the top of the pole ? Can it be extended by adding another section by bolting, welding or any other method? If so, what extra voltage can be added to the line?

11. what is the proposed power consumption of 95054 zip code for the next 5, 10 and 15 years in the master plan ?

Reference #3

Page 174- Section 5.21- Corona and induced current effect:

Personal observation#3

The railway line's proximity to the proposed high transmission lines is very concerning. The centerline distance from proposed lines to railway line is aproximately 50 feet per google maps with some margin for error. As per the report there are no Corona rings proposed for the 115KV lines. There seems to be negligence in design in consideration of the hazards posed by these high voltage lines as Corona effect can transfer current to railway lines. All the residents are at a high risk of accidental hazards given the proximity of the railway line, this project is adding on to the hazards. This section is only stating information about what Corona effect is, as may be required by law, which by the way is again a copy paste from an old report. The only concern discussed in more depth is the audible noise level. The concerns are presented to imply that this is not significant by stating that 115KV lines pose less than significant risk**.**

Reference #4: Post meeting material from March 19th 2024
@https://santaclara.legistar.com/LegislationDetail.aspx?ID=6582415&GUID=E6E14646-3CF7-4D15-BB98-F18580696012&Options=&Search=

Personal observation#4: At surface level, it looks like Option #A was selected only based on Cost perspective, without any consideration to human health, young children, property values, Corona effect, long term sustainability perspective or any other factors. While its important to understand the results of CEQA study, its extremely critical to understand the negative impact of EMF on the many young children living around the proposed transmission lines. Without extensive research and study on the impact to young children and adult heath, we should not be approving such an incomplete proposal.

Page 6 of this document stated that the preferred route A cost of construction is $9.5 million. In discussions with several real estate agents in the region, I have unanimously found all to agree that the real estate values of residences in close proximity to power lines goes down. Its hard to find potential buyers and most folks refrain from buying a house too close to high power transmission lines. There are 1000 plus residences in the area affected by this project. Even if we were to make very rough assumptions, and assume minimal cost reduction in property values and take an average loss of $100,000 per property in the current year, that goes to $100,000,000 of loss of equity to the public. This is not even accounting the businesses affected by this project. This long explanation was to raise a point that if the selection of route A was saving money to the city, this is costing a huge financial loss to the public, which is not acceptable. This decrease in property values will also directly impact the tax collection by the Santa Clara Assessor and result in lower tax revenue coming into the city of Santa Clara.

Reference #5 : Page 49 of report- Figure 5.1-2. Wall separating residences and Lafayette Street.

Personal observation#5: *The picture is taken conveniently from the other side of the railway line which is actually Kingsbury street, inside a private community and not Lafayette street. This is further away from the proposed SVP lines. This is very misleading; see snapshots taken from Google maps below*

And this is what is included on the report:

Figure 5.1-2. Wall Separating Residences and Lafayette Street

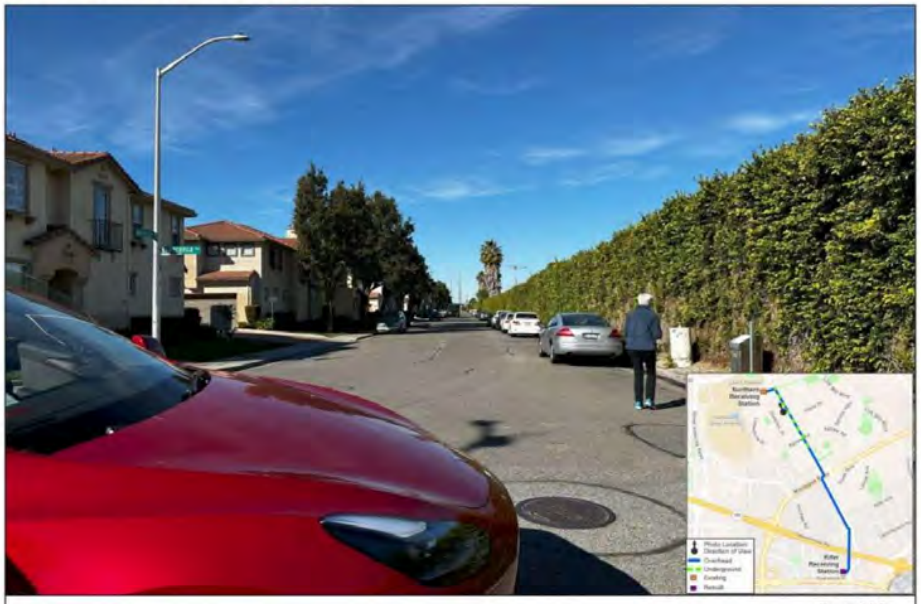

Figure 5.1-2
Wall Separating Residences and Lafayette Street

The Mission Garden Townhome community has no walls as such and the main entry to residences face the road directly and are the most impacted. There are several other single family homes on Lafayette street with the same impact, having an entryway directly on the street. This and including other citations of reusing sections of older reports, is all in all absolutely unacceptable and instills distrust. This further shows incompetency of the agency/ agencies preparing this report.

Conclusion: *This project's initial study needs to expand beyond CEQA for approval from the public. The limited scope of CEQA has failed to address the following concerns we have:*

- *Health hazards due to EMF levels.- This is by far the gravest concern and CEQA is clearly not qualified to study that.*
- *Reduced property values- several references provided below.*
- *Loss of Aesthetic appeal for potential real estate buyers/ new and current businesses.*
- *Increase in audible noise levels during and post construction, which is already high in the area with presence of railway line and air traffic route.*
- *Increased fire hazard/ risk of other accidents.*
- *Induced current on railway lines with close proximity/ corona effect- CEQA report did not clearly address this for a 115KV line.*
- *Economic effect on the community from small to larger scale based on all of the above.*

*We demand further investigation and revisit other routes or proposals to resolve the power needs of the city. We have to ensure our and our kids' health is not at stake in the name of development and infrastructure and are not in agreement for this project to move forward**. We cannot approve this to move forward as of now given the lack of study and absence of a satisfactory solution/ mitigation provided in favor/ assurance to public health.***

Additional References:

Research on effects of EMF on humans:

1. ***https://www.ncbi.nlm.nih.gov/pmc/articles/PMC6025786/***

This research reinforces the concerns of EMF exposure effect on human health.

2. ***https://www.epa.gov/radtown/electric-and-magnetic-fields-power-lines***

This resource suggests taking precautions and keeping distance or limiting exposure. Residents would no longer have either of these two options per the current proposals if they are living there 24-7.

What You Can Do

If you are concerned about possible health risks from electric and magnetic fields, you can:

- **Increase the distance between yourself and the source.** The greater the distance between you and the source of EMF, the lower your exposure.
- **Limit the time spent around the source.** The less time you spend near EMF, the lower your exposure.

3. ***https://www.fastexpert.com/blog/should-i-buy-a-house-near-power-lines/***

These are points of view from a real estate expert who clearly states that property value declines proportionately to the distance of the property from high tension lines. People have apprehensions whether or not research clearly defines the risk. Potential buyers might have low priority for a property too close to a high tension power line.

4. ***https://orchard.com/blog/posts/power-lines-and-property-value***

Another research on real estate values lowered due to high tension power lines proximity.

As a resident in this area, I strongly oppose this proposal (Route A), to build High Power Electric Wire Poles near the dwelling

Thanks
Punnya Ann Joy
2142 Payne Pl,
Santa Clara

Email: NRS-KRS 115 kV T-Line

From: Manali Desai <dmanali.11@gmail.com>
Sent: Friday, August 30, 2024 8:31 AM
To: NRS-KRS Project; mayorandcouncil@santaclaraca.gov; info@siliconvalleypower.com; planningcommission@santaclaraca.gov; manager@santaclaraca.gov; AJackman@santaclaraca.gov
Subject: Concerns Regarding Upcoming High Power Electric Wire Poles in Our Community for the upcoming SVP project connecting the Northern Receiving Station NRS to Kifer receiving station (KRS)- NRS-KRS 115kV Transmission Line Project

To Whomsoever it may concern,

We are residents of Santa Clara that will be negatively impacted by the "NRS-KRS 115kV Transmission Line Project". We have collectively reviewed the draft Initial Study/ Mitigated Negative declaration for "NRS-KRS 115kV Transmission Line Project" from July 2024. After reviewing this report and also attending the virtual and in person meetings, here are some references to emphasize our various concerns.

Reference #1 : CEQA's reporting includes these State reviewing agencies: California Air Resources Board (ARB), California Department of Fish and Wildlife, Bay Delta Region 3 (CDFW), California Department of Forestry and Fire Protection (CAL FIRE), California Department of Parks and Recreation, California Department of Toxic Substances Control (DTSC), California Department of Transportation, District 4 (DOT), California Department of Transportation, Division of Aeronautics (DOT), California Department of Transportation, Division of Transportation Planning (DOT), California Department of Water Resources (DWR), California Energy Commission, California Highway Patrol (CHP), California Native American Heritage Commission (NAHC), California Natural Resources Agency, California Public Utilities Commission (CPUC), California Regional Water Quality Control Board, San Francisco Bay Region 2 (RWQCB), Office of Historic Preservation, State Water Resources Control Board, Division of Drinking Water.

Personal observation#1 : *None of these agencies has any association with human health. CEQA reporting is not qualified enough to force the public to compromise on health concerns. Other agencies need to be involved to review this proposal, that are qualified to study the effect on " humans", not just wildlife and vegetation, or " environment. The checklist is completely devoid of our gravest humanitarian concerns. It is quite shocking that the project has not included any study to understand the potential impact of EMF waves on human lives, given that the transmission lines are potentially less than 60 feet from the closest dwellings. The city of Santa Clara needs to step in and have third party/ independent studies completed in favor of human health.*

Reference #2: Page 41 of report- Section 4.15. Electric and Magnetic Fields summary.

Personal observation#2 : *This consideration was completely absent earlier. Only after the residents raised their voices, this section was added. To our greatest disappointment, this section is copied over from an older report on the "South Loop Reconfiguration Project" from 2020. One would have expected that a new study would have been conducted for a project this size. The lack of due diligence and ignorance towards the specifics of this project are apparent and not acceptable. In fact we have found several sections of this older report as being reused across the entire report.*

The EMP map shared during the in person meeting had several flaws and we would like to question the viability of the study that was completed. What time of the day was the study completed and on what models were the values based on since these were done on assumption for the EMF values that would be there once the project is complete. Since we have seen the several sections of the report redundantly copied over from other reports, we would like a more detailed analysis of this report.

Regarding EMF concerns for human health, there are plenty of scientific studies that do indicate the grave concern on human health with EMF exposures and we cannot ignore this aspect. Here is a reference to an article and there are plenty of articles listed here under references:

https://psc.wi.gov/Documents/Brochures/EMF.pdf

There are not enough references listed in the draft report provided to us, and the explanation provided seems to be conveniently using studies that prove otherwise. This needs more investigation and references. The solution provided as raising the height of the poles and increasing the distance is non-existent. It was confirmed during the in person meeting that the design will not be altered and the height was already designed as required according to the SVP team present there. It seems that the preparers of this report did not even read the report after copying pasting from the old report as evident in the list of proposed solutions is not applicable here.

The live presentation on August 22nd showed the comparison of EMF values of household objects as a means to show that everyday household items carry a similar range of mG(milli Gauss) units. This comparison was inherently flawed since it mentioned that the household devices were producing those level at 1 feet while those indicated for 115KVf lines were at 60 feet. further these household devices do not operate 24X7 similar to the transmission lines.

There were a lot of citations of reports showcasing that no clear proof of EMF to human health exists but we would like to also point out certain states like Connecticut Department of Public Health have cited reports that have shown an increased incidence of childhood leukemia(Blood cancer) at avg exposure of only 3 mG. Also they have called out that some utility workers exposed to high levels of emf have increase risks of Lur Gehrig's disease.

They also call out that most impacts of EMF from high voltage lines dissipate at ~300 feet.

These are available on Page 2 & Page 3 of this report: https://portal.ct.gov/-/media/departments-and-agencies/dph/dph/environmental_health/eoha/pdf/emffactsheet2008pdf.pdf

This report has citations from WHO , National Institute of Environmental Health Sciences and California Department of Health Services.

https://www.niehs.nih.gov/sites/default/files/health/materials/electric_and_magnetic_fields_associated_with_the_use_of_electric_power_questions_and_answers_english_508.pdf

Some other questions around the EMF study map shared during presentation on Aug 22 2024:

1. Have you conducted an existing EMF study to identify the current value of the community ?

2. Are your emf study values based on the cumulative, or interference of existing emf and potential emf.

3. Emf value was calculated based on existing studies. What was the delta between mathematical modeling and actual values (from existing structures).

4. What is the delta between underground and overhead structures' emf values?

5. Can you provide the same for Route options B and C?

6. What happens when electrification of rail lines happens- as this is already planned for the future? Have you potentially considered the cumulative EMF effect in coexistence of the high power lines and with railway lines' electrification? Will the EMF values not be much higher then?

7. Can you share the mathematical modeling maps of Emf for 115k, 230k and the next two higher values of the power line ?

8. Can you share Emf maps from existing structures of 115k, 230 k and the next 2 higher values of the power line?

9. Please share any emf related information that you have especially if it contains assumptions for any calculations so we can understand the effects of current project and future projects.

10. Why does the electric pole structure proposed have wider diameter at the top? Can you share the design of the top of the pole ? Can it be extended by adding another section by bolting, welding or any other method? If so, what extra voltage can be added to the line?

11. what is the proposed power consumption of 95054 zip code for the next 5, 10 and 15 years in the master plan ?

Reference #3

Page 174- Section 5.21- Corona and induced current effect:

Personal observation#3

The railway line's proximity to the proposed high transmission lines is very concerning. The centerline distance from proposed lines to railway line is aproximately 50 feet per google maps with some margin for error. As per the report there are no Corona rings proposed for the 115KV lines. There seems to be negligence in design in consideration of the hazards posed by these high voltage lines as Corona effect can transfer current to railway lines. All the residents are at a high risk of accidental hazards given the proximity of the railway line, this project is adding on to the hazards. This section is only stating information about what Corona effect is, as may be required by law, which by the way is again a copy paste from an old report. The only concern discussed in more depth is the audible noise level. The concerns are presented to imply that this is not significant by stating that 115KV lines pose less than significant risk**.**

Reference #4: Post meeting material from March 19th 2024
@https://santaclara.legistar.com/LegislationDetail.aspx?ID=6582415&GUID=E6E14646-3CF7-4D15-BB98-F18580696012&Options=&Search=

Personal observation#4: At surface level, it looks like Option #A was selected only based on Cost perspective, without any consideration to human health, young children, property values, Corona effect, long term sustainability perspective or any other factors. While its important to understand the results of CEQA study, its extremely critical to understand the negative impact of EMF on the many young children living around the proposed transmission lines. Without extensive research and study on the impact to young children and adult heath, we should not be approving such an incomplete proposal.

Page 6 of this document stated that the preferred route A cost of construction is $9.5 million. In discussions with several real estate agents in the region, I have unanimously found all to agree that the real estate values of residences in close proximity to power lines goes down. Its hard to find potential buyers and most folks refrain from buying a house too close to high power transmission lines. There are 1000 plus residences in the area affected by this project. Even if we were to make very rough assumptions, and assume minimal cost reduction in property values and take an average loss of $100,000 per property in the current year, that goes to $100,000,000 of loss of equity to the public. This is not even accounting the businesses affected by this project. This long explanation was to raise a point that if the selection of route A was saving money to the city, this is costing a huge financial loss to the

public, which is not acceptable. This decrease in property values will also directly impact the tax collection by the Santa Clara Assessor and result in lower tax revenue coming into the city of Santa Clara.

Reference #5 : Page 49 of report- Figure 5.1-2. Wall separating residences and Lafayette Street.

Personal observation#5: *The picture is taken conveniently from the other side of the railway line which is actually Kingsbury street, inside a private community and not Lafayette street. This is further away from the proposed SVP lines. This is very misleading; see snapshots taken from Google maps below*

And this is what is included on the report:

Figure 5.1-2. Wall Separating Residences and Lafayette Street

Figure 5.1-2
Wall Separating Residences and Lafayette Street

The Mission Garden Townhome community has no walls as such and the main entry to residences face the road directly and are the most impacted. There are several other single family homes on Lafayette street with the same impact, having an entryway directly on the street. This and including other citations of reusing sections of older reports, is all in all absolutely unacceptable and instills distrust. This further shows incompetency of the agency/ agencies preparing this report.

Conclusion: *This project's initial study needs to expand beyond CEQA for approval from the public. The limited scope of CEQA has failed to address the following concerns we have:*

- *Health hazards due to EMF levels.- This is by far the gravest concern and CEQA is clearly not qualified to study that.*
- *Reduced property values- several references provided below.*
- *Loss of Aesthetic appeal for potential real estate buyers/ new and current businesses.*
- *Increase in audible noise levels during and post construction, which is already high in the area with presence of railway line and air traffic route.*
- *Increased fire hazard/ risk of other accidents.*
- *Induced current on railway lines with close proximity/ corona effect- CEQA report did not clearly address this for a 115KV line.*
- *Economic effect on the community from small to larger scale based on all of the above.*

*We demand further investigation and revisit other routes or proposals to resolve the power needs of the city. We have to ensure our and our kids' health is not at stake in the name of development and infrastructure and are not in agreement for this project to move forward****. We cannot approve this to move forward as of now given the lack of study and absence of a satisfactory solution/ mitigation provided in favor/ assurance to public health.***

Additional References:

Research on effects of EMF on humans:

1. https://www.ncbi.nlm.nih.gov/pmc/articles/PMC6025786/

This research reinforces the concerns of EMF exposure effect on human health.

2. https://www.epa.gov/radtown/electric-and-magnetic-fields-power-lines

This resource suggests taking precautions and keeping distance or limiting exposure. Residents would no longer have either of these two options per the current proposals if they are living there 24-7.

What You Can Do

If you are concerned about possible health risks from electric and magnetic fields, you can:

- **Increase the distance between yourself and the source.** The greater the distance between you and the source of EMF, the lower your exposure.
- **Limit the time spent around the source.** The less time you spend near EMF, the lower your exposure.

3. ***https://www.fastexpert.com/blog/should-i-buy-a-house-near-power-lines/***

These are points of view from a real estate expert who clearly states that property value declines proportionately to the distance of the property from high tension lines. People have apprehensions whether or not research clearly defines the risk. Potential buyers might have low priority for a property too close to a high tension power line.

4. https://orchard.com/blog/posts/power-lines-and-property-value

Another research on real estate values lowered due to high tension power lines proximity.

Email: NRS-KRS 115 kV T-Line

From: SriVidya Chavali <srividya.chavali@gmail.com>
Sent: Friday, August 30, 2024 8:27 AM
To: NRS-KRS Project; mayorandcouncil@santaclara.gov; info@siliconvalleypower.com; planningcommission@santaclara.gov; manager@santaclara.gov; AJackman@santaclara.gov
Subject: Concerns Regarding Upcoming High Power Electric Wire Poles in Our Community for the upcoming SVP project connecting the Northern Receiving Station NRS to Kifer receiving station (KRS)- NRS-KRS 115kV Transmission Line Project

To Whomsoever it may concern,
We are residents of Santa Clara that will be negatively impacted by the "NRS-KRS 115kV Transmission Line Project". We have collectively reviewed the draft Initial Study/ Mitigated Negative declaration for "NRS-KRS 115kV Transmission Line Project" from July 2024. After reviewing this report and also attending the virtual and in person meetings, here are some references to emphasize our various concerns.

Reference #1 : CEQA's reporting includes these State reviewing agencies: California Air Resources Board (ARB), California Department of Fish and Wildlife, Bay Delta Region 3 (CDFW), California Department of Forestry and Fire Protection (CAL FIRE), California Department of Parks and Recreation, California Department of Toxic Substances Control (DTSC), California Department of Transportation, District 4 (DOT), California Department of Transportation, Division of Aeronautics (DOT), California Department of Transportation, Division of Transportation Planning (DOT), California Department of Water Resources (DWR), California Energy Commission, California Highway Patrol (CHP), California Native American Heritage Commission (NAHC), California Natural Resources Agency, California Public Utilities Commission (CPUC), California Regional Water Quality Control Board, San Francisco Bay Region 2 (RWQCB), Office of Historic Preservation, State Water Resources Control Board, Division of Drinking Water.

Personal observation#1 : *None of these agencies has any association with human health. CEQA reporting is not qualified enough to force the public to compromise on health concerns. Other agencies need to be involved to review this proposal, that are qualified to study the effect on " humans", not just wildlife and vegetation, or " environment. The checklist is completely devoid of our gravest humanitarian concerns. It is quite shocking that the project has not included any study to understand the potential impact of EMF waves on human lives, given that the transmission lines are potentially less than 60 feet from the closest dwellings. The city of Santa Clara needs to step in and have third party/ independent studies completed in favor of human health.*

Reference #2: Page 41 of report- Section 4.15. Electric and Magnetic Fields summary.

Personal observation#2 : *This consideration was completely absent earlier. Only after the residents raised their voices, this section was added. To our greatest disappointment, this section is copied over from an older report on the "South Loop Reconfiguration Project" from 2020. One would have expected that a new study would have been conducted for a project this size. The lack of due diligence and ignorance towards the specifics of this project are apparent and not acceptable. In fact we have found several sections of this older report as being reused across the entire report.*

The EMP map shared during the in person meeting had several flaws and we would like to question the viability of the study that was completed. What time of the day was the study completed and on what models were the values based on since these were done on assumption for the EMF values that would be there once the project is complete. Since we have seen the several sections of the report redundantly copied over from other reports, we would like a more detailed analysis of this report.

Regarding EMF concerns for human health, there are plenty of scientific studies that do indicate the grave concern on human health with EMF exposures and we cannot ignore this aspect. Here is a reference to an article and there are plenty of articles listed here under references:

https://psc.wi.gov/Documents/Brochures/EMF.pdf

There are not enough references listed in the draft report provided to us, and the explanation provided seems to be conveniently using studies that prove otherwise. This needs more investigation and references. The solution provided as raising the height of the poles and increasing the distance is non-existent. It was confirmed during the in person meeting that the design will not be altered and the height was already designed as required according to the SVP team present there. It seems that the preparers of this report did not even read the report after copying pasting from the old report as evident in the list of proposed solutions is not applicable here.

The live presentation on August 22nd showed the comparison of EMF values of household objects as a means to show that everyday household items carry a similar range of mG(milli Gauss) units. This comparison was inherently flawed since it mentioned that the household devices were producing those level at 1 feet while those indicated for 115KVf lines were at 60 feet. further these household devices do not operate 24X7 similar to the transmission lines.

There were a lot of citations of reports showcasing that no clear proof of EMF to human health exists but we would like to also point out certain states like Connecticut Department of Public Health have cited reports that have shown an increased incidence of childhood leukemia(Blood cancer) at avg exposure of only 3 mG. Also they have called out that some utility workers exposed to high levels of emf have increase risks of Lur Gehrig's disease.

They also call out that most impacts of EMF from high voltage lines dissipate at ~300 feet.

These are available on Page 2 & Page 3 of this report: https://portal.ct.gov/-/media/departments-and-agencies/dph/dph/environmental_health/eoha/pdf/emffactsheet2008pdf.pdf

This report has citations from WHO , National Institute of Environmental Health Sciences and California Department of Health Services.

https://www.niehs.nih.gov/sites/default/files/health/materials/electric_and_magnetic_fields_associated_with_the_use_of_electric_power_questions_and_answers_english_508.pdf

Some other questions around the EMF study map shared during presentation on Aug 22 2024:

1. Have you conducted an existing EMF study to identify the current value of the community ?

2. Are your emf study values based on the cumulative, or interference of existing emf and potential emf.

3. â• Emf value was calculated based on existing studies. What was the delta between mathematical modeling and actual values (from existing structures).

4. â• What is the delta between underground and overhead structures' emf values?

5. â• Can you provide the same for Route options B and C?

6. â• What happens when electrification of rail lines happens- as this is already planned for the future? Have you potentially considered the cumulative EMF effect in coexistence of the high power lines and with railway lines' electrification? Will the EMF values not be much higher then?

7. â• Can you share the mathematical modeling maps of Emf for 115k, 230k and the next two higher values of the power line ?

8. â• Can you share Emf maps from existing structures of 115k, 230 k and the next 2 higher values of the power line?

9. â• Please share any emf related information that you have especially if it contains assumptions for any calculations so we can understand the effects of current project and future projects.

10. Why does the electric pole structure proposed have wider diameter at the top? Can you share the design of the top of the pole ? Can it be extended by adding another section by bolting, welding or any other method? If so, what extra voltage can be added to the line?

11. â• what is the proposed power consumption of 95054 zip code for the next 5, 10 and 15 years in the master plan ?

Reference #3

Page 174- Section 5.21- Corona and induced current effect:

Personal observation#3

The railway line's proximity to the proposed high transmission lines is very concerning. The centerline distance from proposed lines to railway line is aproximately 50 feet per google maps with some margin for error. As per the report there are no Corona rings proposed for the 115KV lines. There seems to be negligence in design in consideration of the hazards posed by these high voltage lines as Corona effect can transfer current to railway lines. All the residents are at a high risk of accidental hazards given the proximity of the railway line, this project is adding on to the hazards. This section is only stating information about what Corona effect is, as may be required by law, which by the way is again a copy paste from an old report. The only concern discussed in more depth is the audible noise level. The concerns are presented to imply that this is not significant by stating that 115KV lines pose less than significant risk**.**

Reference #4: Post meeting material from March 19th 2024
@https://santaclara.legistar.com/LegislationDetail.aspx?ID=6582415&GUID=E6E14646-3CF7-4D15-BB98-F18580696012&Options=&Search=

Personal observation#4: At surface level, it looks like Option #A was selected only based on Cost perspective, without any consideration to human health, young children, property values, Corona effect, long term sustainability perspective or any other factors. While its important to understand the results of CEQA study, its extremely critical to understand the negative impact of EMF on the many young children living around the proposed transmission lines. Without extensive research and study on the impact to young children and adult heath, we should not be approving such an incomplete proposal.

Page 6 of this document stated that the preferred route A cost of construction is $9.5 million. In discussions with several real estate agents in the region, I have unanimously found all to agree that the real estate values of residences in close proximity to power lines goes down. Its hard to find potential buyers and most folks refrain from buying a house too close to high power transmission lines. There are 1000 plus residences in the area affected by this project. Even if we were to make very rough assumptions, and assume minimal cost reduction in property values and take an average loss of $100,000 per property in the current year, that goes to $100,000,000 of loss of equity to the public. This is not even accounting the businesses affected by this project. This long explanation was to raise a point that if the selection of route A was saving money to the city, this is costing a huge financial loss to the public, which is not acceptable. This decrease in property values will also directly impact the tax collection by the Santa Clara Assessor and result in lower tax revenue coming into the city of Santa Clara.

Reference #5 : Page 49 of report- Figure 5.1-2. Wall separating residences and Lafayette Street.

Personal observation#5: *The picture is taken conveniently from the other side of the railway line which is actually Kingsbury street, inside a private community and not Lafayette street. This is further away from the proposed SVP lines. This is very misleading; see snapshots taken from Google maps below*

-

And this is what is included on the report:

The Mission Garden Townhome community has no walls as such and the main entry to residences face the road directly and are the most impacted. There are several other single family homes on Lafayette street with the same impact, having an entryway directly on the street. This and including other citations of reusing sections of older reports, is all in all absolutely unacceptable and instills distrust. This further shows incompetency of the agency/ agencies preparing this report.

Conclusion: *This project's initial study needs to expand beyond CEQA for approval from the public. The limited scope of CEQA has failed to address the following concerns we have:*

- *Health hazards due to EMF levels.- This is by far the gravest concern and CEQA is clearly not qualified to study that.*
- *Reduced property values- several references provided below.*
- *Loss of Aesthetic appeal for potential real estate buyers/ new and current businesses.*
- *Increase in audible noise levels during and post construction, which is already high in the area with presence of railway line and air traffic route.*
- *Increased fire hazard/ risk of other accidents.*
- *Induced current on railway lines with close proximity/ corona effect- CEQA report did not clearly address this for a 115KV line.*
- *Economic effect on the community from small to larger scale based on all of the above.*

*We demand further investigation and revisit other routes or proposals to resolve the power needs of the city. We have to ensure our and our kids' health is not at stake in the name of development and infrastructure and are not in agreement for this project to move forward**. We cannot approve this to move forward as of now given the lack of study and absence of a satisfactory solution/ mitigation provided in favor/ assurance to public health.***

Additional References:

Research on effects of EMF on humans:

1. ***https://www.ncbi.nlm.nih.gov/pmc/articles/PMC6025786/***

This research reinforces the concerns of EMF exposure effect on human health.

2. ***https://www.epa.gov/radtown/electric-and-magnetic-fields-power-lines***

This resource suggests taking precautions and keeping distance or limiting exposure. Residents would no longer have either of these two options per the current proposals if they are living there 24-7.

3. ***https://www.fastexpert.com/blog/should-i-buy-a-house-near-power-lines/***

These are points of view from a real estate expert who clearly states that property value declines proportionately to the distance of the property from high tension lines. People have

apprehensions whether or not research clearly defines the risk. Potential buyers might have low priority for a property too close to a high tension power line.

4. ***https://orchard.com/blog/posts/power-lines-and-property-value***

Another research on real estate values lowered due to high tension power lines proximity.

Figure 5.1-2. Wall Separating Residences and Lafayette Street

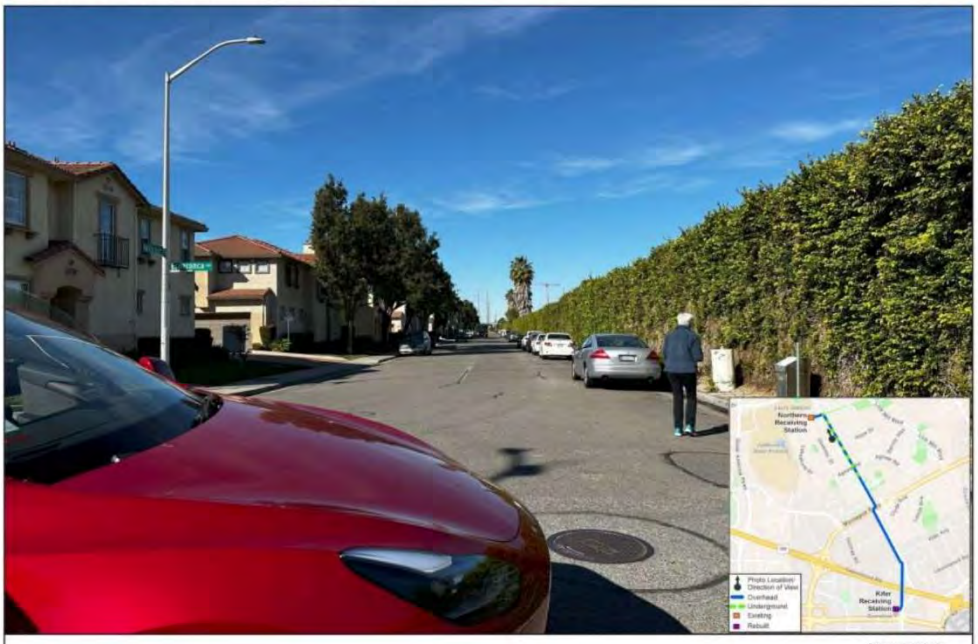

Figure 5.1-2

Wall Separating Residences and Lafayette Street

What You Can Do

If you are concerned about possible health risks from electric and magnetic fields, you can:

- **Increase the distance between yourself and the source.** The greater the distance between you and the source of EMF, the lower your exposure.
- **Limit the time spent around the source.** The less time you spend near EMF, the lower your exposure.

Email: NRS-KRS 115 kV T-Line

From: Hima Sree MC <himahari@gmail.com>
Sent: Friday, August 30, 2024 8:05 AM
To: NRS-KRS Project; mayorandcouncil@santaclaraca.gov; info@siliconvalleypower.com; planningcommission@santaclaraca.gov; manager@santaclaraca.gov; AJackman@santaclaraca.gov
Subject: Concerns Regarding Upcoming High Power Electric Wire Poles in Our Community for the upcoming SVP project connecting the Northern Receiving Station NRS to Kifer receiving station (KRS)- NRS-KRS 115kV Transmission Line Project

To Whomsoever it may concern,

We are residents of Santa Clara that will be negatively impacted by the "NRS-KRS 115kV Transmission Line Project". We have collectively reviewed the draft Initial Study/ Mitigated Negative declaration for "NRS-KRS 115kV Transmission Line Project" from July 2024. After reviewing this report and also attending the virtual and in person meetings, here are some references to emphasize our various concerns.

Reference #1 : CEQA's reporting includes these State reviewing agencies: California Air Resources Board (ARB), California Department of Fish and Wildlife, Bay Delta Region 3 (CDFW), California Department of Forestry and Fire Protection (CAL FIRE), California Department of Parks and Recreation, California Department of Toxic Substances Control (DTSC), California Department of Transportation, District 4 (DOT), California Department of Transportation, Division of Aeronautics (DOT), California Department of Transportation, Division of Transportation Planning (DOT), California Department of Water Resources (DWR), California Energy Commission, California Highway Patrol (CHP), California Native American Heritage Commission (NAHC), California Natural Resources Agency, California Public Utilities Commission (CPUC), California Regional Water Quality Control Board, San Francisco Bay Region 2 (RWQCB), Office of Historic Preservation, State Water Resources Control Board, Division of Drinking Water.

Personal observation#1 : *None of these agencies has any association with human health. CEQA reporting is not qualified enough to force the public to compromise on health concerns. Other agencies need to be involved to review this proposal, that are qualified to study the effect on " humans", not just wildlife and vegetation, or " environment. The checklist is completely devoid of our gravest humanitarian concerns. It is quite shocking that the project has not included any study to understand the potential impact of EMF waves on human lives, given that the transmission lines are potentially less than 60 feet from the closest dwellings. The city of Santa Clara needs to step in and have third party/ independent studies completed in favor of human health.*

Reference #2: Page 41 of report- Section 4.15. Electric and Magnetic Fields summary.

Personal observation#2 : *This consideration was completely absent earlier. Only after the residents raised their voices, this section was added. To our greatest disappointment, this section is copied over from an older report on the "South Loop Reconfiguration Project" from 2020. One would have expected that a new study would have been conducted for a project this size. The lack of due diligence and ignorance towards the specifics of this project are apparent and not acceptable. In fact we have found several sections of this older report as being reused across the entire report.*

The EMP map shared during the in person meeting had several flaws and we would like to question the viability of the study that was completed. What time of the day was the study completed and on what models were the values based on since these were done on assumption for the EMF values that would be there once the project is complete. Since we have seen the several sections of the report redundantly copied over from other reports, we would like a more detailed analysis of this report.

Regarding EMF concerns for human health, there are plenty of scientific studies that do indicate the grave concern on human health with EMF exposures and we cannot ignore this aspect. Here is a reference to an article and there are plenty of articles listed here under references:

https://psc.wi.gov/Documents/Brochures/EMF.pdf

There are not enough references listed in the draft report provided to us, and the explanation provided seems to be conveniently using studies that prove otherwise. This needs more investigation and references. The solution provided as raising the height of the poles and increasing the distance is non-existent. It was confirmed during the in person meeting that the design will not be altered and the height was already designed as required according to the SVP team present there. It seems that the preparers of this report did not even read the report after copying pasting from the old report as evident in the list of proposed solutions is not applicable here.

The live presentation on August 22nd showed the comparison of EMF values of household objects as a means to show that everyday household items carry a similar range of mG(milli Gauss) units. This comparison was inherently flawed since it mentioned that the household devices were producing those level at 1 feet while those indicated for 115KVf lines were at 60 feet. further these household devices do not operate 24X7 similar to the transmission lines.

There were a lot of citations of reports showcasing that no clear proof of EMF to human health exists but we would like to also point out certain states like Connecticut Department of Public Health have cited reports that have shown an increased incidence of childhood leukemia(Blood cancer) at avg exposure of only 3 mG. Also they have called out that some utility workers exposed to high levels of emf have increase risks of Lur Gehrig's disease.

They also call out that most impacts of EMF from high voltage lines dissipate at ~300 feet.

These are available on Page 2 & Page 3 of this report: https://portal.ct.gov/-/media/departments-and-agencies/dph/dph/environmental_health/eoha/pdf/emffactsheet2008pdf.pdf

This report has citations from WHO , National Institute of Environmental Health Sciences and California Department of Health Services.

https://www.niehs.nih.gov/sites/default/files/health/materials/electric_and_magnetic_fields_associated_with_the_use_of_electric_power_questions_and_answers_english_508.pdf

Some other questions around the EMF study map shared during presentation on Aug 22 2024:

1. Have you conducted an existing EMF study to identify the current value of the community ?

2. Are your emf study values based on the cumulative, or interference of existing emf and potential emf.

3. Emf value was calculated based on existing studies. What was the delta between mathematical modeling and actual values (from existing structures).

4. What is the delta between underground and overhead structures' emf values?

5. Can you provide the same for Route options B and C?

6. What happens when electrification of rail lines happens- as this is already planned for the future? Have you potentially considered the cumulative EMF effect in coexistence of the high power lines and with railway lines' electrification? Will the EMF values not be much higher then?

7. Can you share the mathematical modeling maps of Emf for 115k, 230k and the next two higher values of the power line ?

8. Can you share Emf maps from existing structures of 115k, 230 k and the next 2 higher values of the power line?

9. Please share any emf related information that you have especially if it contains assumptions for any calculations so we can understand the effects of current project and future projects.

10. Why does the electric pole structure proposed have wider diameter at the top? Can you share the design of the top of the pole ? Can it be extended by adding another section by bolting, welding or any other method? If so, what extra voltage can be added to the line?

11. what is the proposed power consumption of 95054 zip code for the next 5, 10 and 15 years in the master plan ?

Reference #3

Page 174- Section 5.21- Corona and induced current effect:

Personal observation#3

The railway line's proximity to the proposed high transmission lines is very concerning. The centerline distance from proposed lines to railway line is aproximately 50 feet per google maps with some margin for error. As per the report there are no Corona rings proposed for the 115KV lines. There seems to be negligence in design in consideration of the hazards posed by these high voltage lines as Corona effect can transfer current to railway lines. All the residents are at a high risk of accidental hazards given the proximity of the railway line, this project is adding on to the hazards. This section is only stating information about what Corona effect is, as may be required by law, which by the way is again a copy paste from an old report. The only concern discussed in more depth is the audible noise level. The concerns are presented to imply that this is not significant by stating that 115KV lines pose less than significant risk**.**

Reference #4: Post meeting material from March 19th 2024
@https://santaclara.legistar.com/LegislationDetail.aspx?ID=6582415&GUID=E6E14646-3CF7-4D15-BB98-F18580696012&Options=&Search=

Personal observation#4: At surface level, it looks like Option #A was selected only based on Cost perspective, without any consideration to human health, young children, property values, Corona effect, long term sustainability perspective or any other factors. While its important to understand the results of CEQA study, its extremely critical to understand the negative impact of EMF on the many young children living around the proposed transmission lines. Without extensive research and study on the impact to young children and adult heath, we should not be approving such an incomplete proposal.

Page 6 of this document stated that the preferred route A cost of construction is $9.5 million. In discussions with several real estate agents in the region, I have unanimously found all to agree that the real estate values of residences in close proximity to power lines goes down. Its hard to find potential buyers and most folks refrain from buying a house too close to high power transmission lines. There are 1000 plus residences in the area affected by this project. Even if we were to make very rough assumptions, and assume minimal cost reduction in property values and take an average loss of $100,000 per property in the current year, that goes to $100,000,000 of loss of equity to the public. This is not even accounting the businesses affected by this project. This long explanation was to raise a point that if the selection of route A was saving money to the city, this is costing a huge financial loss to the

public, which is not acceptable. This decrease in property values will also directly impact the tax collection by the Santa Clara Assessor and result in lower tax revenue coming into the city of Santa Clara.

Reference #5 : Page 49 of report- Figure 5.1-2. Wall separating residences and Lafayette Street.

Personal observation#5: *The picture is taken conveniently from the other side of the railway line which is actually Kingsbury street, inside a private community and not Lafayette street. This is further away from the proposed SVP lines. This is very misleading; see snapshots taken from Google maps below*

Figure 5.1-2. Wall Separating Residences and Lafayette Street

Figure 5.1-2

Wall Separating Residences and Lafayette Street

What You Can Do

If you are concerned about possible health risks from electric and magnetic fields, you can:

- **Increase the distance between yourself and the source.** The greater the distance between you and the source of EMF, the lower your exposure.
- **Limit the time spent around the source.** The less time you spend near EMF, the lower your exposure.

*We demand further investigation and revisit other routes or proposals to resolve the power needs of the city. We have to ensure our and our kids' health is not at stake in the name of development and infrastructure and are not in agreement for this project to move forward**. We cannot approve this to move forward as of now given the lack of study and absence of a satisfactory solution/ mitigation provided in favor/ assurance to public health.***

Additional References:

Research on effects of EMF on humans:

1. ***https://www.ncbi.nlm.nih.gov/pmc/articles/PMC6025786/***

This research reinforces the concerns of EMF exposure effect on human health.

2. ***https://www.epa.gov/radtown/electric-and-magnetic-fields-power-lines***

This resource suggests taking precautions and keeping distance or limiting exposure. Residents would no longer have either of these two options per the current proposals if they are living there 24-7.

3. ***https://www.fastexpert.com/blog/should-i-buy-a-house-near-power-lines/***

These are points of view from a real estate expert who clearly states that property value declines proportionately to the distance of the property from high tension lines. People have apprehensions whether or not research clearly defines the risk. Potential buyers might have low priority for a property too close to a high tension power line.

4. ***https://orchard.com/blog/posts/power-lines-and-property-value***

Another research on real estate values lowered due to high tension power lines proximity.

:-P **Smile.....And the world smiles with you** :-P

Email: NRS-KRS 115 kV T-Line

From: Lakshmikanth Chowdary Pothula <plkchowdary@gmail.com>
Sent: Friday, August 30, 2024 7:12 AM
To: NRS-KRS Project; mayorandcouncil@santaclaraca.gov; info@siliconvalleypower.com; planningcommission@santaclaraca.gov; manager@santaclaraca.gov; AJackman@santaclaraca.gov
Subject: Subject: Concerns Regarding Upcoming High Power Electric Wire Poles in Our Community for the upcoming SVP project connecting the Northern Receiving Station NRS to Kifer receiving station (KRS)- NRS-KRS 115kV Transmission Line Project

To Whomsoever it may concern,
We are residents of Santa Clara that will be negatively impacted by the "NRS-KRS 115kV Transmission Line Project". We have collectively reviewed the draft Initial Study/ Mitigated Negative declaration for "NRS-KRS 115kV Transmission Line Project" from July 2024. After reviewing this report and also attending the virtual and in person meetings, here are some references to emphasize our various concerns.
Reference #1 : CEQA's reporting includes these State reviewing agencies: California Air Resources Board (ARB), California Department of Fish and Wildlife, Bay Delta Region 3 (CDFW), California Department of Forestry and Fire Protection (CAL FIRE), California Department of Parks and Recreation, California Department of Toxic Substances Control (DTSC), California Department of Transportation, District 4 (DOT), California Department of Transportation, Division of Aeronautics (DOT), California Department of Transportation, Division of Transportation Planning (DOT), California Department of Water Resources (DWR), California Energy Commission, California Highway Patrol (CHP), California Native American Heritage Commission (NAHC), California Natural Resources Agency, California Public Utilities Commission (CPUC), California Regional Water Quality Control Board, San Francisco Bay Region 2 (RWQCB), Office of Historic Preservation, State Water Resources Control Board, Division of Drinking Water.
Personal observation#1 : *None of these agencies has any association with human health. CEQA reporting is not qualified enough to force the public to compromise on health concerns. Other agencies need to be involved to review this proposal, that are qualified to study the effect on " humans", not just wildlife and vegetation, or " environment. The checklist is completely devoid of our gravest humanitarian concerns. It is quite shocking that the project has not included any study to understand the potential impact of EMF waves on human lives, given that the transmission lines are potentially less than 60 feet from the closest dwellings. The city of Santa Clara needs to step in and have third party/ independent studies completed in favor of human health.*
Reference #2: Page 41 of report- Section 4.15. Electric and Magnetic Fields summary.
Personal observation#2 : *This consideration was completely absent earlier. Only after the residents raised their voices, this section was added. To our greatest disappointment, this section is copied over from an older report on the "South Loop Reconfiguration Project" from 2020. One would have expected that a new study would have been conducted for a project this size. The lack of due diligence and ignorance towards the specifics of this project are apparent and not acceptable. In fact we have found several sections of this older report as being reused across the entire report.*
The EMP map shared during the in person meeting had several flaws and we would like to question the viability of the study that was completed. What time of the day was the study completed and on what models were the values based on since these were done on assumption for the EMF values that would be there once the project is complete. Since we have seen the several sections of the report redundantly copied over from other reports, we would like a more detailed analysis of this report.
Regarding EMF concerns for human health, there are plenty of scientific studies that do indicate the grave concern on human health with EMF exposures and we cannot ignore this aspect. Here is a reference to an article and there are plenty of articles listed here under references:
https://psc.wi.gov/Documents/Brochures/EMF.pdf

There are not enough references listed in the draft report provided to us, and the explanation provided seems to be conveniently using studies that prove otherwise. This needs more investigation and references. The solution provided as raising the height of the poles and increasing the distance is non-existent. It was confirmed during the in person meeting that the design will not be altered and the height was already designed as required according to the SVP team present there. It seems that the preparers of this report did not even read the report after copying pasting from the old report as evident in the list of proposed solutions is not applicable here.

The live presentation on August 22nd showed the comparison of EMF values of household objects as a means to show that everyday household items carry a similar range of mG(milli Gauss) units. This comparison was inherently flawed since it mentioned that the household devices were producing those level at 1 feet while those indicated for 115KVf lines were at 60 feet. further these household devices do not operate 24X7 similar to the transmission lines.

There were a lot of citations of reports showcasing that no clear proof of EMF to human health exists but we would like to also point out certain states like Connecticut Department of Public Health have cited reports that have shown an increased incidence of childhood leukemia(Blood cancer) at avg exposure of only 3 mG. Also they have called out that some utility workers exposed to high levels of emf have increase risks of Lur Gehrig's disease.

They also call out that most impacts of EMF from high voltage lines dissipate at ~300 feet.

These are available on Page 2 & Page 3 of this report: https://portal.ct.gov/-/media/departments-and-agencies/dph/dph/environmental_health/eoha/pdf/emffactsheet2008pdf.pdf

This report has citations from WHO , National Institute of Environmental Health Sciences and California Department of Health Services.

https://www.niehs.nih.gov/sites/default/files/health/materials/electric_and_magnetic_fields_associated_with_the_use_of_electric_power_questions_and_answers_english_508.pdf

Some other questions around the EMF study map shared during presentation on Aug 22 2024:

1. Have you conducted an existing EMF study to identify the current value of the community ?
2. Are your emf study values based on the cumulative, or interference of existing emf and potential emf.
3. Emf value was calculated based on existing studies. What was the delta between mathematical modeling and actual values (from existing structures).
4. What is the delta between underground and overhead structures' emf values?
5. Can you provide the same for Route options B and C?
6. What happens when electrification of rail lines happens- as this is already planned for the future? Have you potentially considered the cumulative EMF effect in coexistence of the high power lines and with railway lines' electrification? Will the EMF values not be much higher then?
7. Can you share the mathematical modeling maps of Emf for 115k, 230k and the next two higher values of the power line ?
8. Can you share Emf maps from existing structures of 115k, 230 k and the next 2 higher values of the power line?
9. Please share any emf related information that you have especially if it contains assumptions for any calculations so we can understand the effects of current project and future projects.
10. Why does the electric pole structure proposed have wider diameter at the top? Can you share the design of the top of the pole ? Can it be extended by adding another section by bolting, welding or any other method? If so, what extra voltage can be added to the line?
11. what is the proposed power consumption of 95054 zip code for the next 5, 10 and 15 years in the master plan ?

Reference #3

Page 174- Section 5.21- Corona and induced current effect:

Personal observation#3

The railway line's proximity to the proposed high transmission lines is very concerning. The centerline distance from proposed lines to railway line is aproximately 50 feet per google maps with some margin for error. As per the report there are no Corona rings proposed for the 115KV lines. There seems to be negligence in design in consideration of the hazards posed by these high voltage lines as Corona effect

can transfer current to railway lines. All the residents are at a high risk of accidental hazards given the proximity of the railway line, this project is adding on to the hazards. This section is only stating information about what Corona effect is, as may be required by law, which by the way is again a copy paste from an old report. The only concern discussed in more depth is the audible noise level. The concerns are presented to imply that this is not significant by stating that 115KV lines pose less than significant risk**.**

Reference #4: Post meeting material from March 19th 2024 @https://santaclara.legistar.com/LegislationDetail.aspx?ID=6582415&GUID=E6E14646-3CF7-4D15-BB98-F18580696012&Options=&Search=

Personal observation#4: At surface level, it looks like Option #A was selected only based on Cost perspective, without any consideration to human health, young children, property values, Corona effect, long term sustainability perspective or any other factors. While its important to understand the results of CEQA study, its extremely critical to understand the negative impact of EMF on the many young children living around the proposed transmission lines. Without extensive research and study on the impact to young children and adult heath, we should not be approving such an incomplete proposal.

Page 6 of this document stated that the preferred route A cost of construction is $9.5 million. In discussions with several real estate agents in the region, I have unanimously found all to agree that the real estate values of residences in close proximity to power lines goes down. Its hard to find potential buyers and most folks refrain from buying a house too close to high power transmission lines. There are 1000 plus residences in the area affected by this project. Even if we were to make very rough assumptions, and assume minimal cost reduction in property values and take an average loss of $100,000 per property in the current year, that goes to $100,000,000 of loss of equity to the public. This is not even accounting the businesses affected by this project. This long explanation was to raise a point that if the selection of route A was saving money to the city, this is costing a huge financial loss to the public, which is not acceptable. This decrease in property values will also directly impact the tax collection by the Santa Clara Assessor and result in lower tax revenue coming into the city of Santa Clara.

Reference #5 : Page 49 of report- Figure 5.1-2. Wall separating residences and Lafayette Street.

Personal observation#5: *The picture is taken conveniently from the other side of the railway line which is actually Kingsbury street, inside a private community and not Lafayette street. This is further away from the proposed SVP lines. This is very misleading; see snapshots taken from Google maps below*

And this is what is included on the report:

The Mission Garden Townhome community has no walls as such and the main entry to residences face the road directly and are the most impacted. There are several other single family homes on Lafayette street with the same impact, having an entryway directly on the street. This and including other citations of reusing sections of older reports, is all in all absolutely unacceptable and instills distrust. This further shows incompetency of the agency/ agencies preparing this report.

Conclusion: *This project's initial study needs to expand beyond CEQA for approval from the public. The limited scope of CEQA has failed to address the following concerns we have:*

- *Health hazards due to EMF levels.- This is by far the gravest concern and CEQA is clearly not qualified to study that.*
- *Reduced property values- several references provided below.*
- *Loss of Aesthetic appeal for potential real estate buyers/ new and current businesses.*
- *Increase in audible noise levels during and post construction, which is already high in the area with presence of railway line and air traffic route.*
- *Increased fire hazard/ risk of other accidents.*
- *Induced current on railway lines with close proximity/ corona effect- CEQA report did not clearly address this for a 115KV line.*
- *Economic effect on the community from small to larger scale based on all of the above.*

We demand further investigation and revisit other routes or proposals to resolve the power needs of the city. We have to ensure our and our kids' health is not at stake in the name of development and

*infrastructure and are not in agreement for this project to move forward**. We cannot approve this to move forward as of now given the lack of study and absence of a satisfactory solution/ mitigation provided in favor/ assurance to public health.***

Additional References:
Research on effects of EMF on humans:
1. ***https://www.ncbi.nlm.nih.gov/pmc/articles/PMC6025786/***
This research reinforces the concerns of EMF exposure effect on human health.
2. ***https://www.epa.gov/radtown/electric-and-magnetic-fields-power-lines***
This resource suggests taking precautions and keeping distance or limiting exposure. Residents would no longer have either of these two options per the current proposals if they are living there 24-7.

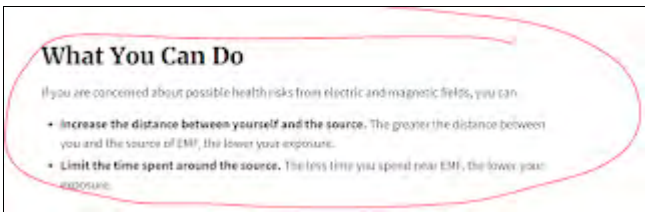
What You Can Do

If you are concerned about possible health risks from electric and magnetic fields, you can

- **Increase the distance between yourself and the source.** The greater the distance between you and the source of EMF, the lower your exposure.
- **Limit the time spent around the source.** The less time you spend near EMF, the lower your exposure.

3. ***https://www.fastexpert.com/blog/should-i-buy-a-house-near-power-lines/***
These are points of view from a real estate expert who clearly states that property value declines proportionately to the distance of the property from high tension lines. People have apprehensions whether or not research clearly defines the risk. Potential buyers might have low priority for a property too close to a high tension power line.
4. ***https://orchard.com/blog/posts/power-lines-and-property-value***
Another research on real estate values lowered due to high tension power lines proximity

Email: NRS-KRS 115 kV T-Line

From: Sith Thuon <sith.thuon@gmail.com>
Sent: Thursday, August 29, 2024 10:36 PM
To: NRS-KRS Project; mayorandcouncil@santaclaraca.gov; info@siliconvalleypower.com; planningcommission@santaclaraca.gov; manager@santaclaraca.gov; AJackman@santaclaraca.gov
Subject: Concerns Regarding Upcoming High Power Electric Wire Poles in Our Community for the upcoming SVP project connecting the Northern Receiving Station NRS to Kifer receiving station (KRS)- NRS-KRS 115kV Transmission Line Project

To Whomsoever it may concern,

We are residents of Santa Clara that will be negatively impacted by the "NRS-KRS 115kV Transmission Line Project". We have collectively reviewed the draft Initial Study/ Mitigated Negative declaration for "NRS-KRS 115kV Transmission Line Project" from July 2024. After reviewing this report and also attending the virtual and in person meetings, here are some references to emphasize our various concerns.

Reference #1 : CEQA's reporting includes these State reviewing agencies: California Air Resources Board (ARB), California Department of Fish and Wildlife, Bay Delta Region 3 (CDFW), California Department of Forestry and Fire Protection (CAL FIRE), California Department of Parks and Recreation, California Department of Toxic Substances Control (DTSC), California Department of Transportation, District 4 (DOT), California Department of Transportation, Division of Aeronautics (DOT), California Department of Transportation, Division of Transportation Planning (DOT), California Department of Water Resources (DWR), California Energy Commission, California Highway Patrol (CHP), California Native American Heritage Commission (NAHC), California Natural Resources Agency, California Public Utilities Commission (CPUC), California Regional Water Quality Control Board, San Francisco Bay Region 2 (RWQCB), Office of Historic Preservation, State Water Resources Control Board, Division of Drinking Water.

Personal observation#1 : *None of these agencies has any association with human health. CEQA reporting is not qualified enough to force the public to compromise on health concerns. Other agencies need to be involved to review this proposal, that are qualified to study the effect on " humans", not just wildlife and vegetation, or " environment. The checklist is completely devoid of our gravest humanitarian concerns. It is quite shocking that the project has not included any study to understand the potential impact of EMF waves on human lives, given that the transmission lines are potentially less than 60 feet from the closest dwellings. The city of Santa Clara needs to step in and have third party/ independent studies completed in favor of human health.*

Reference #2: Page 41 of report- Section 4.15. Electric and Magnetic Fields summary.

Personal observation#2 : *This consideration was completely absent earlier. Only after the residents raised their voices, this section was added. To our greatest disappointment, this section is copied over from an older report on the "South Loop Reconfiguration Project" from 2020. One would have expected that a new study would have been conducted for a project this size. The lack of due diligence and ignorance towards the specifics of this project are apparent and not acceptable. In fact we have found several sections of this older report as being reused across the entire report.*

The EMP map shared during the in person meeting had several flaws and we would like to question the viability of the study that was completed. What time of the day was the study completed and on what models were the values based on since these were done on assumption for the EMF values that would

be there once the project is complete. Since we have seen the several sections of the report redundantly copied over from other reports, we would like a more detailed analysis of this report.

Regarding EMF concerns for human health, there are plenty of scientific studies that do indicate the grave concern on human health with EMF exposures and we cannot ignore this aspect. Here is a reference to an article and there are plenty of articles listed here under references:

https://psc.wi.gov/Documents/Brochures/EMF.pdf

There are not enough references listed in the draft report provided to us, and the explanation provided seems to be conveniently using studies that prove otherwise. This needs more investigation and references. The solution provided as raising the height of the poles and increasing the distance is non-existent. It was confirmed during the in person meeting that the design will not be altered and the height was already designed as required according to the SVP team present there. It seems that the preparers of this report did not even read the report after copying pasting from the old report as evident in the list of proposed solutions is not applicable here.

The live presentation on August 22nd showed the comparison of EMF values of household objects as a means to show that everyday household items carry a similar range of mG(milli Gauss) units. This comparison was inherently flawed since it mentioned that the household devices were producing those level at 1 feet while those indicated for 115KVf lines were at 60 feet. further these household devices do not operate 24X7 similar to the transmission lines.

There were a lot of citations of reports showcasing that no clear proof of EMF to human health exists but we would like to also point out certain states like Connecticut Department of Public Health have cited reports that have shown an increased incidence of childhood leukemia(Blood cancer) at avg exposure of only 3 mG. Also they have called out that some utility workers exposed to high levels of emf have increase risks of Lur Gehrig's disease.

They also call out that most impacts of EMF from high voltage lines dissipate at ~300 feet.

These are available on Page 2 & Page 3 of this report: https://portal.ct.gov/-/media/departments-and-agencies/dph/dph/environmental_health/eoha/pdf/emffactsheet2008pdf.pdf

This report has citations from WHO , National Institute of Environmental Health Sciences and California Department of Health Services.

https://www.niehs.nih.gov/sites/default/files/health/materials/electric_and_magnetic_fields_associated_with_the_use_of_electric_power_questions_and_answers_english_508.pdf

Some other questions around the EMF study map shared during presentation on Aug 22 2024:

1. Have you conducted an existing EMF study to identify the current value of the community ?

2. Are your emf study values based on the cumulative, or interference of existing emf and potential emf.

3. Emf value was calculated based on existing studies. What was the delta between mathematical modeling and actual values (from existing structures).

4. What is the delta between underground and overhead structures' emf values?

5. Can you provide the same for Route options B and C?

6. What happens when electrification of rail lines happens- as this is already planned for the future? Have you potentially considered the cumulative EMF effect in coexistence of the high power lines and with railway lines' electrification? Will the EMF values not be much higher then?

7. Can you share the mathematical modeling maps of Emf for 115k, 230k and the next two higher values of the power line ?

8. Can you share Emf maps from existing structures of 115k, 230 k and the next 2 higher values of the power line?

9. Please share any emf related information that you have especially if it contains assumptions for any calculations so we can understand the effects of current project and future projects.

10. Why does the electric pole structure proposed have wider diameter at the top? Can you share the design of the top of the pole ? Can it be extended by adding another section by bolting, welding or any other method? If so, what extra voltage can be added to the line?

11. what is the proposed power consumption of 95054 zip code for the next 5, 10 and 15 years in the master plan ?

Reference #3

Page 174- Section 5.21- Corona and induced current effect:

Personal observation#3

The railway line's proximity to the proposed high transmission lines is very concerning. The centerline distance from proposed lines to railway line is aproximately 50 feet per google maps with some margin for error. As per the report there are no Corona rings proposed for the 115KV lines. There seems to be negligence in design in consideration of the hazards posed by these high voltage lines as Corona effect can transfer current to railway lines. All the residents are at a high risk of accidental hazards given the proximity of the railway line, this project is adding on to the hazards. This section is only stating information about what Corona effect is, as may be required by law, which by the way is again a copy paste from an old report. The only concern discussed in more depth is the audible noise level. The concerns are presented to imply that this is not significant by stating that 115KV lines pose less than significant risk**.**

Reference #4: Post meeting material from March 19th 2024
@https://santaclara.legistar.com/LegislationDetail.aspx?ID=6582415&GUID=E6E14646-3CF7-4D15-BB98-F18580696012&Options=&Search=

Personal observation#4: At surface level, it looks like Option #A was selected only based on Cost perspective, without any consideration to human health, young children, property values, Corona effect, long term sustainability perspective or any other factors. While its important to understand the results of CEQA study, its extremely critical to understand the negative impact of EMF on the many young children living around the proposed transmission lines. Without extensive research and study on the impact to young children and adult heath, we should not be approving such an incomplete proposal.

Page 6 of this document stated that the preferred route A cost of construction is $9.5 million. In discussions with several real estate agents in the region, I have unanimously found all to agree that the real estate values of residences in close proximity to power lines goes down. Its hard to find potential buyers and most folks refrain from buying a house too close to high power transmission lines. There are 1000 plus residences in the area affected by this project. Even if we were to make very rough assumptions, and assume minimal cost reduction in property values and take an average loss of $100,000 per property in the current year, that goes to $100,000,000 of loss of equity to the public. This is not even accounting the businesses affected by this project. This long explanation was to raise a point that if the selection of route A was saving money to the city, this is costing a huge financial loss to the

public, which is not acceptable. This decrease in property values will also directly impact the tax collection by the Santa Clara Assessor and result in lower tax revenue coming into the city of Santa Clara.

Reference #5 : Page 49 of report- Figure 5.1-2. Wall separating residences and Lafayette Street.

Personal observation#5: *The picture is taken conveniently from the other side of the railway line which is actually Kingsbury street, inside a private community and not Lafayette street. This is further away from the proposed SVP lines. This is very misleading; see snapshots taken from Google maps below*

-

And this is what is included on the report:

The Mission Garden Townhome community has no walls as such and the main entry to residences face the road directly and are the most impacted. There are several other single family homes on Lafayette street with the same impact, having an entryway directly on the street. This and including other citations of reusing sections of older reports, is all in all absolutely unacceptable and instills distrust. This further shows incompetency of the agency/ agencies preparing this report.

Conclusion: *This project's initial study needs to expand beyond CEQA for approval from the public. The limited scope of CEQA has failed to address the following concerns we have:*

- *Health hazards due to EMF levels.- This is by far the gravest concern and CEQA is clearly not qualified to study that.*
- *Reduced property values- several references provided below.*
- *Loss of Aesthetic appeal for potential real estate buyers/ new and current businesses.*
- *Increase in audible noise levels during and post construction, which is already high in the area with presence of railway line and air traffic route.*
- *Increased fire hazard/ risk of other accidents.*
- *Induced current on railway lines with close proximity/ corona effect- CEQA report did not clearly address this for a 115KV line.*
- *Economic effect on the community from small to larger scale based on all of the above.*

*We demand further investigation and revisit other routes or proposals to resolve the power needs of the city. We have to ensure our and our kids' health is not at stake in the name of development and infrastructure and are not in agreement for this project to move forward**. We cannot approve this to move forward as of now given the lack of study and absence of a satisfactory solution/ mitigation provided in favor/ assurance to public health.***

Additional References:

Research on effects of EMF on humans:

1. ***https://www.ncbi.nlm.nih.gov/pmc/articles/PMC6025786/***

This research reinforces the concerns of EMF exposure effect on human health.

2. ***https://www.epa.gov/radtown/electric-and-magnetic-fields-power-lines***

This resource suggests taking precautions and keeping distance or limiting exposure. Residents would no longer have either of these two options per the current proposals if they are living there 24-7.

3. ***https://www.fastexpert.com/blog/should-i-buy-a-house-near-power-lines/***

These are points of view from a real estate expert who clearly states that property value declines proportionately to the distance of the property from high tension lines. People have apprehensions whether or not research clearly defines the risk. Potential buyers might have low priority for a property too close to a high tension power line.

4. ***https://orchard.com/blog/posts/power-lines-and-property-value***

Another research on real estate values lowered due to high tension power lines proximity.

What You Can Do

If you are concerned about possible health risks from electric and magnetic fields, you can:

- **Increase the distance between yourself and the source.** The greater the distance between you and the source of EMF, the lower your exposure.
- **Limit the time spent around the source.** The less time you spend near EMF, the lower your exposure.

Figure 5.1-2. Wall Separating Residences and Lafayette Street

Figure 5.1-2

Wall Separating Residences and Lafayette Street

Email: NRS-KRS 115 kV T-Line

From: Cipson Jose <cipsonj@gmail.com>
Sent: Thursday, August 29, 2024 10:31 PM
To: NRS-KRS Project; mayorandcouncil@santaclaraca.gov; info@siliconvalleypower.com; planningcommission@santaclaraca.gov; manager@santaclaraca.gov; AJackman@santaclaraca.gov
Subject: Concerns Regarding Upcoming High Power Electric Wire Poles

To Whomsoever it may concern,

We are residents of Santa Clara that will be negatively impacted by the "NRS-KRS 115kV Transmission Line Project". We have collectively reviewed the draft Initial Study/ Mitigated Negative declaration for "NRS-KRS 115kV Transmission Line Project" from July 2024. After reviewing this report and also attending the virtual and in person meetings, here are some references to emphasize our various concerns.

Reference #1 : CEQA's reporting includes these State reviewing agencies: California Air Resources Board (ARB), California Department of Fish and Wildlife, Bay Delta Region 3 (CDFW), California Department of Forestry and Fire Protection (CAL FIRE), California Department of Parks and Recreation, California Department of Toxic Substances Control (DTSC), California Department of Transportation, District 4 (DOT), California Department of Transportation, Division of Aeronautics (DOT), California Department of Transportation, Division of Transportation Planning (DOT), California Department of Water Resources (DWR), California Energy Commission, California Highway Patrol (CHP), California Native American Heritage Commission (NAHC), California Natural Resources Agency, California Public Utilities Commission (CPUC), California Regional Water Quality Control Board, San Francisco Bay Region 2 (RWQCB), Office of Historic Preservation, State Water Resources Control Board, Division of Drinking Water.

Personal observation#1 : *None of these agencies has any association with human health. CEQA reporting is not qualified enough to force the public to compromise on health concerns. Other agencies need to be involved to review this proposal, that are qualified to study the effect on " humans", not just wildlife and vegetation, or " environment. The checklist is completely devoid of our gravest humanitarian concerns. It is quite shocking that the project has not included any study to understand the potential impact of EMF waves on human lives, given that the transmission lines are potentially less than 60 feet from the closest dwellings. The city of Santa Clara needs to step in and have third party/ independent studies completed in favor of human health.*

Reference #2: Page 41 of report- Section 4.15. Electric and Magnetic Fields summary.

Personal observation#2 : *This consideration was completely absent earlier. Only after the residents raised their voices, this section was added. To our greatest disappointment, this section is copied over from an older report on the "South Loop Reconfiguration Project" from 2020. One would have expected that a new study would have been conducted for a project this size. The lack of due diligence and ignorance towards the specifics of this project are apparent and not acceptable. In fact we have found several sections of this older report as being reused across the entire report.*

The EMP map shared during the in person meeting had several flaws and we would like to question the viability of the study that was completed. What time of the day was the study completed and on what models were the values based on since these were done on assumption for the EMF values that would be there once the project is complete. Since we have seen the several sections of the report redundantly copied over from other reports, we would like a more detailed analysis of this report.

Regarding EMF concerns for human health, there are plenty of scientific studies that do indicate the grave concern on human health with EMF exposures and we cannot ignore this aspect. Here is a reference to an article and there are plenty of articles listed here under references:

https://psc.wi.gov/Documents/Brochures/EMF.pdf

There are not enough references listed in the draft report provided to us, and the explanation provided seems to be conveniently using studies that prove otherwise. This needs more investigation and references. The solution provided as raising the height of the poles and increasing the distance is non-existent. It was confirmed during the in person meeting that the design will not be altered and the height was already designed as required according to the SVP team present there. It seems that the preparers of this report did not even read the report after copying pasting from the old report as evident in the list of proposed solutions is not applicable here.

The live presentation on August 22nd showed the comparison of EMF values of household objects as a means to show that everyday household items carry a similar range of mG(milli Gauss) units. This comparison was inherently flawed since it mentioned that the household devices were producing those level at 1 feet while those indicated for 115KVf lines were at 60 feet. further these household devices do not operate 24X7 similar to the transmission lines.

There were a lot of citations of reports showcasing that no clear proof of EMF to human health exists but we would like to also point out certain states like Connecticut Department of Public Health have cited reports that have shown an increased incidence of childhood leukemia(Blood cancer) at avg exposure of only 3 mG. Also they have called out that some utility workers exposed to high levels of emf have increase risks of Lur Gehrig's disease.

They also call out that most impacts of EMF from high voltage lines dissipate at ~300 feet. These are available on Page 2 & Page 3 of this report: https://portal.ct.gov/-/media/departments-and-agencies/dph/dph/environmental_health/eoha/pdf/emffactsheet2008pdf.pdf

This report has citations from WHO , National Institute of Environmental Health Sciences and California Department of Health Services.

https://www.niehs.nih.gov/sites/default/files/health/materials/electric_and_magnetic_fields_associated_with_the_use_of_electric_power_questions_and_answers_english_508.pdf

Some other questions around the EMF study map shared during presentation on Aug 22 2024:

1. Have you conducted an existing EMF study to identify the current value of the community ?

2. Are your emf study values based on the cumulative, or interference of existing emf and potential emf.

3. Emf value was calculated based on existing studies. What was the delta between mathematical modeling and actual values (from existing structures).

4. What is the delta between underground and overhead structures' emf values?

5. Can you provide the same for Route options B and C?

6. What happens when electrification of rail lines happens- as this is already planned for the future? Have you potentially considered the cumulative EMF effect in coexistence of the high power lines and with railway lines' electrification? Will the EMF values not be much higher then?

7. Can you share the mathematical modeling maps of Emf for 115k, 230k and the next two higher values of the power line ?

8. Can you share Emf maps from existing structures of 115k, 230 k and the next 2 higher values of the power line?

9. Please share any emf related information that you have especially if it contains assumptions for any calculations so we can understand the effects of current project and future projects.

10. Why does the electric pole structure proposed have wider diameter at the top? Can you share the design of the top of the pole ? Can it be extended by adding another section by bolting, welding or any other method? If so, what extra voltage can be added to the line?

11. what is the proposed power consumption of 95054 zip code for the next 5, 10 and 15 years in the master plan ?

Reference #3

Page 174- Section 5.21- Corona and induced current effect:

Personal observation#3

The railway line's proximity to the proposed high transmission lines is very concerning. The centerline distance from proposed lines to railway line is aproximately 50 feet per google maps with some margin for error. As per the report there are no Corona rings proposed for the 115KV lines. There seems to be negligence in design in consideration of the hazards posed by these high voltage lines as Corona effect can transfer current to railway lines. All the residents are at a high risk of accidental hazards given the proximity of the railway line, this project is adding on to the hazards. This section is only stating information about what Corona effect is, as may be required by law, which by the way is again a copy paste from an old report. The only concern discussed in more depth is the audible noise level. The concerns are presented to imply that this is not significant by stating that 115KV lines pose less than significant risk**.**

Reference #4: Post meeting material from March 19th 2024
@https://santaclara.legistar.com/LegislationDetail.aspx?ID=6582415&GUID=E6E14646-3CF7-4D15-BB98-F18580696012&Options=&Search=

Personal observation#4: At surface level, it looks like Option #A was selected only based on Cost perspective, without any consideration to human health, young children, property values, Corona effect, long term sustainability perspective or any other factors. While its important to understand the results of CEQA study, its extremely critical to understand the negative impact of EMF on the many young children living around the proposed transmission lines. Without extensive research and study on the impact to young children and adult heath, we should not be approving such an incomplete proposal.

Page 6 of this document stated that the preferred route A cost of construction is $9.5 million. In discussions with several real estate agents in the region, I have unanimously found all to agree that the real estate values of residences in close proximity to power lines goes down. Its hard to find potential buyers and most folks refrain from buying a house too close to high power transmission lines. There are 1000 plus residences in the area affected by this project. Even if we were to make very rough assumptions, and assume minimal cost reduction in property values and take an average loss of $100,000 per property in the current year, that goes to $100,000,000 of loss of equity to the public. This is not even accounting the businesses affected by this project. This long explanation was to raise a point that if the selection of route A was saving money to the city, this is costing a huge financial loss to the public, which is not acceptable. This decrease in property values will also directly impact the tax collection by the Santa Clara Assessor and result in lower tax revenue coming into the city of Santa Clara.

Reference #5 : Page 49 of report- Figure 5.1-2. Wall separating residences and Lafayette Street.

Personal observation#5: *The picture is taken conveniently from the other side of the railway line which is actually Kingsbury street, inside a private community and not Lafayette street. This is further away from the proposed SVP lines. This is very misleading; see snapshots taken from Google maps below*

And this is what is included on the report:

Figure 5.1-2. Wall Separating Residences and Lafayette Street

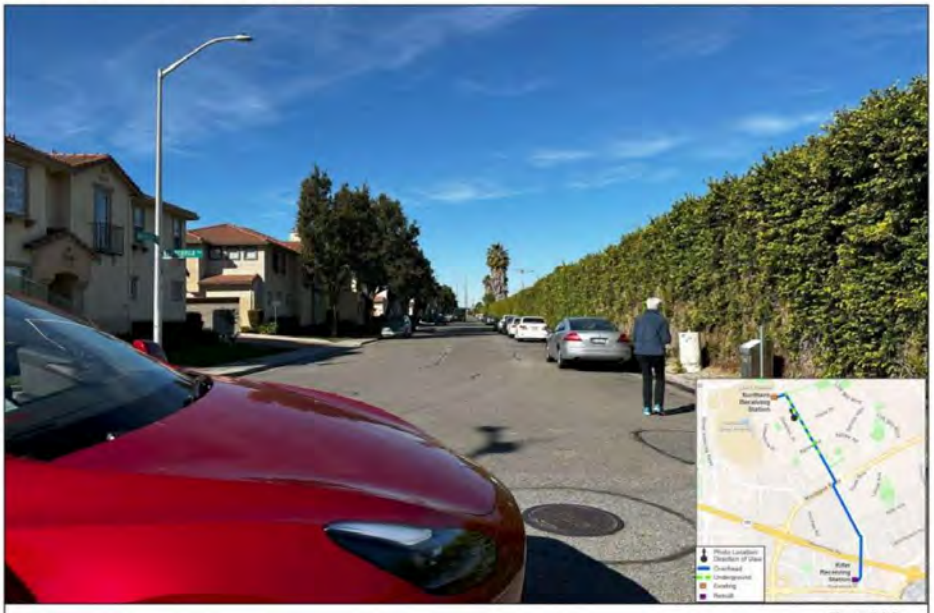

Figure 5.1-2
Wall Separating Residences and Lafayette Street

Conclusion: *This project's initial study needs to expand beyond CEQA for approval from the public. The limited scope of CEQA has failed to address the following concerns we have:*

- *Health hazards due to EMF levels.- This is by far the gravest concern and CEQA is clearly not qualified to study that.*
- *Reduced property values- several references provided below.*
- *Loss of Aesthetic appeal for potential real estate buyers/ new and current businesses.*
- *Increase in audible noise levels during and post construction, which is already high in the area with presence of railway line and air traffic route.*
- *Increased fire hazard/ risk of other accidents.*
- *Induced current on railway lines with close proximity/ corona effect- CEQA report did not clearly address this for a 115KV line.*
- *Economic effect on the community from small to larger scale based on all of the above.*

*We demand further investigation and revisit other routes or proposals to resolve the power needs of the city. We have to ensure our and our kids' health is not at stake in the name of development and infrastructure and are not in agreement for this project to move forward****. We cannot approve this to move forward as of now given the lack of study and absence of a satisfactory solution/ mitigation provided in favor/ assurance to public health.***

Thanks

Cipson

Email: NRS-KRS 115 kV T-Line

From: Om Shankar <thelostone.om@gmail.com>
Sent: Thursday, August 29, 2024 10:28 PM
To: NRS-KRS Project; mayorandcouncil@santaclaraca.gov; info@siliconvalleypower.com; planningcommission@santaclaraca.gov; manager@santaclaraca.gov; AJackman@santaclaraca.gov
Subject: Concerns and Objections Regarding the NRS-KRS 115kV Transmission Line Project

Dear Officials,

We, the residents of Santa Clara, strongly object to the proposed "NRS-KRS 115kV Transmission Line Project" due to the following critical concerns:

1. Health Hazards Due to EMF Exposure:

The draft report has ignored the potential health risks associated with electromagnetic fields (EMF) from high-voltage power lines, which will be placed dangerously close to residential areas. The study fails to involve any health-focused agencies and lacks independent, third-party reviews that consider the impact on human health.

Incompetent Approach:

- The EMF section was added only after residents raised concerns and is copied from an older, unrelated report, showcasing a lack of due diligence.
- The report downplays the risks by comparing EMF levels from household appliances, which is misleading and inappropriate.

2. Inadequate Study on Property Values:

The report fails to consider the negative impact on property values due to the proximity of these high-power lines. Real estate values in the area are expected to decline significantly, affecting over 1,000 residences and causing considerable financial loss to homeowners.

Incompetent Approach:

- The selection of Route A appears to be based solely on cost savings for the city, with no consideration for the economic impact on residents.
- The report uses **misleading images from other areas**, not from Lafayette St, and outdated information, leading to distrust and further concern among the community.

3. Corona Effect and Induced Current Risks:

The proximity of the proposed lines to existing railway tracks increases the risk of corona discharge and induced currents, posing a severe hazard to public safety.

Incompetent Approach:

- The report merely describes the corona effect without addressing its potential dangers, especially given the close proximity to railway lines.

- There is a clear negligence in the design considerations, as no corona rings are proposed for the 115kV lines, ignoring the risks to public safety.

Conclusion and Demands:

Given the serious shortcomings in the current report, we demand a more thorough investigation into alternative routes and a comprehensive study that prioritizes human health and safety. Until these concerns are adequately addressed, we cannot support the continuation of this project.

Additional References:

1. EMF and Health Concerns
2. Real Estate Impact

Sincerely,
Omshankar
Santa Clara Resident

Email: NRS-KRS 115 kV T-Line

From: Om Shankar <om.shankar@live.com>
Sent: Thursday, August 29, 2024 10:26 PM
To: NRS-KRS Project; mayorandcouncil@santaclaraca.gov; info@siliconvalleypower.com; planningcommission@santaclaraca.gov; manager@santaclaraca.gov; AJackman@santaclaraca.gov
Subject: Concerns Regarding SVP NRS-KRS 115kV Transmission Line Project

Dear Concerned Parties,

As residents of Santa Clara affected by the proposed **NRS-KRS 115kV Transmission Line Project**, we have reviewed the draft Initial Study/Mitigated Negative Declaration and attended related meetings. We have **significant concerns** about the project's potential impacts on our community:

1. **Health Concerns:**
   - The CEQA report lacks a comprehensive study on EMF effects on human health.
   - We request involvement of health-focused agencies and independent studies.
   - Existing studies suggest potential health risks, especially for children, at EMF levels similar to those projected for this project.
2. **EMF Study Inadequacies:**
   - The EMF section appears to be copied from an older, unrelated project.
   - We question the methodology and accuracy of the EMF measurements presented.
   - We request more detailed, project-specific EMF studies and transparent data.
3. **Property Value Impact:**
   - High-voltage transmission lines are likely to decrease property values in the area.
   - This could result in significant financial losses for homeowners and reduced tax revenue for the city.
4. **Safety Concerns:**
   - The proximity of the transmission lines to the railway raises concerns about induced currents and potential accidents.
   - The report does not adequately address these safety issues for a 115kV line.
5. **Environmental and Aesthetic Impact:**
   - Increased noise levels during and after construction.
   - Loss of aesthetic appeal for the neighborhood.
6. **Project Approval Process:**
   - We believe the current CEQA scope is insufficient to address all community concerns.
   - We request a more comprehensive review process that includes health, economic, and long-term sustainability factors.
7. **Inappropriate and Incompetent Approaches by Agencies:**
   - The draft report contains sections copied from unrelated, older reports, indicating a lack of proper analysis for this specific project.
   - **Misleading visual representations in the report, such as using images that do not accurately represent the affected areas**.
   - Inadequate consideration of alternative routes, with the selection of Route A appearing to be based primarily on cost, disregarding other crucial factors.
   - Failure to address the cumulative effects of the project, including potential future electrification of nearby rail lines.
   - Lack of transparency in EMF studies and calculations, raising doubts about the accuracy and completeness of the presented data.

In light of these concerns, we strongly urge you to:

1. Conduct more thorough, independent studies on EMF impacts on human health.
2. Re-evaluate alternative routes and underground options.
3. Provide more transparent and detailed information about the project's potential impacts.
4. Consider the long-term economic and health effects on the community.
5. Rectify the inadequacies in the current report and conduct a new, comprehensive analysis specific to this project.
6. Engage in more meaningful community consultation and address residents' concerns transparently.

We cannot support this project moving forward without satisfactory resolutions to these concerns. We request a detailed response addressing each point raised and a clear plan for rectifying the identified issues in the project planning and approval process.

Sincerely, Oṁ Shankar Tiwari on behalf of
Concerned Residents of Santa Clara

Email: NRS-KRS 115 kV T-Line

From: Amit Thakkar <athakkar2015@gmail.com>
Sent: Thursday, August 29, 2024 9:46 PM
To: NRS-KRS Project; mayorandcouncil@santaclaraca.gov; info@siliconvalleypower.com; planningcommission@santaclaraca.gov; manager@santaclaraca.gov; AJackman@santaclaraca.gov
Subject: Concerns Regarding Upcoming High Power Electric Wire Poles in Our Community for the upcoming SVP project connecting the Northern Receiving Station NRS to Kifer receiving station (KRS)- NRS-KRS 115kV Transmission Line Project

To: Whomsoever it may concern,
We are residents of Santa Clara that will be negatively impacted by the "NRS-KRS 115kV Transmission Line Project". We have collectively reviewed the draft Initial Study/ Mitigated Negative declaration for "NRS-KRS 115kV Transmission Line Project" from July 2024. After reviewing this report and also attending the virtual and in person meetings, here are some references to emphasize our various concerns.
Reference #1 : CEQA's reporting includes these State reviewing agencies: California Air Resources Board (ARB), California Department of Fish and Wildlife, Bay Delta Region 3 (CDFW), California Department of Forestry and Fire Protection (CAL FIRE), California Department of Parks and Recreation, California Department of Toxic Substances Control (DTSC), California Department of Transportation, District 4 (DOT), California Department of Transportation, Division of Aeronautics (DOT), California Department of Transportation, Division of Transportation Planning (DOT), California Department of Water Resources (DWR), California Energy Commission, California Highway Patrol (CHP), California Native American Heritage Commission (NAHC), California Natural Resources Agency, California Public Utilities Commission (CPUC), California Regional Water Quality Control Board, San Francisco Bay Region 2 (RWQCB), Office of Historic Preservation, State Water Resources Control Board, Division of Drinking Water.
Personal observation#1 : *None of these agencies has any association with human health. CEQA reporting is not qualified enough to force the public to compromise on health concerns. Other agencies need to be involved to review this proposal, that are qualified to study the effect on " humans", not just wildlife and vegetation, or " environment. The checklist is completely devoid of our gravest humanitarian concerns. It is quite shocking that the project has not included any study to understand the potential impact of EMF waves on human lives, given that the transmission lines are potentially less than 60 feet from the closest dwellings. The city of Santa Clara needs to step in and have third party/ independent studies completed in favor of human health.*
Reference #2: Page 41 of report- Section 4.15. Electric and Magnetic Fields summary.
Personal observation#2 : *This consideration was completely absent earlier. Only after the residents raised their voices, this section was added. To our greatest disappointment, this section is copied over from an older report on the "South Loop Reconfiguration Project" from 2020. One would have expected that a new study would have been conducted for a project this size. The lack of due diligence and ignorance towards the specifics of this project are apparent and not acceptable. In fact we have found several sections of this older report as being reused across the entire report.*
The EMP map shared during the in person meeting had several flaws and we would like to question the viability of the study that was completed. What time of the day was the study completed and on what models were the values based on since these were done on assumption for the EMF values that would be there once the project is complete. Since we have seen the several sections of the report redundantly copied over from other reports, we would like a more detailed analysis of this report.
Regarding EMF concerns for human health, there are plenty of scientific studies that do indicate the grave concern on human health with EMF exposures and we cannot ignore this aspect. Here is a reference to an article and there are plenty of articles listed here under references:
https://psc.wi.gov/Documents/Brochures/EMF.pdf

There are not enough references listed in the draft report provided to us, and the explanation provided seems to be conveniently using studies that prove otherwise. This needs more investigation and references. The solution provided as raising the height of the poles and increasing the distance is non-existent. It was confirmed during the in person meeting that the design will not be altered and the height was already designed as required according to the SVP team present there. It seems that the preparers of this report did not even read the report after copying pasting from the old report as evident in the list of proposed solutions is not applicable here.

The live presentation on August 22nd showed the comparison of EMF values of household objects as a means to show that everyday household items carry a similar range of mG(milli Gauss) units. This comparison was inherently flawed since it mentioned that the household devices were producing those level at 1 feet while those indicated for 115KVf lines were at 60 feet. further these household devices do not operate 24X7 similar to the transmission lines.

There were a lot of citations of reports showcasing that no clear proof of EMF to human health exists but we would like to also point out certain states like Connecticut Department of Public Health have cited reports that have shown an increased incidence of childhood leukemia(Blood cancer) at avg exposure of only 3 mG. Also they have called out that some utility workers exposed to high levels of emf have increase risks of Lur Gehrig's disease.

They also call out that most impacts of EMF from high voltage lines dissipate at ~300 feet.

These are available on Page 2 & Page 3 of this report: https://portal.ct.gov/-/media/departments-and-agencies/dph/dph/environmental_health/eoha/pdf/emffactsheet2008pdf.pdf

This report has citations from WHO , National Institute of Environmental Health Sciences and California Department of Health Services.

https://www.niehs.nih.gov/sites/default/files/health/materials/electric_and_magnetic_fields_associated_with_the_use_of_electric_power_questions_and_answers_english_508.pdf

Some other questions around the EMF study map shared during presentation on Aug 22 2024:

1. Have you conducted an existing EMF study to identify the current value of the community ?
2. Are your emf study values based on the cumulative, or interference of existing emf and potential emf.
3. Emf value was calculated based on existing studies. What was the delta between mathematical modeling and actual values (from existing structures).
4. What is the delta between underground and overhead structures' emf values?
5. Can you provide the same for Route options B and C?
6. What happens when electrification of rail lines happens- as this is already planned for the future? Have you potentially considered the cumulative EMF effect in coexistence of the high power lines and with railway lines' electrification? Will the EMF values not be much higher then?
7. Can you share the mathematical modeling maps of Emf for 115k, 230k and the next two higher values of the power line ?
8. Can you share Emf maps from existing structures of 115k, 230 k and the next 2 higher values of the power line?
9. Please share any emf related information that you have especially if it contains assumptions for any calculations so we can understand the effects of current project and future projects.
10. Why does the electric pole structure proposed have wider diameter at the top? Can you share the design of the top of the pole ? Can it be extended by adding another section by bolting, welding or any other method? If so, what extra voltage can be added to the line?
11. what is the proposed power consumption of 95054 zip code for the next 5, 10 and 15 years in the master plan ?

Reference #3

Page 174- Section 5.21- Corona and induced current effect:

Personal observation#3

The railway line's proximity to the proposed high transmission lines is very concerning. The centerline distance from proposed lines to railway line is aproximately 50 feet per google maps with some margin for error. As per the report there are no Corona rings proposed for the 115KV lines. There seems to be negligence in design in consideration of the hazards posed by these high voltage lines as Corona effect

can transfer current to railway lines. All the residents are at a high risk of accidental hazards given the proximity of the railway line, this project is adding on to the hazards. This section is only stating information about what Corona effect is, as may be required by law, which by the way is again a copy paste from an old report. The only concern discussed in more depth is the audible noise level. The concerns are presented to imply that this is not significant by stating that 115KV lines pose less than significant risk**.**

Reference #4: Post meeting material from March 19th 2024 @https://santaclara.legistar.com/LegislationDetail.aspx?ID=6582415&GUID=E6E14646-3CF7-4D15-BB98-F18580696012&Options=&Search=

Personal observation#4: At surface level, it looks like Option #A was selected only based on Cost perspective, without any consideration to human health, young children, property values, Corona effect, long term sustainability perspective or any other factors. While its important to understand the results of CEQA study, its extremely critical to understand the negative impact of EMF on the many young children living around the proposed transmission lines. Without extensive research and study on the impact to young children and adult heath, we should not be approving such an incomplete proposal.

Page 6 of this document stated that the preferred route A cost of construction is $9.5 million. In discussions with several real estate agents in the region, I have unanimously found all to agree that the real estate values of residences in close proximity to power lines goes down. Its hard to find potential buyers and most folks refrain from buying a house too close to high power transmission lines. There are 1000 plus residences in the area affected by this project. Even if we were to make very rough assumptions, and assume minimal cost reduction in property values and take an average loss of $100,000 per property in the current year, that goes to $100,000,000 of loss of equity to the public. This is not even accounting the businesses affected by this project. This long explanation was to raise a point that if the selection of route A was saving money to the city, this is costing a huge financial loss to the public, which is not acceptable. This decrease in property values will also directly impact the tax collection by the Santa Clara Assessor and result in lower tax revenue coming into the city of Santa Clara.

Reference #5 : Page 49 of report- Figure 5.1-2. Wall separating residences and Lafayette Street.

Personal observation#5: *The picture is taken conveniently from the other side of the railway line which is actually Kingsbury street, inside a private community and not Lafayette street. This is further away from the proposed SVP lines. This is very misleading; see snapshots taken from Google maps below*

And this is what is included on the report:

NRS-KRS 115kV Transmission Line Project 5.1. Aesthetics

Figure 5.1-2. Wall Separating Residences and Lafayette Street

Figure 5.1-2

Wall Separating Residences and Lafayette Street

July 2024 5.1-5 Administrative Draft MND/IS

The Mission Garden Townhome community has no walls as such and the main entry to residences face the road directly and are the most impacted. There are several other single family homes on Lafayette street with the same impact, having an entryway directly on the street. This and including other citations

of reusing sections of older reports, is all in all absolutely unacceptable and instills distrust. This further shows incompetency of the agency/ agencies preparing this report.

Conclusion: *This project's initial study needs to expand beyond CEQA for approval from the public. The limited scope of CEQA has failed to address the following concerns we have:*

- *Health hazards due to EMF levels.- This is by far the gravest concern and CEQA is clearly not qualified to study that.*
- *Reduced property values- several references provided below.*
- *Loss of Aesthetic appeal for potential real estate buyers/ new and current businesses.*
- *Increase in audible noise levels during and post construction, which is already high in the area with presence of railway line and air traffic route.*
- *Increased fire hazard/ risk of other accidents.*
- *Induced current on railway lines with close proximity/ corona effect- CEQA report did not clearly address this for a 115KV line.*
- *Economic effect on the community from small to larger scale based on all of the above.*

*We demand further investigation and revisit other routes or proposals to resolve the power needs of the city. We have to ensure our and our kids' health is not at stake in the name of development and infrastructure and are not in agreement for this project to move forward**. We cannot approve this to move forward as of now given the lack of study and absence of a satisfactory solution/ mitigation provided in favor/ assurance to public health.***

Additional References:

Research on effects of EMF on humans:

1. ***https://www.ncbi.nlm.nih.gov/pmc/articles/PMC6025786/***

This research reinforces the concerns of EMF exposure effect on human health.

2. ***https://www.epa.gov/radtown/electric-and-magnetic-fields-power-lines***

This resource suggests taking precautions and keeping distance or limiting exposure. Residents would no longer have either of these two options per the current proposals if they are living there 24-7.

Thank you

Amit Thakkar
1857 Silva Place
Santa Clara, CA 95054

Email: NRS-KRS 115 kV T-Line

From: Lenny Le <lenny.le@gmail.com>
Sent: Thursday, August 29, 2024 9:28 PM
To: NRS-KRS Project; mayorandcouncil@santaclaraca.gov; info@siliconvalleypower.com; planningcommission@santaclaraca.gov; manager@santaclaraca.gov; Allie Jackman
Subject: Concerns Regarding Upcoming High Power Electric Wire Poles in Our Community for the upcoming SVP project connecting the Northern Receiving Station NRS to Kifer receiving station (KRS)- NRS-KRS 115kV Transmission Line Project

To Whomsoever it may concern,

We are residents of Santa Clara that will be negatively impacted by the "NRS-KRS 115kV Transmission Line Project". We have collectively reviewed the draft Initial Study/ Mitigated Negative declaration for "NRS-KRS 115kV Transmission Line Project" from July 2024. After reviewing this report and also attending the virtual and in person meetings, here are some references to emphasize our various concerns.

Reference #1 : CEQA's reporting includes these State reviewing agencies: California Air Resources Board (ARB), California Department of Fish and Wildlife, Bay Delta Region 3 (CDFW), California Department of Forestry and Fire Protection (CAL FIRE), California Department of Parks and Recreation, California Department of Toxic Substances Control (DTSC), California Department of Transportation, District 4 (DOT), California Department of Transportation, Division of Aeronautics (DOT), California Department of Transportation, Division of Transportation Planning (DOT), California Department of Water Resources (DWR), California Energy Commission, California Highway Patrol (CHP), California Native American Heritage Commission (NAHC), California Natural Resources Agency, California Public Utilities Commission (CPUC), California Regional Water Quality Control Board, San Francisco Bay Region 2 (RWQCB), Office of Historic Preservation, State Water Resources Control Board, Division of Drinking Water.

Personal observation#1 : *None of these agencies has any association with human health. CEQA reporting is not qualified enough to force the public to compromise on health concerns. Other agencies need to be involved to review this proposal, that are qualified to study the effect on " humans", not just wildlife and vegetation, or " environment. The checklist is completely devoid of our gravest humanitarian concerns. It is quite shocking that the project has not included any study to understand the potential impact of EMF waves on human lives, given that the transmission lines are potentially less than 60 feet from the closest dwellings. The city of Santa Clara needs to step in and have third party/ independent studies completed in favor of human health.*

Reference #2: Page 41 of report- Section 4.15. Electric and Magnetic Fields summary.

Personal observation#2 : *This consideration was completely absent earlier. Only after the residents raised their voices, this section was added. To our greatest disappointment, this section is copied over from an older report on the "South Loop Reconfiguration Project" from 2020. One would have expected that a new study would have been conducted for a project this size. The lack of due diligence and ignorance towards the specifics of this project are apparent and not acceptable. In fact we have found several sections of this older report as being reused across the entire report.*

The EMP map shared during the in person meeting had several flaws and we would like to question the viability of the study that was completed. What time of the day was the study completed and on what models were the values based on since these were done on assumption for the EMF values that would be there once the project is complete. Since we have seen the several sections of the report redundantly copied over from other reports, we would like a more detailed analysis of this report.

Regarding EMF concerns for human health, there are plenty of scientific studies that do indicate the grave concern on human health with EMF exposures and we cannot ignore this aspect. Here is a reference to an article and there are plenty of articles listed here under references:

https://psc.wi.gov/Documents/Brochures/EMF.pdf

There are not enough references listed in the draft report provided to us, and the explanation provided seems to be conveniently using studies that prove otherwise. This needs more investigation and references. The solution provided as raising the height of the poles and increasing the distance is non-existent. It was confirmed during the in person meeting that the design will not be altered and the height was already designed as required according to the SVP team present there. It seems that the preparers of this report did not even read the report after copying pasting from the old report as evident in the list of proposed solutions is not applicable here.

The live presentation on August 22nd showed the comparison of EMF values of household objects as a means to show that everyday household items carry a similar range of mG(milli Gauss) units. This comparison was inherently flawed since it mentioned that the household devices were producing those level at 1 feet while those indicated for 115KVf lines were at 60 feet. further these household devices do not operate 24X7 similar to the transmission lines.

There were a lot of citations of reports showcasing that no clear proof of EMF to human health exists but we would like to also point out certain states like Connecticut Department of Public Health have cited reports that have shown an increased incidence of childhood leukemia(Blood cancer) at avg exposure of only 3 mG. Also they have called out that some utility workers exposed to high levels of emf have increase risks of Lur Gehrig's disease.

They also call out that most impacts of EMF from high voltage lines dissipate at ~300 feet. These are available on Page 2 & Page 3 of this report: https://portal.ct.gov/-/media/departments-and-agencies/dph/dph/environmental_health/eoha/pdf/emffactsheet2008pdf.pdf

This report has citations from WHO , National Institute of Environmental Health Sciences and California Department of Health Services.

https://www.niehs.nih.gov/sites/default/files/health/materials/electric_and_magnetic_fields_associated_with_the_use_of_electric_power_questions_and_answers_english_508.pdf

Some other questions around the EMF study map shared during presentation on Aug 22 2024:

1. Have you conducted an existing EMF study to identify the current value of the community ?

2. Are your emf study values based on the cumulative, or interference of existing emf and potential emf.

3. Emf value was calculated based on existing studies. What was the delta between mathematical modeling and actual values (from existing structures).

4. What is the delta between underground and overhead structures' emf values?

5. Can you provide the same for Route options B and C?

6. What happens when electrification of rail lines happens- as this is already planned for the future? Have you potentially considered the cumulative EMF effect in coexistence of the high power lines and with railway lines' electrification? Will the EMF values not be much higher then?

7. Can you share the mathematical modeling maps of Emf for 115k, 230k and the next two higher values of the power line ?

8. Can you share Emf maps from existing structures of 115k, 230 k and the next 2 higher values of the power line?

9. Please share any emf related information that you have especially if it contains assumptions for any calculations so we can understand the effects of current project and future projects.

10. Why does the electric pole structure proposed have wider diameter at the top? Can you share the design of the top of the pole ? Can it be extended by adding another section by bolting, welding or any other method? If so, what extra voltage can be added to the line?

11. what is the proposed power consumption of 95054 zip code for the next 5, 10 and 15 years in the master plan ?

Reference #3

Page 174- Section 5.21- Corona and induced current effect:

Personal observation#3

The railway line's proximity to the proposed high transmission lines is very concerning. The centerline distance from proposed lines to railway line is aproximately 50 feet per google maps with some margin for error. As per the report there are no Corona rings proposed for the 115KV lines. There seems to be negligence in design in consideration of the hazards posed by these high voltage lines as Corona effect can transfer current to railway lines. All the residents are at a high risk of accidental hazards given the proximity of the railway line, this project is adding on to the hazards. This section is only stating information about what Corona effect is, as may be required by law, which by the way is again a copy paste from an old report. The only concern discussed in more depth is the audible noise level. The concerns are presented to imply that this is not significant by stating that 115KV lines pose less than significant risk**.**

Reference #4: Post meeting material from March 19th 2024
@https://santaclara.legistar.com/LegislationDetail.aspx?ID=6582415&GUID=E6E14646-3CF7-4D15-BB98-F18580696012&Options=&Search=

Personal observation#4: At surface level, it looks like Option #A was selected only based on Cost perspective, without any consideration to human health, young children, property values, Corona effect, long term sustainability perspective or any other factors. While its important to understand the results of CEQA study, its extremely critical to understand the negative impact of EMF on the many young children living around the proposed transmission lines. Without extensive research and study on the impact to young children and adult heath, we should not be approving such an incomplete proposal.

Page 6 of this document stated that the preferred route A cost of construction is $9.5 million. In discussions with several real estate agents in the region, I have unanimously found all to agree that the real estate values of residences in close proximity to power lines goes down. Its hard to find potential buyers and most folks refrain from buying a house too close to high power transmission lines. There are 1000 plus residences in the area affected by this project. Even if we were to make very rough assumptions, and assume minimal cost reduction in property values and take an average loss of $100,000 per property in the current year, that goes to $100,000,000 of loss of equity to the public. This is not even accounting the businesses affected by this project. This long explanation was to raise a point that if the selection of route A was saving money to the city, this is costing a huge financial loss to the public, which is not acceptable. This decrease in property values will also directly impact the tax collection by the Santa Clara Assessor and result in lower tax revenue coming into the city of Santa Clara.

Reference #5 : Page 49 of report- Figure 5.1-2. Wall separating residences and Lafayette Street.

Personal observation#5: *The picture is taken conveniently from the other side of the railway line which is actually Kingsbury street, inside a private community and not Lafayette street. This is further away from the proposed SVP lines. This is very misleading; see snapshots taken from Google maps below*

-

And this is what is included on the report:

The Mission Garden Townhome community has no walls as such and the main entry to residences face the road directly and are the most impacted. There are several other single family homes on Lafayette street with the same impact, having an entryway directly on the street. This and including other citations of reusing sections of older reports, is all in all absolutely unacceptable and instills distrust. This further shows incompetency of the agency/ agencies preparing this report.

Conclusion: *This project's initial study needs to expand beyond CEQA for approval from the public. The limited scope of CEQA has failed to address the following concerns we have:*

- *Health hazards due to EMF levels.- This is by far the gravest concern and CEQA is clearly not qualified to study that.*
- *Reduced property values- several references provided below.*
- *Loss of Aesthetic appeal for potential real estate buyers/ new and current businesses.*
- *Increase in audible noise levels during and post construction, which is already high in the area with presence of railway line and air traffic route.*
- *Increased fire hazard/ risk of other accidents.*
- *Induced current on railway lines with close proximity/ corona effect- CEQA report did not clearly address this for a 115KV line.*
- *Economic effect on the community from small to larger scale based on all of the above.*

*We demand further investigation and revisit other routes or proposals to resolve the power needs of the city. We have to ensure our and our kids' health is not at stake in the name of development and infrastructure and are not in agreement for this project to move forward**. We cannot approve this to move forward as of now given the lack of study and absence of a satisfactory solution/ mitigation provided in favor/ assurance to public health.***

Additional References:

Research on effects of EMF on humans:

1. ***https://www.ncbi.nlm.nih.gov/pmc/articles/PMC6025786/***

This research reinforces the concerns of EMF exposure effect on human health.

2. ***https://www.epa.gov/radtown/electric-and-magnetic-fields-power-lines***

This resource suggests taking precautions and keeping distance or limiting exposure. Residents would no longer have either of these two options per the current proposals if they are living there 24-7.

3. ***https://www.fastexpert.com/blog/should-i-buy-a-house-near-power-lines/***

These are points of view from a real estate expert who clearly states that property value declines proportionately to the distance of the property from high tension lines. People have apprehensions whether or not research clearly defines the risk. Potential buyers might have low priority for a property too close to a high tension power line.

4. ***https://orchard.com/blog/posts/power-lines-and-property-value***

Another research on real estate values lowered due to high tension power lines proximity.

NRS-KRS 115kV Transmission Line Project 5.1. Aesthetics

Figure 5.1-2. Wall Separating Residences and Lafayette Street

Figure 5.1-2

Wall Separating Residences and Lafayette Street

July 2024 5.1-5 Administrative Draft MND/IS

What You Can Do

If you are concerned about possible health risks from electric and magnetic fields, you can:

- **Increase the distance between yourself and the source.** The greater the distance between you and the source of EMF, the lower your exposure.
- **Limit the time spent around the source.** The less time you spend near EMF, the lower your exposure.

Email: NRS-KRS 115 kV T-Line

From: srinivas dangeti <dsrinu06@gmail.com>
Sent: Thursday, August 29, 2024 8:53 PM
To: NRS-KRS Project; mayorandcouncil@santaclaraca.gov; info@siliconvalleypower.com; planningcommission@santaclaraca.gov; manager@santaclaraca.gov; AJackman@santaclaraca.gov
Subject: Concerns Regarding Upcoming High Power Electric Wire Poles in Our Community for the upcoming SVP project connecting the Northern Receiving Station NRS to Kifer receiving station (KRS)- NRS-KRS 115kV Transmission Line Project

To Whomsoever it may concern,
We are residents of Santa Clara that will be negatively impacted by the "NRS-KRS 115kV Transmission Line Project". We have collectively reviewed the draft Initial Study/ Mitigated Negative declaration for "NRS-KRS 115kV Transmission Line Project" from July 2024. After reviewing this report and also attending the virtual and in person meetings, here are some references to emphasize our various concerns.

Reference #1 : CEQA's reporting includes these State reviewing agencies: California Air Resources Board (ARB), California Department of Fish and Wildlife, Bay Delta Region 3 (CDFW), California Department of Forestry and Fire Protection (CAL FIRE), California Department of Parks and Recreation, California Department of Toxic Substances Control (DTSC), California Department of Transportation, District 4 (DOT), California Department of Transportation, Division of Aeronautics (DOT), California Department of Transportation, Division of Transportation Planning (DOT), California Department of Water Resources (DWR), California Energy Commission, California Highway Patrol (CHP), California Native American Heritage Commission (NAHC), California Natural Resources Agency, California Public Utilities Commission (CPUC), California Regional Water Quality Control Board, San Francisco Bay Region 2 (RWQCB), Office of Historic Preservation, State Water Resources Control Board, Division of Drinking Water.

Personal observation#1 : *None of these agencies has any association with human health. CEQA reporting is not qualified enough to force the public to compromise on health concerns. Other agencies need to be involved to review this proposal, that are qualified to study the effect on " humans", not just wildlife and vegetation, or " environment. The checklist is completely devoid of our gravest humanitarian concerns. It is quite shocking that the project has not included any study to understand the potential impact of EMF waves on human lives, given that the transmission lines are potentially less than 60 feet from the closest dwellings. The city of Santa Clara needs to step in and have third party/ independent studies completed in favor of human health.*

Reference #2: Page 41 of report- Section 4.15. Electric and Magnetic Fields summary.

Personal observation#2 : *This consideration was completely absent earlier. Only after the residents raised their voices, this section was added. To our greatest disappointment, this section is copied over from an older report on the "South Loop Reconfiguration Project" from 2020. One would have expected that a new study would have been conducted for a project this size. The lack of due diligence and ignorance towards the specifics of this project are apparent and not acceptable. In fact we have found several sections of this older report as being reused across the entire report.*

The EMP map shared during the in person meeting had several flaws and we would like to question the viability of the study that was completed. What time of the day was the study completed and on what models were the values based on since these were done on assumption for the EMF values that would be there once the project is complete. Since we have seen the several sections of the report redundantly copied over from other reports, we would like a more detailed analysis of this report.

Regarding EMF concerns for human health, there are plenty of scientific studies that do indicate the grave concern on human health with EMF exposures and we cannot ignore this aspect. Here is a reference to an article and there are plenty of articles listed here under references:

https://psc.wi.gov/Documents/Brochures/EMF.pdf

There are not enough references listed in the draft report provided to us, and the explanation provided seems to be conveniently using studies that prove otherwise. This needs more investigation and references. The solution provided as raising the height of the poles and increasing the distance is non-existent. It was confirmed during the in person meeting that the design will not be altered and the height was already designed as required according to the SVP team present there. It seems that the preparers of this report did not even read the report after copying pasting from the old report as evident in the list of proposed solutions is not applicable here.

The live presentation on August 22nd showed the comparison of EMF values of household objects as a means to show that everyday household items carry a similar range of mG(milli Gauss) units. This comparison was inherently flawed since it mentioned that the household devices were producing those level at 1 feet while those indicated for 115KVf lines were at 60 feet. further these household devices do not operate 24X7 similar to the transmission lines.

There were a lot of citations of reports showcasing that no clear proof of EMF to human health exists but we would like to also point out certain states like Connecticut Department of Public Health have cited reports that have shown an increased incidence of childhood leukemia(Blood cancer) at avg exposure of only 3 mG. Also they have called out that some utility workers exposed to high levels of emf have increase risks of Lur Gehrig's disease.

They also call out that most impacts of EMF from high voltage lines dissipate at ~300 feet.

These are available on Page 2 & Page 3 of this report: https://portal.ct.gov/-/media/departments-and-agencies/dph/dph/environmental_health/eoha/pdf/emffactsheet2008pdf.pdf

This report has citations from WHO , National Institute of Environmental Health Sciences and California Department of Health Services.

https://www.niehs.nih.gov/sites/default/files/health/materials/electric_and_magnetic_fields_associated_with_the_use_of_electric_power_questions_and_answers_english_508.pdf

Some other questions around the EMF study map shared during presentation on Aug 22 2024:

1. Have you conducted an existing EMF study to identify the current value of the community ?

2. Are your emf study values based on the cumulative, or interference of existing emf and potential emf.

3. Emf value was calculated based on existing studies. What was the delta between mathematical modeling and actual values (from existing structures).

4. What is the delta between underground and overhead structures' emf values?

5. Can you provide the same for Route options B and C?

6. What happens when electrification of rail lines happens- as this is already planned for the future? Have you potentially considered the cumulative EMF effect in coexistence of the high power lines and with railway lines' electrification? Will the EMF values not be much higher then?

7. Can you share the mathematical modeling maps of Emf for 115k, 230k and the next two higher values of the power line ?

8. Can you share Emf maps from existing structures of 115k, 230 k and the next 2 higher values of the power line?

9. Please share any emf related information that you have especially if it contains assumptions for any calculations so we can understand the effects of current project and future projects.

10. Why does the electric pole structure proposed have wider diameter at the top? Can you share the design of the top of the pole ? Can it be extended by adding another section by bolting, welding or any other method? If so, what extra voltage can be added to the line?

11. what is the proposed power consumption of 95054 zip code for the next 5, 10 and 15 years in the master plan ?

Reference #3

Page 174- Section 5.21- Corona and induced current effect:

Personal observation#3

The railway line's proximity to the proposed high transmission lines is very concerning. The centerline distance from proposed lines to railway line is aproximately 50 feet per google maps with some margin for error. As per the report there are no Corona rings proposed for the 115KV lines. There seems to be negligence in design in consideration of the hazards posed by these high voltage lines as Corona effect can transfer current to railway lines. All the residents are at a high risk of accidental hazards given the proximity of the railway line, this project is adding on to the hazards. This section is only stating information about what Corona effect is, as may be required by law, which by the way is again a copy paste from an old report. The only concern discussed in more depth is the audible noise level. The concerns are presented to imply that this is not significant by stating that 115KV lines pose less than significant risk**.**

Reference #4: Post meeting material from March 19th 2024
@https://santaclara.legistar.com/LegislationDetail.aspx?ID=6582415&GUID=E6E14646-3CF7-4D15-BB98-F18580696012&Options=&Search=

Personal observation#4: At surface level, it looks like Option #A was selected only based on Cost perspective, without any consideration to human health, young children, property values, Corona effect, long term sustainability perspective or any other factors. While its important to understand the results of CEQA study, its extremely critical to understand the negative impact of EMF on the many young children living around the proposed transmission lines. Without extensive research and study on the impact to young children and adult heath, we should not be approving such an incomplete proposal.

Page 6 of this document stated that the preferred route A cost of construction is $9.5 million. In discussions with several real estate agents in the region, I have unanimously found all to agree that the real estate values of residences in close proximity to power lines goes down. Its hard to find potential buyers and most folks refrain from buying a house too close to high power transmission lines. There are 1000 plus residences in the area affected by this project. Even if we were to make very rough assumptions, and assume minimal cost reduction in property values and take an average loss of $100,000 per property in the current year, that goes to $100,000,000 of loss of equity to the public. This is not even accounting the businesses affected by this project. This long explanation was to raise a point that if the selection of route A was saving money to the city, this is costing a huge financial loss to the

public, which is not acceptable. This decrease in property values will also directly impact the tax collection by the Santa Clara Assessor and result in lower tax revenue coming into the city of Santa Clara.

Reference #5 : Page 49 of report- Figure 5.1-2. Wall separating residences and Lafayette Street.

Personal observation#5: *The picture is taken conveniently from the other side of the railway line which is actually Kingsbury street, inside a private community and not Lafayette street. This is further away from the proposed SVP lines. This is very misleading; see snapshots taken from Google maps below*

And this is what is included on the report:

Figure 5.1-2. Wall Separating Residences and Lafayette Street

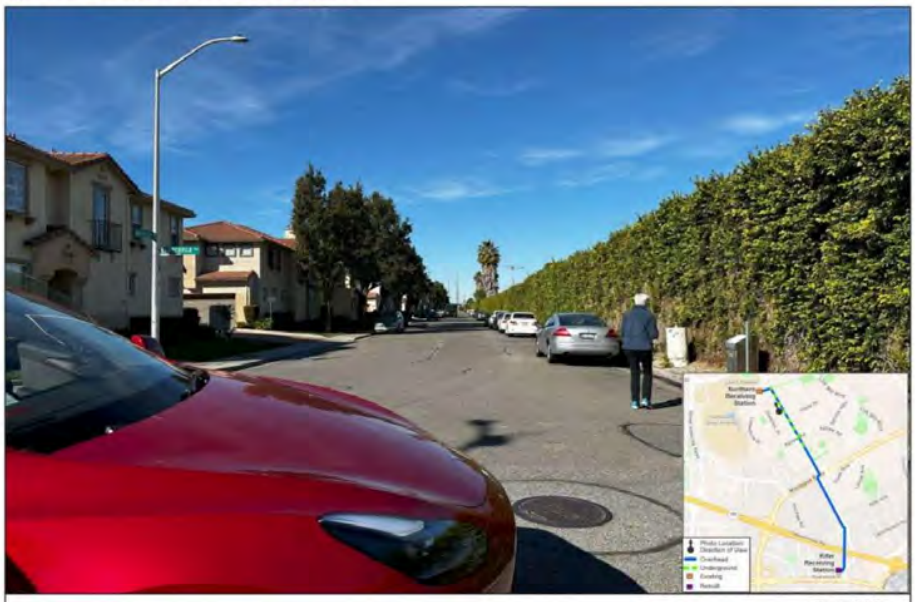

Figure 5.1-2
Wall Separating Residences and Lafayette Street

The Mission Garden Townhome community has no walls as such and the main entry to residences face the road directly and are the most impacted. There are several other single family homes on Lafayette street with the same impact, having an entryway directly on the street. This and including other citations of reusing sections of older reports, is all in all absolutely unacceptable and instills distrust. This further shows incompetency of the agency/ agencies preparing this report.

Conclusion: *This project's initial study needs to expand beyond CEQA for approval from the public. The limited scope of CEQA has failed to address the following concerns we have:*

- *Health hazards due to EMF levels.- This is by far the gravest concern and CEQA is clearly not qualified to study that.*
- *Reduced property values- several references provided below.*
- *Loss of Aesthetic appeal for potential real estate buyers/ new and current businesses.*
- *Increase in audible noise levels during and post construction, which is already high in the area with presence of railway line and air traffic route.*
- *Increased fire hazard/ risk of other accidents.*
- *Induced current on railway lines with close proximity/ corona effect- CEQA report did not clearly address this for a 115KV line.*
- *Economic effect on the community from small to larger scale based on all of the above.*

*We demand further investigation and revisit other routes or proposals to resolve the power needs of the city. We have to ensure our and our kids' health is not at stake in the name of development and infrastructure and are not in agreement for this project to move forward****. We cannot approve this to move forward as of now given the lack of study and absence of a satisfactory solution/ mitigation provided in favor/ assurance to public health.***

Additional References:

Research on effects of EMF on humans:

1. ***https://www.ncbi.nlm.nih.gov/pmc/articles/PMC6025786/***

This research reinforces the concerns of EMF exposure effect on human health.

2. ***https://www.epa.gov/radtown/electric-and-magnetic-fields-power-lines***

This resource suggests taking precautions and keeping distance or limiting exposure. Residents would no longer have either of these two options per the current proposals if they are living there 24-7.

What You Can Do

If you are concerned about possible health risks from electric and magnetic fields, you can:

- **Increase the distance between yourself and the source.** The greater the distance between you and the source of EMF, the lower your exposure.
- **Limit the time spent around the source.** The less time you spend near EMF, the lower your exposure.

3. ***https://www.fastexpert.com/blog/should-i-buy-a-house-near-power-lines/***

These are points of view from a real estate expert who clearly states that property value declines proportionately to the distance of the property from high tension lines. People have apprehensions whether or not research clearly defines the risk. Potential buyers might have low priority for a property too close to a high tension power line.

4. ***https://orchard.com/blog/posts/power-lines-and-property-value***

Another research on real estate values lowered due to high tension power lines proximity.

Thanks,
DS

Email: NRS-KRS 115 kV T-Line

From: venkat patchigolla <venkipatchigolla@gmail.com>
Sent: Thursday, August 29, 2024 8:04 PM
To: NRS-KRS Project; mayorandcouncil@santaclaraca.gov; info@siliconvalleypower.com; planningcommission@santaclaraca.gov; manager@santaclaraca.gov; AJackman@santaclaraca.gov
Subject: Subject: Concerns Regarding Upcoming High Power Electric Wire Poles in Our Community for the upcoming SVP project NRS-KRS 115kV Transmission Line Project

Hi All,

Subject: **Concerns Regarding Upcoming High Power Electric Wire Poles in Our Community for the upcoming SVP project connecting the Northern Receiving Station NRS to Kifer receiving station (KRS)- *NRS-KRS 115kV Transmission Line Project***

To Whomsoever it may concern,

We are residents of Santa Clara that will be negatively impacted by the "NRS-KRS 115kV Transmission Line Project". We have collectively reviewed the draft Initial Study/ Mitigated Negative declaration for "NRS-KRS 115kV Transmission Line Project" from July 2024. After reviewing this report and also attending the virtual and in person meetings, here are some references to emphasize our various concerns.

Reference #1 : CEQA's reporting includes these State reviewing agencies: California Air Resources Board (ARB), California Department of Fish and Wildlife, Bay Delta Region 3 (CDFW), California Department of Forestry and Fire Protection (CAL FIRE), California Department of Parks and Recreation, California Department of Toxic Substances Control (DTSC), California Department of Transportation, District 4 (DOT), California Department of Transportation, Division of Aeronautics (DOT), California Department of Transportation, Division of Transportation Planning (DOT), California Department of Water Resources (DWR), California Energy Commission, California Highway Patrol (CHP), California Native American Heritage Commission (NAHC), California Natural Resources Agency, California Public Utilities Commission (CPUC), California Regional Water Quality Control Board, San Francisco Bay Region 2 (RWQCB), Office of Historic Preservation, State Water Resources Control Board, Division of Drinking Water.

Personal observation#1 : *None of these agencies has any association with human health. CEQA reporting is not qualified enough to force the public to compromise on health concerns. Other agencies need to be involved to review this proposal, that are qualified to study the effect on " humans", not just wildlife and vegetation, or " environment. The checklist is completely devoid of our gravest humanitarian concerns. It is quite shocking that the project has not included any study to understand the potential impact of EMF waves on human lives, given that the transmission lines are potentially less than 60 feet from the closest dwellings. The city of Santa Clara needs to step in and have third party/ independent studies completed in favor of human health.*

Reference #2: Page 41 of report- Section 4.15. Electric and Magnetic Fields summary.

Personal observation#2 : *This consideration was completely absent earlier. Only after the residents raised their voices, this section was added. To our greatest disappointment, this section is copied over from an older report on the "South Loop Reconfiguration Project" from 2020. One would have expected that a new study would have been conducted for a project this size. The lack of due diligence and ignorance towards the specifics of this project are apparent and not acceptable. In fact we have found several sections of this older report as being reused across the entire report.*

The EMP map shared during the in person meeting had several flaws and we would like to question the viability of the study that was completed. What time of the day was the study completed and on what models were the values based on since these were done on assumption for the EMF values that would be there once the project is complete. Since we have seen the several sections of the report redundantly copied over from other reports, we would like a more detailed analysis of this report.

Regarding EMF concerns for human health, there are plenty of scientific studies that do indicate the grave concern on human health with EMF exposures and we cannot ignore this aspect. Here is a reference to an article and there are plenty of articles listed here under references:

https://psc.wi.gov/Documents/Brochures/EMF.pdf

There are not enough references listed in the draft report provided to us, and the explanation provided seems to be conveniently using studies that prove otherwise. This needs more investigation and references. The solution provided as raising the height of the poles and increasing the distance is non-existent. It was confirmed during the in person meeting that the design will not be altered and the height was already designed as required according to the SVP team present there. It seems that the preparers of this report did not even read the report after copying pasting from the old report as evident in the list of proposed solutions is not applicable here.

The live presentation on August 22nd showed the comparison of EMF values of household objects as a means to show that everyday household items carry a similar range of mG(milli Gauss) units. This comparison was inherently flawed since it mentioned that the household devices were producing those level at 1 feet while those indicated for 115KVf lines were at 60 feet. further these household devices do not operate 24X7 similar to the transmission lines.

There were a lot of citations of reports showcasing that no clear proof of EMF to human health exists but we would like to also point out certain states like Connecticut Department of Public Health have cited reports that have shown an increased incidence of childhood leukemia(Blood cancer) at avg exposure of only 3 mG. Also they have called out that some utility workers exposed to high levels of emf have increase risks of Lur Gehrig's disease.

They also call out that most impacts of EMF from high voltage lines dissipate at ~300 feet. These are available on Page 2 & Page 3 of this report: https://portal.ct.gov/-/media/departments-and-agencies/dph/dph/environmental_health/eoha/pdf/emffactsheet2008pdf.pdf

This report has citations from WHO , National Institute of Environmental Health Sciences and California Department of Health Services.

https://www.niehs.nih.gov/sites/default/files/health/materials/electric_and_magnetic_fields_associated_with_the_use_of_electric_power_questions_and_answers_english_508.pdf

Some other questions around the EMF study map shared during presentation on Aug 22 2024:

1. Have you conducted an existing EMF study to identify the current value of the community ?

2. Are your emf study values based on the cumulative, or interference of existing emf and potential emf.

3. Emf value was calculated based on existing studies. What was the delta between mathematical modeling and actual values (from existing structures).

4. What is the delta between underground and overhead structures' emf values?

5. Can you provide the same for Route options B and C?

6. What happens when electrification of rail lines happens- as this is already planned for the future? Have you potentially considered the cumulative EMF effect in coexistence of the high power lines and with railway lines' electrification? Will the EMF values not be much higher then?

7. Can you share the mathematical modeling maps of Emf for 115k, 230k and the next two higher values of the power line ?

8. Can you share Emf maps from existing structures of 115k, 230 k and the next 2 higher values of the power line?

9. Please share any emf related information that you have especially if it contains assumptions for any calculations so we can understand the effects of current project and future projects.

10. Why does the electric pole structure proposed have wider diameter at the top? Can you share the design of the top of the pole ? Can it be extended by adding another section by bolting, welding or any other method? If so, what extra voltage can be added to the line?

11. what is the proposed power consumption of 95054 zip code for the next 5, 10 and 15 years in the master plan ?

Reference #3

Page 174- Section 5.21- Corona and induced current effect:

Personal observation#3

The railway line's proximity to the proposed high transmission lines is very concerning. The centerline distance from proposed lines to railway line is aproximately 50 feet per google maps with some margin for error. As per the report there are no Corona rings proposed for the 115KV lines. There seems to be negligence in design in consideration of the hazards posed by these high voltage lines as Corona effect can transfer current to railway lines. All the residents are at a high risk of accidental hazards given the proximity of the railway line, this project is adding on to the hazards. This section is only stating information about what Corona effect is, as may be required by law, which by the way is again a copy paste from an old report. The only concern discussed in more depth is the audible noise level. The concerns are presented to imply that this is not significant by stating that 115KV lines pose less than significant risk**.**

Reference #4: Post meeting material from March 19th 2024
@https://santaclara.legistar.com/LegislationDetail.aspx?ID=6582415&GUID=E6E14646-3CF7-4D15-BB98-F18580696012&Options=&Search=

Personal observation#4: At surface level, it looks like Option #A was selected only based on Cost perspective, without any consideration to human health, young children, property values, Corona effect, long term sustainability perspective or any other factors. While its important to understand the results of CEQA study, its extremely critical to understand the negative impact of EMF on the many young children living around the proposed transmission lines. Without extensive research and study on the impact to young children and adult heath, we should not be approving such an incomplete proposal.

Page 6 of this document stated that the preferred route A cost of construction is $9.5 million. In discussions with several real estate agents in the region, I have unanimously found all to agree that the real estate values of residences in close proximity to power lines goes down. Its hard to find potential buyers and most folks refrain from buying a house too close to high power transmission lines. There are 1000 plus residences in the area affected by this project. Even if we were to make very rough assumptions, and assume minimal cost reduction in property values and take an average loss of

$100,000 per property in the current year, that goes to $100,000,000 of loss of equity to the public. This is not even accounting the businesses affected by this project. This long explanation was to raise a point that if the selection of route A was saving money to the city, this is costing a huge financial loss to the public, which is not acceptable. This decrease in property values will also directly impact the tax collection by the Santa Clara Assessor and result in lower tax revenue coming into the city of Santa Clara.

Reference #5 : Page 49 of report- Figure 5.1-2. Wall separating residences and Lafayette Street.

Personal observation#5: *The picture is taken conveniently from the other side of the railway line which is actually Kingsbury street, inside a private community and not Lafayette street. This is further away from the proposed SVP lines. This is very misleading; see snapshots taken from Google maps below*

And this is what is included on the report:

Figure 5.1-2. Wall Separating Residences and Lafayette Street

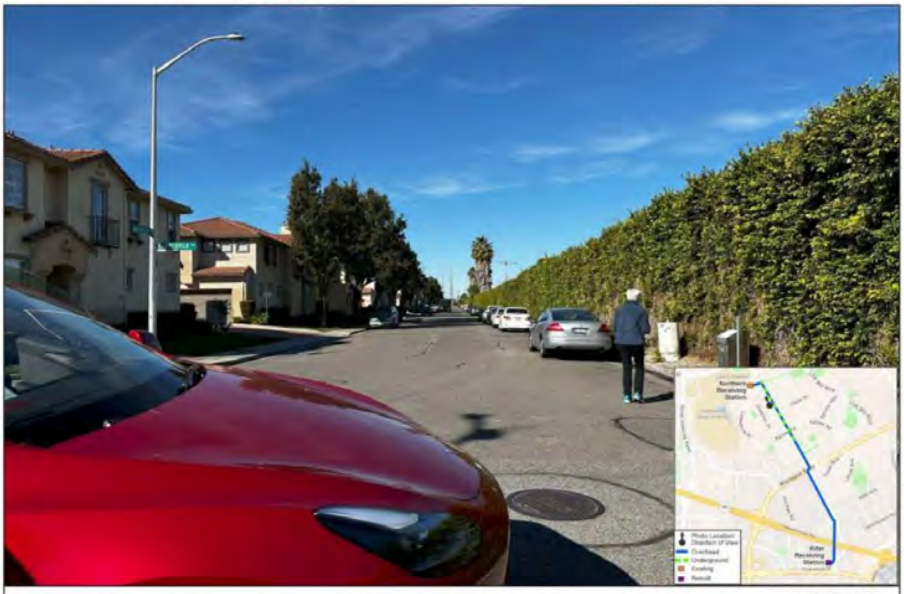

Figure 5.1-2
Wall Separating Residences and Lafayette Street

The Mission Garden Townhome community has no walls as such and the main entry to residences face the road directly and are the most impacted. There are several other single family homes on Lafayette street with the same impact, having an entryway directly on the street. This and including other citations of reusing sections of older reports, is all in all absolutely unacceptable and instills distrust. This further shows incompetency of the agency/ agencies preparing this report.

Conclusion: *This project's initial study needs to expand beyond CEQA for approval from the public. The limited scope of CEQA has failed to address the following concerns we have:*

- *Health hazards due to EMF levels.- This is by far the gravest concern and CEQA is clearly not qualified to study that.*
- *Reduced property values- several references provided below.*
- *Loss of Aesthetic appeal for potential real estate buyers/ new and current businesses.*
- *Increase in audible noise levels during and post construction, which is already high in the area with presence of railway line and air traffic route.*
- *Increased fire hazard/ risk of other accidents.*
- *Induced current on railway lines with close proximity/ corona effect- CEQA report did not clearly address this for a 115KV line.*
- *Economic effect on the community from small to larger scale based on all of the above.*

*We demand further investigation and revisit other routes or proposals to resolve the power needs of the city. We have to ensure our and our kids' health is not at stake in the name of development and infrastructure and are not in agreement for this project to move forward****. We cannot approve this to move forward as of now given the lack of study and absence of a satisfactory solution/ mitigation provided in favor/ assurance to public health.***

Additional References:

Research on effects of EMF on humans:

1. ***https://www.ncbi.nlm.nih.gov/pmc/articles/PMC6025786/***

This research reinforces the concerns of EMF exposure effect on human health.

2. ***https://www.epa.gov/radtown/electric-and-magnetic-fields-power-lines***

This resource suggests taking precautions and keeping distance or limiting exposure. Residents would no longer have either of these two options per the current proposals if they are living there 24-7.

What You Can Do

If you are concerned about possible health risks from electric and magnetic fields, you can:

- **Increase the distance between yourself and the source.** The greater the distance between you and the source of EMF, the lower your exposure.
- **Limit the time spent around the source.** The less time you spend near EMF, the lower your exposure.

3. ***https://www.fastexpert.com/blog/should-i-buy-a-house-near-power-lines/***

These are points of view from a real estate expert who clearly states that property value declines proportionately to the distance of the property from high tension lines. People have apprehensions whether or not research clearly defines the risk. Potential buyers might have low priority for a property too close to a high tension power line.

4. ***https://orchard.com/blog/posts/power-lines-and-property-value***

Another research on real estate values lowered due to high tension power lines proximity.

Thank you,
Venkat Patchigolla
2102 Payne Pl, Santa Clara, CA-95054

Email: NRS-KRS 115 kV T-Line

From: Aparna Raman <aparna.vijay@gmail.com>
Sent: Thursday, August 29, 2024 7:31 PM
To: NRS-KRS Project; mayorandcouncil@santaclaraca.gov; info@siliconvalleypower.com; planningcommission@santaclaraca.gov; manager@santaclaraca.gov; AJackman@santaclaraca.gov
Subject: Concerns Regarding Upcoming High Power Electric Wire Poles in Our Community for the upcoming SVP project connecting the Northern Receiving Station NRS to Kifer receiving station (KRS)- NRS-KRS 115kV Transmission Line Project

To Whomsoever it may concern,

We are residents of Santa Clara that will be negatively impacted by the "NRS-KRS 115kV Transmission Line Project". We have collectively reviewed the draft Initial Study/ Mitigated Negative declaration for "NRS-KRS 115kV Transmission Line Project" from July 2024. After reviewing this report and also attending the virtual and in person meetings, here are some references to emphasize our various concerns.

Reference #1 : CEQA's reporting includes these State reviewing agencies: California Air Resources Board (ARB), California Department of Fish and Wildlife, Bay Delta Region 3 (CDFW), California Department of Forestry and Fire Protection (CAL FIRE), California Department of Parks and Recreation, California Department of Toxic Substances Control (DTSC), California Department of Transportation, District 4 (DOT), California Department of Transportation, Division of Aeronautics (DOT), California Department of Transportation, Division of Transportation Planning (DOT), California Department of Water Resources (DWR), California Energy Commission, California Highway Patrol (CHP), California Native American Heritage Commission (NAHC), California Natural Resources Agency, California Public Utilities Commission (CPUC), California Regional Water Quality Control Board, San Francisco Bay Region 2 (RWQCB), Office of Historic Preservation, State Water Resources Control Board, Division of Drinking Water.

Personal observation#1 : *None of these agencies has any association with human health. CEQA reporting is not qualified enough to force the public to compromise on health concerns. Other agencies need to be involved to review this proposal, that are qualified to study the effect on " humans", not just wildlife and vegetation, or " environment. The checklist is completely devoid of our gravest humanitarian concerns. It is quite shocking that the project has not included any study to understand the potential impact of EMF waves on human lives, given that the transmission lines are potentially less than 60 feet from the closest dwellings. The city of Santa Clara needs to step in and have third party/ independent studies completed in favor of human health.*

Reference #2: Page 41 of report- Section 4.15. Electric and Magnetic Fields summary.

Personal observation#2 : *This consideration was completely absent earlier. Only after the residents raised their voices, this section was added. To our greatest disappointment, this section is copied over from an older report on the "South Loop Reconfiguration Project" from 2020. One would have expected that a new study would have been conducted for a project this size. The lack of due diligence and ignorance towards the specifics of this project are apparent and not acceptable. In fact we have found several sections of this older report as being reused across the entire report.*

The EMP map shared during the in person meeting had several flaws and we would like to question the viability of the study that was completed. What time of the day was the study completed and on what models were the values based on since these were done on assumption for the EMF values that would

be there once the project is complete. Since we have seen the several sections of the report redundantly copied over from other reports, we would like a more detailed analysis of this report.

Regarding EMF concerns for human health, there are plenty of scientific studies that do indicate the grave concern on human health with EMF exposures and we cannot ignore this aspect. Here is a reference to an article and there are plenty of articles listed here under references:

https://psc.wi.gov/Documents/Brochures/EMF.pdf

There are not enough references listed in the draft report provided to us, and the explanation provided seems to be conveniently using studies that prove otherwise. This needs more investigation and references. The solution provided as raising the height of the poles and increasing the distance is non-existent. It was confirmed during the in person meeting that the design will not be altered and the height was already designed as required according to the SVP team present there. It seems that the preparers of this report did not even read the report after copying pasting from the old report as evident in the list of proposed solutions is not applicable here.

The live presentation on August 22nd showed the comparison of EMF values of household objects as a means to show that everyday household items carry a similar range of mG(milli Gauss) units. This comparison was inherently flawed since it mentioned that the household devices were producing those level at 1 feet while those indicated for 115KVf lines were at 60 feet. further these household devices do not operate 24X7 similar to the transmission lines.

There were a lot of citations of reports showcasing that no clear proof of EMF to human health exists but we would like to also point out certain states like Connecticut Department of Public Health have cited reports that have shown an increased incidence of childhood leukemia(Blood cancer) at avg exposure of only 3 mG. Also they have called out that some utility workers exposed to high levels of emf have increase risks of Lur Gehrig's disease.

They also call out that most impacts of EMF from high voltage lines dissipate at ~300 feet.

These are available on Page 2 & Page 3 of this report: https://portal.ct.gov/-/media/departments-and-agencies/dph/dph/environmental_health/eoha/pdf/emffactsheet2008pdf.pdf

This report has citations from WHO , National Institute of Environmental Health Sciences and California Department of Health Services.

https://www.niehs.nih.gov/sites/default/files/health/materials/electric_and_magnetic_fields_associated_with_the_use_of_electric_power_questions_and_answers_english_508.pdf

Reference #3

Page 174- Section 5.21- Corona and induced current effect:

Personal observation#3

The railway line's proximity to the proposed high transmission lines is very concerning. The centerline distance from proposed lines to railway line is aproximately 50 feet per google maps with some margin for error. As per the report there are no Corona rings proposed for the 115KV lines. There seems to be negligence in design in consideration of the hazards posed by these high voltage lines as Corona effect can transfer current to railway lines. All the residents are at a high risk of accidental hazards given the proximity of the railway line, this project is adding on to the hazards. This section is only stating information about what Corona effect is, as may be required by law, which by the way is again a copy paste from an old report. The only concern discussed in more depth is the audible noise level. The concerns are presented to imply that this is not significant by stating that 115KV lines pose less than significant risk**.**

Reference #4: Post meeting material from March 19th 2024
@https://santaclara.legistar.com/LegislationDetail.aspx?ID=6582415&GUID=E6E14646-3CF7-4D15-BB98-F18580696012&Options=&Search=

Personal observation#4: At surface level, it looks like Option #A was selected only based on Cost perspective, without any consideration to human health, young children, property values, Corona effect, long term sustainability perspective or any other factors. While its important to understand the results of CEQA study, its extremely critical to understand the negative impact of EMF on the many young children living around the proposed transmission lines. Without extensive research and study on the impact to young children and adult heath, we should not be approving such an incomplete proposal.

Page 6 of this document stated that the preferred route A cost of construction is $9.5 million. In discussions with several real estate agents in the region, I have unanimously found all to agree that the real estate values of residences in close proximity to power lines goes down. Its hard to find potential buyers and most folks refrain from buying a house too close to high power transmission lines. There are 1000 plus residences in the area affected by this project. Even if we were to make very rough assumptions, and assume minimal cost reduction in property values and take an average loss of $100,000 per property in the current year, that goes to $100,000,000 of loss of equity to the public. This is not even accounting the businesses affected by this project. This long explanation was to raise a point that if the selection of route A was saving money to the city, this is costing a huge financial loss to the public, which is not acceptable. This decrease in property values will also directly impact the tax collection by the Santa Clara Assessor and result in lower tax revenue coming into the city of Santa Clara.

Reference #5 : Page 49 of report- Figure 5.1-2. Wall separating residences and Lafayette Street.

Personal observation#5: *The picture is taken conveniently from the other side of the railway line which is actually Kingsbury street, inside a private community and not Lafayette street. This is further away from the proposed SVP lines. This is very misleading; see snapshots taken from Google maps below*

-

And this is what is included on the report:

The Mission Garden Townhome community has no walls as such and the main entry to residences face the road directly and are the most impacted. There are several other single family homes on Lafayette street with the same impact, having an entryway directly on the street. This and including other citations of reusing sections of older reports, is all in all absolutely unacceptable and instills distrust. This further shows incompetency of the agency/ agencies preparing this report.

Conclusion: *This project's initial study needs to expand beyond CEQA for approval from the public. The limited scope of CEQA has failed to address the following concerns we have:*

- *Health hazards due to EMF levels.- This is by far the gravest concern and CEQA is clearly not qualified to study that.*
- *Reduced property values- several references provided below.*
- *Loss of Aesthetic appeal for potential real estate buyers/ new and current businesses.*
- *Increase in audible noise levels during and post construction, which is already high in the area with presence of railway line and air traffic route.*
- *Increased fire hazard/ risk of other accidents.*
- *Induced current on railway lines with close proximity/ corona effect- CEQA report did not clearly address this for a 115KV line.*
- *Economic effect on the community from small to larger scale based on all of the above.*

We demand further investigation and revisit other routes or proposals to resolve the power needs of the city. We have to ensure our and our kids' health is not at stake in the name of development and infrastructure and are not in agreement for this project to move forward. ***We cannot approve this to move forward as of now given the lack of study and absence of a satisfactory solution/ mitigation provided in favor/ assurance to public health.***

Thank you for your time.

Best regards,
Aparna Raman
4126086258

What You Can Do

If you are concerned about possible health risks from electric and magnetic fields, you can:

- **Increase the distance between yourself and the source.** The greater the distance between you and the source of EMF, the lower your exposure.
- **Limit the time spent around the source.** The less time you spend near EMF, the lower your exposure.

Aparna

Email: NRS-KRS 115 kV T-Line

From: Gayathiri Lakshmanan <gayathiri.laxman@gmail.com>
Sent: Thursday, August 29, 2024 7:04 PM
To: NRS-KRS Project; mayorandcouncil@santaclaraca.gov; info@siliconvalleypower.com; planningcommission@santaclaraca.gov; manager@santaclaraca.gov; AJackman@santaclaraca.gov
Subject: Concerns Regarding Upcoming High Power Electric Wire Poles in Our Community for the upcoming SVP project connecting the Northern Receiving Station NRS to Kifer receiving station (KRS)- NRS-KRS 115kV Transmission Line Project

To Whomsoever it may concern,
We are residents of Santa Clara that will be negatively impacted by the "NRS-KRS 115kV Transmission Line Project". We have collectively reviewed the draft Initial Study/ Mitigated Negative declaration for "NRS-KRS 115kV Transmission Line Project" from July 2024. After reviewing this report and also attending the virtual and in person meetings, here are some references to emphasize our various concerns.
Reference #1 : CEQA's reporting includes these State reviewing agencies: California Air Resources Board (ARB), California Department of Fish and Wildlife, Bay Delta Region 3 (CDFW), California Department of Forestry and Fire Protection (CAL FIRE), California Department of Parks and Recreation, California Department of Toxic Substances Control (DTSC), California Department of Transportation, District 4 (DOT), California Department of Transportation, Division of Aeronautics (DOT), California Department of Transportation, Division of Transportation Planning (DOT), California Department of Water Resources (DWR), California Energy Commission, California Highway Patrol (CHP), California Native American Heritage Commission (NAHC), California Natural Resources Agency, California Public Utilities Commission (CPUC), California Regional Water Quality Control Board, San Francisco Bay Region 2 (RWQCB), Office of Historic Preservation, State Water Resources Control Board, Division of Drinking Water.
Personal observation#1 : None of these agencies has any association with human health. CEQA reporting is not qualified enough to force the public to compromise on health concerns. Other agencies need to be involved to review this proposal, that are qualified to study the effect on " humans", not just wildlife and vegetation, or " environment. The checklist is completely devoid of our gravest humanitarian concerns. It is quite shocking that the project has not included any study to understand the potential impact of EMF waves on human lives, given that the transmission lines are potentially less than 60 feet from the closest dwellings. The city of Santa Clara needs to step in and have third party/ independent studies completed in favor of human health.

Reference #2: Page 41 of report- Section 4.15. Electric and Magnetic Fields summary.
Personal observation#2 : This consideration was completely absent earlier. Only after the residents raised their voices, this section was added. To our greatest disappointment, this section is copied over from an older report on the "South Loop Reconfiguration Project" from 2020. One would have expected that a new study would have been conducted for a project this size. The lack of due diligence and ignorance towards the specifics of this project are apparent and not acceptable. In fact we have found several sections of this older report as being reused across the entire report.
The EMP map shared during the in person meeting had several flaws and we would like to question the viability of the study that was completed. What time of the day was the study completed and on what models were the values based on since these were done on assumption for the EMF values that would be there once the project is complete. Since we have seen the several sections of the report redundantly copied over from other reports, we would like a more detailed analysis of this report.
Regarding EMF concerns for human health, there are plenty of scientific studies that do indicate the grave concern on human health with EMF exposures and we cannot ignore this aspect. Here is a reference to an article and there are plenty of articles listed here under references:
https://psc.wi.gov/Documents/Brochures/EMF.pdf

There are not enough references listed in the draft report provided to us, and the explanation provided seems to be conveniently using studies that prove otherwise. This needs more investigation and references. The solution provided as raising the height of the poles and increasing the distance is non-existent. It was confirmed during the in person meeting that the design will not be altered and the height was already designed as required according to the SVP team present there. It seems that the preparers of this report did not even read the report after copying pasting from the old report as evident in the list of proposed solutions is not applicable here.
The live presentation on August 22nd showed the comparison of EMF values of household objects as a means to show that everyday household items carry a similar range of mG(milli Gauss) units. This comparison was inherently flawed since it mentioned that the household devices were producing those level at 1 feet while those indicated for 115KVf lines were at 60 feet. further these household devices do not operate 24X7 similar to the transmission lines.
There were a lot of citations of reports showcasing that no clear proof of EMF to human health exists but we would like to also point out certain states like Connecticut Department of Public Health have cited reports that have shown an increased incidence of childhood leukemia(Blood cancer) at avg exposure of only 3 mG. Also they have called out that some utility workers exposed to high levels of emf have increase risks of Lur Gehrig's disease.
They also call out that most impacts of EMF from high voltage lines dissipate at ~300 feet.
These are available on Page 2 & Page 3 of this report: https://portal.ct.gov/-/media/departments-and-agencies/dph/dph/environmental_health/eoha/pdf/emffactsheet2008pdf.pdf
This report has citations from WHO , National Institute of Environmental Health Sciences and California Department of Health Services.
https://www.niehs.nih.gov/sites/default/files/health/materials/electric_and_magnetic_fields_associated_with_the_use_of_electric_power_questions_and_answers_english_508.pdf

Reference #3
Page 174- Section 5.21- Corona and induced current effect:
Personal observation#3
The railway line's proximity to the proposed high transmission lines is very concerning. The centerline distance from proposed lines to railway line is aproximately 50 feet per google maps with some margin for error. As per the report there are no Corona rings proposed for the 115KV lines. There seems to be negligence in design in consideration of the hazards posed by these high voltage lines as Corona effect can transfer current to railway lines. All the residents are at a high risk of accidental hazards given the proximity of the railway line, this project is adding on to the hazards. This section is only stating information about what Corona effect is, as may be required by law, which by the way is again a copy paste from an old report. The only concern discussed in more depth is the audible noise level. The concerns are presented to imply that this is not significant by stating that 115KV lines pose less than significant risk.

Reference #4: Post meeting material from March 19th 2024
@https://santaclara.legistar.com/LegislationDetail.aspx?ID=6582415&GUID=E6E14646-3CF7-4D15-BB98-F18580696012&Options=&Search=
Personal observation#4: At surface level, it looks like Option #A was selected only based on Cost perspective, without any consideration to human health, young children, property values, Corona effect, long term sustainability perspective or any other factors. While its important to understand the results of CEQA study, its extremely critical to understand the negative impact of EMF on the many young children living around the proposed transmission lines. Without extensive research and study on the impact to young children and adult heath, we should not be approving such an incomplete proposal.
Page 6 of this document stated that the preferred route A cost of construction is $9.5 million. In discussions with several real estate agents in the region, I have unanimously found all to agree that the real estate values of residences in close proximity to power lines goes down. Its hard to find potential buyers and most folks refrain from buying a house too close to high power transmission lines. There are

1000 plus residences in the area affected by this project. Even if we were to make very rough assumptions, and assume minimal cost reduction in property values and take an average loss of $100,000 per property in the current year, that goes to $100,000,000 of loss of equity to the public. This is not even accounting the businesses affected by this project. This long explanation was to raise a point that if the selection of route A was saving money to the city, this is costing a huge financial loss to the public, which is not acceptable. This decrease in property values will also directly impact the tax collection by the Santa Clara Assessor and result in lower tax revenue coming into the city of Santa Clara.

Reference #5 : Page 49 of report- Figure 5.1-2. Wall separating residences and Lafayette Street.
Personal observation#5: The picture is taken conveniently from the other side of the railway line which is actually Kingsbury street, inside a private community and not Lafayette street. This is further away from the proposed SVP lines. This is very misleading; see snapshots taken from Google maps below

And this is what is included on the report:

The Mission Garden Townhome community has no walls as such and the main entry to residences face the road directly and are the most impacted. There are several other single family homes on Lafayette street with the same impact, having an entryway directly on the street. This and including other citations of reusing sections of older reports, is all in all absolutely unacceptable and instills distrust. This further shows incompetency of the agency/ agencies preparing this report.
Conclusion: This project's initial study needs to expand beyond CEQA for approval from the public. The limited scope of CEQA has failed to address the following concerns we have:
Health hazards due to EMF levels.- This is by far the gravest concern and CEQA is clearly not qualified to study that.
Reduced property values- several references provided below.
Loss of Aesthetic appeal for potential real estate buyers/ new and current businesses.
Increase in audible noise levels during and post construction, which is already high in the area with presence of railway line and air traffic route.
Increased fire hazard/ risk of other accidents.
Induced current on railway lines with close proximity/ corona effect- CEQA report did not clearly address this for a 115KV line.
Economic effect on the community from small to larger scale based on all of the above.
We demand further investigation and revisit other routes or proposals to resolve the power needs of the city. We have to ensure our and our kids' health is not at stake in the name of development and infrastructure and are not in agreement for this project to move forward. We cannot approve this to move forward as of now given the lack of study and absence of a satisfactory solution/ mitigation provided in favor/ assurance to public health.

Additional References:
Research on effects of EMF on humans:
https://www.ncbi.nlm.nih.gov/pmc/articles/PMC6025786/
This research reinforces the concerns of EMF exposure effect on human health.
https://www.epa.gov/radtown/electric-and-magnetic-fields-power-lines
This resource suggests taking precautions and keeping distance or limiting exposure. Residents would no longer have either of these two options per the current proposals if they are living there 24-7.

https://www.fastexpert.com/blog/should-i-buy-a-house-near-power-lines/
These are points of view from a real estate expert who clearly states that property value declines proportionately to the distance of the property from high tension lines. People have apprehensions whether or not research clearly defines the risk. Potential buyers might have low priority for a property too close to a high tension power line.
https://orchard.com/blog/posts/power-lines-and-property-value
Another research on real estate values lowered due to high tension power lines proximity.

Email: NRS-KRS 115 kV T-Line

From: Prashant Tiwari <ptiwari2009@yahoo.com>
Sent: Thursday, August 29, 2024 7:03 PM
To: NRS-KRS Project; mayorandcouncil@santaclaraca.gov; info@siliconvalleypower.com; planningcommission@santaclaraca.gov; manager@santaclaraca.gov; AJackman@santaclaraca.gov
Subject: Concerns Regarding Upcoming High Power Electric Wire Poles in Our Community for the upcoming SVP project connecting the Northern Receiving Station NRS to Kifer receiving station (KRS)- NRS-KRS 115kV Transmission Line Project

To Whomsoever it may concern,

We are residents of Santa Clara that will be negatively impacted by the "NRS-KRS 115kV Transmission Line Project". We have collectively reviewed the draft Initial Study/ Mitigated Negative declaration for "NRS-KRS 115kV Transmission Line Project" from July 2024. After reviewing this report and also attending the virtual and in person meetings, here are some references to emphasize our various concerns.

Reference #1 : CEQA's reporting includes these State reviewing agencies: California Air Resources Board (ARB), California Department of Fish and Wildlife, Bay Delta Region 3 (CDFW), California Department of Forestry and Fire Protection (CAL FIRE), California Department of Parks and Recreation, California Department of Toxic Substances Control (DTSC), California Department of Transportation, District 4 (DOT), California Department of Transportation, Division of Aeronautics (DOT), California Department of Transportation, Division of Transportation Planning (DOT), California Department of Water Resources (DWR), California Energy Commission, California Highway Patrol (CHP), California Native American Heritage Commission (NAHC), California Natural Resources Agency, California Public Utilities Commission (CPUC), California Regional Water Quality Control Board, San Francisco Bay Region 2 (RWQCB), Office of Historic Preservation, State Water Resources Control Board, Division of Drinking Water.

Personal observation#1 : *None of these agencies has any association with human health. CEQA reporting is not qualified enough to force the public to compromise on health concerns. Other agencies need to be involved to review this proposal, that are qualified to study the effect on " humans", not just wildlife and vegetation, or " environment. The checklist is completely devoid of our gravest humanitarian concerns. It is quite shocking that the project has not included any study to understand the potential impact of EMF waves on human lives, given that the transmission lines are potentially less than 60 feet from the closest dwellings. The city of Santa Clara needs to step in and have third party/ independent studies completed in favor of human health.*

Reference #2: Page 41 of report- Section 4.15. Electric and Magnetic Fields summary.

Personal observation#2 : *This consideration was completely absent earlier. Only after the residents raised their voices, this section was added. To our greatest disappointment, this section is copied over from an older report on the "South Loop Reconfiguration Project" from 2020. One would have expected that a new study would have been conducted for a project this size. The lack of due diligence and ignorance towards the specifics of this project are apparent and not acceptable. In fact we have found several sections of this older report as being reused across the entire report.*

The EMP map shared during the in person meeting had several flaws and we would like to question the viability of the study that was completed. What time of the day was the study completed and on what models were the values based on since these were done on assumption for the EMF values that would be there once the project is complete. Since we have seen the several sections of the report redundantly copied over from other reports, we would like a more detailed analysis of this report.

Regarding EMF concerns for human health, there are plenty of scientific studies that do indicate the grave concern on human health with EMF exposures and we cannot ignore this aspect. Here is a reference to an article and there are plenty of articles listed here under references:

https://psc.wi.gov/Documents/Brochures/EMF.pdf

There are not enough references listed in the draft report provided to us, and the explanation provided seems to be conveniently using studies that prove otherwise. This needs more investigation and references. The solution provided as raising the height of the poles and increasing the distance is non-existent. It was confirmed during the in person meeting that the design will not be altered and the height was already designed as required according to the SVP team present there. It seems that the preparers of this report did not even read the report after copying pasting from the old report as evident in the list of proposed solutions is not applicable here.

The live presentation on August 22nd showed the comparison of EMF values of household objects as a means to show that everyday household items carry a similar range of mG(milli Gauss) units. This comparison was inherently flawed since it mentioned that the household devices were producing those level at 1 feet while those indicated for 115KVf lines were at 60 feet. further these household devices do not operate 24X7 similar to the transmission lines.

There were a lot of citations of reports showcasing that no clear proof of EMF to human health exists but we would like to also point out certain states like Connecticut Department of Public Health have cited reports that have shown an increased incidence of childhood leukemia(Blood cancer) at avg exposure of only 3 mG. Also they have called out that some utility workers exposed to high levels of emf have increase risks of Lur Gehrig's disease.

They also call out that most impacts of EMF from high voltage lines dissipate at ~300 feet.

These are available on Page 2 & Page 3 of this report: https://portal.ct.gov/-/media/departments-and-agencies/dph/dph/environmental_health/eoha/pdf/emffactsheet2008pdf.pdf

This report has citations from WHO , National Institute of Environmental Health Sciences and California Department of Health Services.

https://www.niehs.nih.gov/sites/default/files/health/materials/electric_and_magnetic_fields_associated_with_the_use_of_electric_power_questions_and_answers_english_508.pdf

Reference #3

Page 174- Section 5.21- Corona and induced current effect:

Personal observation#3

The railway line's proximity to the proposed high transmission lines is very concerning. The centerline distance from proposed lines to railway line is aproximately 50 feet per google maps with some margin for error. As per the report there are no Corona rings proposed for the 115KV lines. There seems to be negligence in design in consideration of the hazards posed by these high voltage lines as Corona effect can transfer current to railway lines. All the residents are at a high risk of accidental hazards given the proximity of the railway line, this project is adding on to the hazards. This section is only stating information about what Corona effect is, as may be required by law, which by the way is again a copy paste from an old report. The only concern discussed in more depth is the audible noise level. The concerns are presented to imply that this is not significant by stating that 115KV lines pose less than significant risk**.**

Reference #4: Post meeting material from March 19th 2024
@https://santaclara.legistar.com/LegislationDetail.aspx?ID=6582415&GUID=E6E14646-3CF7-4D15-BB98-F18580696012&Options=&Search=

Personal observation#4: At surface level, it looks like Option #A was selected only based on Cost perspective, without any consideration to human health, young children, property values, Corona effect, long term sustainability perspective or any other factors. While its important to understand the results of CEQA study, its extremely critical to understand the negative impact of EMF on the many young children living around the proposed transmission lines. Without extensive research and study on the impact to young children and adult heath, we should not be approving such an incomplete proposal.

Page 6 of this document stated that the preferred route A cost of construction is $9.5 million. In discussions with several real estate agents in the region, I have unanimously found all to agree that the real estate values of residences in close proximity to power lines goes down. Its hard to find potential buyers and most folks refrain from buying a house too close to high power transmission lines. There are 1000 plus residences in the area affected by this project. Even if we were to make very rough assumptions, and assume minimal cost reduction in property values and take an average loss of $100,000 per property in the current year, that goes to $100,000,000 of loss of equity to the public. This is not even accounting the businesses affected by this project. This long explanation was to raise a point that if the selection of route A was saving money to the city, this is costing a huge financial loss to the public, which is not acceptable. This decrease in property values will also directly impact the tax collection by the Santa Clara Assessor and result in lower tax revenue coming into the city of Santa Clara.

Reference #5 : Page 49 of report- Figure 5.1-2. Wall separating residences and Lafayette Street.

Personal observation#5: *The picture is taken conveniently from the other side of the railway line which is actually Kingsbury street, inside a private community and not Lafayette street. This is further away from the proposed SVP lines. This is very misleading; see snapshots taken from Google maps below*

And this is what is included on the report:

NRS-KRS 115kV Transmission Line Project 5.1. Aesthetics

Figure 5.1-2. Wall Separating Residences and Lafayette Street

Figure 5.1-2
Wall Separating Residences and Lafayette Street

July 2024 5.1-5 Administrative Draft MND/IS

The Mission Garden Townhome community has no walls as such and the main entry to residences face the road directly and are the most impacted. There are several other single family homes on Lafayette

street with the same impact, having an entryway directly on the street. This and including other citations of reusing sections of older reports, is all in all absolutely unacceptable and instills distrust. This further shows incompetency of the agency/ agencies preparing this report.

Conclusion: *This project's initial study needs to expand beyond CEQA for approval from the public. The limited scope of CEQA has failed to address the following concerns we have:*

- *Health hazards due to EMF levels.- This is by far the gravest concern and CEQA is clearly not qualified to study that.*
- *Reduced property values- several references provided below.*
- *Loss of Aesthetic appeal for potential real estate buyers/ new and current businesses.*
- *Increase in audible noise levels during and post construction, which is already high in the area with presence of railway line and air traffic route.*
- *Increased fire hazard/ risk of other accidents.*
- *Induced current on railway lines with close proximity/ corona effect- CEQA report did not clearly address this for a 115KV line.*
- *Economic effect on the community from small to larger scale based on all of the above.*

*We demand further investigation and revisit other routes or proposals to resolve the power needs of the city. We have to ensure our and our kids' health is not at stake in the name of development and infrastructure and are not in agreement for this project to move forward**. We cannot approve this to move forward as of now given the lack of study and absence of a satisfactory solution/ mitigation provided in favor/ assurance to public health.***

Additional References:

Research on effects of EMF on humans:

1. ***https://www.ncbi.nlm.nih.gov/pmc/articles/PMC6025786/***

This research reinforces the concerns of EMF exposure effect on human health.

2. ***https://www.epa.gov/radtown/electric-and-magnetic-fields-power-lines***

This resource suggests taking precautions and keeping distance or limiting exposure. Residents would no longer have either of these two options per the current proposals if they are living there 24-7.

What You Can Do

If you are concerned about possible health risks from electric and magnetic fields, you can:

- **Increase the distance between yourself and the source.** The greater the distance between you and the source of EMF, the lower your exposure.
- **Limit the time spent around the source.** The less time you spend near EMF, the lower your exposure.

3. ***https://www.fastexpert.com/blog/should-i-buy-a-house-near-power-lines/***

These are points of view from a real estate expert who clearly states that property value declines proportionately to the distance of the property from high tension lines. People have apprehensions whether or not research clearly defines the risk. Potential buyers might have low priority for a property too close to a high tension power line.

4. ***How Much Do Power Lines Decrease My Property Value?***

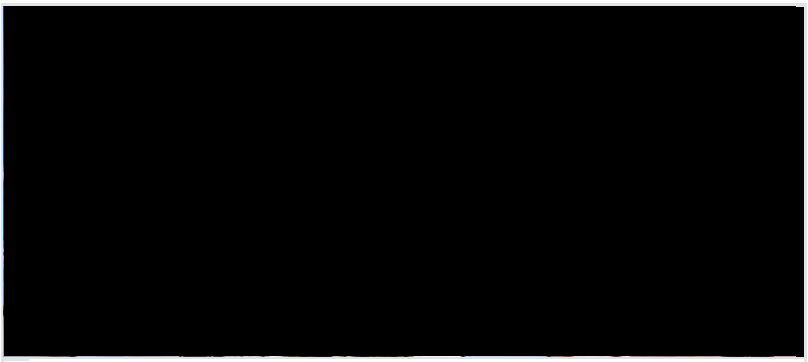

How Much Do Power Lines Decrease My Property Value?

Breaking down the pros and cons of living in, and selling, a home near power lines. How close is too close, for ...

Another research on real estate values lowered due to high tension power lines proximity.

Thanks & regards,
Prashant

Email: NRS-KRS 115 kV T-Line

From: Srinivas Reddy <saruva@gmail.com>
Sent: Thursday, August 29, 2024 6:32 PM
To: NRS-KRS Project; mayorandcouncil@santaclaraca.gov; info@siliconvalleypower.com; planningcommission@santaclaraca.gov; manager@santaclaraca.gov; AJackman@santaclaraca.gov
Subject: Concerns Regarding Upcoming High Power Electric Wire Poles in Our Community for the upcoming SVP project connecting the Northern Receiving Station NRS to Kifer receiving station (KRS)- NRS-KRS 115kV Transmission Line Project
Attachments:
AD_4nXeZzQR0oSUEm3NRpEKa6LSHo6_F5M15PcnpvEOOLZ0vt5VMSAx120kdRV9J4VUODqz2gQcG_uKHHTzOT4mw8yQ7XOoIG1DdjAsuP_i3KBOm1U6bckoGYexH0QJFN-qSjFPGyr5xs_DqaCfnW3MzzTb4kEU.png; AD_4nXdeFUSPmn5nFK4UH4PDTG7B0trWJOOk1VVylzaG0u4asqOnyx6-ap37ubjju9WfhUVhCmHE0SVRhcF2z_Qrhibqikqomv1reC2eJ0FJu86JYmj6q4LavVii9xXkrdcK986gfUJooZoDUY4vROKJ9WULhrny.png; AD_4nXecpDxO1WfUZJNROY_veSjVmOrZA_7GQ0OlWYbfZOiztUstoEjt4hiiiDdAzq2omyc5ou3vQgv8TU6Vzx4SwMLCrCm0Zac-BDL5dvmbbMYs3Bf4K1R-fHaQb-SbDk5Vn6KHg04vkunWTDtbyCy8VN5iqdfM.png; image.png; image.png; image.png; AD_4nXfBqpD8BTbuDuIlikE5I6Sc5JJI0X_pg9nktaN0plKmhW8c0lwEEX59kNOk_OJKCMTvCuRMIoww5DVd00zT1_HE2QqxjBS1nYfaH8TZspUq2lWMA0Gimdu-vZkH7bs2Jt6Sn3SKEG9_bUh_Ze3RljufFzk.png; image.png

Subject: **Concerns Regarding Upcoming High Power Electric Wire Poles in Our Community for the upcoming SVP project connecting the Northern Receiving Station NRS to Kifer receiving station (KRS)- *NRS-KRS 115kV Transmission Line Project***

To Whomsoever it may concern,

We are residents of Santa Clara that will be negatively impacted by the "NRS-KRS 115kV Transmission Line Project". We have collectively reviewed the draft Initial Study/ Mitigated Negative declaration for "NRS-KRS 115kV Transmission Line Project" from July 2024. After reviewing this report and also attending the virtual and in person meetings, here are some references to emphasize our various concerns.

Reference #1 : CEQA's reporting includes these State reviewing agencies: California Air Resources Board (ARB), California Department of Fish and Wildlife, Bay Delta Region 3 (CDFW), California Department of Forestry and Fire Protection (CAL FIRE), California Department of Parks and Recreation, California Department of Toxic Substances Control (DTSC), California Department of Transportation, District 4 (DOT), California Department of Transportation, Division of Aeronautics (DOT), California Department of Transportation, Division of Transportation Planning (DOT), California Department of Water Resources (DWR), California Energy Commission, California Highway Patrol (CHP), California Native American Heritage Commission (NAHC), California Natural Resources Agency, California Public Utilities Commission (CPUC), California Regional Water Quality Control Board, San Francisco Bay Region 2 (RWQCB), Office of Historic Preservation, State Water Resources Control Board, Division of Drinking Water.

Personal observation#1 : *None of these agencies has any association with human health. CEQA reporting is not qualified enough to force the public to compromise on health concerns. Other agencies need to be involved to review this proposal, that are qualified to study the effect on " humans", not just wildlife and vegetation, or " environment. The checklist is completely devoid of our gravest humanitarian concerns. It is quite shocking that the project has not included any study to understand the potential impact of EMF waves on human lives, given that the transmission lines are potentially less than 60 feet*

from the closest dwellings. The city of Santa Clara needs to step in and have third party/ independent studies completed in favor of human health.

Reference #2: Page 41 of report- Section 4.15. Electric and Magnetic Fields summary.

Personal observation#2 : *This consideration was completely absent earlier. Only after the residents raised their voices, this section was added. To our greatest disappointment, this section is copied over from an older report on the "South Loop Reconfiguration Project" from 2020. One would have expected that a new study would have been conducted for a project this size. The lack of due diligence and ignorance towards the specifics of this project are apparent and not acceptable. In fact we have found several sections of this older report as being reused across the entire report.*

The EMP map shared during the in person meeting had several flaws and we would like to question the viability of the study that was completed. What time of the day was the study completed and on what models were the values based on since these were done on assumption for the EMF values that would be there once the project is complete. Since we have seen the several sections of the report redundantly copied over from other reports, we would like a more detailed analysis of this report.

Regarding EMF concerns for human health, there are plenty of scientific studies that do indicate the grave concern on human health with EMF exposures and we cannot ignore this aspect. Here is a reference to an article and there are plenty of articles listed here under references:

https://psc.wi.gov/Documents/Brochures/EMF.pdf

There are not enough references listed in the draft report provided to us, and the explanation provided seems to be conveniently using studies that prove otherwise. This needs more investigation and references. The solution provided as raising the height of the poles and increasing the distance is non-existent. It was confirmed during the in person meeting that the design will not be altered and the height was already designed as required according to the SVP team present there. It seems that the preparers of this report did not even read the report after copying pasting from the old report as evident in the list of proposed solutions is not applicable here.

The live presentation on August 22nd showed the comparison of EMF values of household objects as a means to show that everyday household items carry a similar range of mG(milli Gauss) units. This comparison was inherently flawed since it mentioned that the household devices were producing those level at 1 feet while those indicated for 115KVf lines were at 60 feet. further these household devices do not operate 24X7 similar to the transmission lines.

There were a lot of citations of reports showcasing that no clear proof of EMF to human health exists but we would like to also point out certain states like Connecticut Department of Public Health have cited reports that have shown an increased incidence of childhood leukemia(Blood cancer) at avg exposure of only 3 mG. Also they have called out that some utility workers exposed to high levels of emf have increase risks of Lur Gehrig's disease.

They also call out that most impacts of EMF from high voltage lines dissipate at ~300 feet.

These are available on Page 2 & Page 3 of this report: https://portal.ct.gov/-/media/departments-and-agencies/dph/dph/environmental_health/eoha/pdf/emffactsheet2008pdf.pdf

This report has citations from WHO , National Institute of Environmental Health Sciences and California Department of Health Services.

https://www.niehs.nih.gov/sites/default/files/health/materials/electric_and_magnetic_fields_associated_with_the_use_of_electric_power_questions_and_answers_english_508.pdf

Reference #3

Page 174- Section 5.21- Corona and induced current effect:

Personal observation#3

The railway line's proximity to the proposed high transmission lines is very concerning. The centerline distance from proposed lines to railway line is aproximately 50 feet per google maps with some margin for error. As per the report there are no Corona rings proposed for the 115KV lines. There seems to be negligence in design in consideration of the hazards posed by these high voltage lines as Corona effect can transfer current to railway lines. All the residents are at a high risk of accidental hazards given the proximity of the railway line, this project is adding on to the hazards. This section is only stating information about what Corona effect is, as may be required by law, which by the way is again a copy paste from an old report. The only concern discussed in more depth is the audible noise level. The concerns are presented to imply that this is not significant by stating that 115KV lines pose less than significant risk**.**

Reference #4: Post meeting material from March 19th 2024 @https://santaclara.legistar.com/LegislationDetail.aspx?ID=6582415&GUID=E6E14646-3CF7-4D15-BB98-F18580696012&Options=&Search=

Personal observation#4: At surface level, it looks like Option #A was selected only based on Cost perspective, without any consideration to human health, young children, property values, Corona effect, long term sustainability perspective or any other factors. While its important to understand the results of CEQA study, its extremely critical to understand the negative impact of EMF on the many young children living around the proposed transmission lines. Without extensive research and study on the impact to young children and adult heath, we should not be approving such an incomplete proposal.

Page 6 of this document stated that the preferred route A cost of construction is $9.5 million. In discussions with several real estate agents in the region, I have unanimously found all to agree that the real estate values of residences in close proximity to power lines goes down. Its hard to find potential buyers and most folks refrain from buying a house too close to high power transmission lines. There are 1000 plus residences in the area affected by this project. Even if we were to make very rough assumptions, and assume minimal cost reduction in property values and take an average loss of $100,000 per property in the current year, that goes to $100,000,000 of loss of equity to the public. This is not even accounting the businesses affected by this project. This long explanation was to raise a point that if the selection of route A was saving money to the city, this is costing a huge financial loss to the public, which is not acceptable. This decrease in property values will also directly impact the tax collection by the Santa Clara Assessor and result in lower tax revenue coming into the city of Santa Clara.

Reference #5 : Page 49 of report- Figure 5.1-2. Wall separating residences and Lafayette Street.

Personal observation#5: *The picture is taken conveniently from the other side of the railway line which is actually Kingsbury street, inside a private community and not Lafayette street. This is further away from the proposed SVP lines. This is very misleading; see snapshots taken from Google maps below*

And this is what is included on the report:

The Mission Garden Townhome community has no walls as such and the main entry to residences face the road directly and are the most impacted. There are several other single family homes on Lafayette

street with the same impact, having an entryway directly on the street. This and including other citations of reusing sections of older reports, is all in all absolutely unacceptable and instills distrust. This further shows incompetency of the agency/ agencies preparing this report.

Conclusion: *This project's initial study needs to expand beyond CEQA for approval from the public. The limited scope of CEQA has failed to address the following concerns we have:*

- *Health hazards due to EMF levels.- This is by far the gravest concern and CEQA is clearly not qualified to study that.*
- *Reduced property values- several references provided below.*
- *Loss of Aesthetic appeal for potential real estate buyers/ new and current businesses.*
- *Increase in audible noise levels during and post construction, which is already high in the area with presence of railway line and air traffic route.*
- *Increased fire hazard/ risk of other accidents.*
- *Induced current on railway lines with close proximity/ corona effect- CEQA report did not clearly address this for a 115KV line.*
- *Economic effect on the community from small to larger scale based on all of the above.*

*We demand further investigation and revisit other routes or proposals to resolve the power needs of the city. We have to ensure our and our kids' health is not at stake in the name of development and infrastructure and are not in agreement for this project to move forward**. We cannot approve this to move forward as of now given the lack of study and absence of a satisfactory solution/ mitigation provided in favor/ assurance to public health.***

Additional References:

Research on effects of EMF on humans:

1. ***https://www.ncbi.nlm.nih.gov/pmc/articles/PMC6025786/***

This research reinforces the concerns of EMF exposure effect on human health.

2. ***https://www.epa.gov/radtown/electric-and-magnetic-fields-power-lines***

This resource suggests taking precautions and keeping distance or limiting exposure. Residents would no longer have either of these two options per the current proposals if they are living there 24-7.

3. ***https://www.fastexpert.com/blog/should-i-buy-a-house-near-power-lines/***

These are points of view from a real estate expert who clearly states that property value declines proportionately to the distance of the property from high tension lines. People have apprehensions whether or not research clearly defines the risk. Potential buyers might have low priority for a property too close to a high tension power line.

4. ***https://orchard.com/blog/posts/power-lines-and-property-value***

Another research on real estate values lowered due to high tension power lines proximity.

Thank you,
Srinivas

Email: NRS-KRS 115 kV T-Line

From: Gane Sugali <ganenaik@yahoo.com>
Sent: Thursday, August 29, 2024 4:45 PM
To: NRS-KRS Project
Cc: mayorandcouncil@santaclaraca.gov; info@siliconvalleypower.com; planningcommission@santaclaraca.gov; manager@santaclaraca.gov; AJackman@santaclaraca.gov
Subject: Concerns Regarding Upcoming High Power Electric Wire Poles in Our Community for the upcoming SVP project connecting the Northern Receiving Station NRS to Kifer receiving station (KRS)- NRS-KRS 115kV Transmission Line Project

To Whomsoever it may concern,

We are residents of Santa Clara that will be negatively impacted by the "NRS-KRS 115kV Transmission Line Project". We have collectively reviewed the draft Initial Study/ Mitigated Negative declaration for "NRS-KRS 115kV Transmission Line Project" from July 2024. After reviewing this report and also attending the virtual and in person meetings, here are some references to emphasize our various concerns.

Reference #1 : CEQA's reporting includes these State reviewing agencies: California Air Resources Board (ARB), California Department of Fish and Wildlife, Bay Delta Region 3 (CDFW), California Department of Forestry and Fire Protection (CAL FIRE), California Department of Parks and Recreation, California Department of Toxic Substances Control (DTSC), California Department of Transportation, District 4 (DOT), California Department of Transportation, Division of Aeronautics (DOT), California Department of Transportation, Division of Transportation Planning (DOT), California Department of Water Resources (DWR), California Energy Commission, California Highway Patrol (CHP), California Native American Heritage Commission (NAHC), California Natural Resources Agency, California Public Utilities Commission (CPUC), California Regional Water Quality Control Board, San Francisco Bay Region 2 (RWQCB), Office of Historic Preservation, State Water Resources Control Board, Division of Drinking Water.

Personal observation#1 : *None of these agencies has any association with human health. CEQA reporting is not qualified enough to force the public to compromise on health concerns. Other agencies need to be involved to review this proposal, that are qualified to study the effect on " humans", not just wildlife and vegetation, or " environment. The checklist is completely devoid of our gravest humanitarian concerns. It is quite shocking that the project has not included any study to understand the potential impact of EMF waves on human lives, given that the transmission lines are potentially less than 60 feet from the closest dwellings. The city of Santa Clara needs to step in and have third party/ independent studies completed in favor of human health.*

Reference #2: Page 41 of report- Section 4.15. Electric and Magnetic Fields summary.

Personal observation#2 : *This consideration was completely absent earlier. Only after the residents raised their voices, this section was added. To our greatest disappointment, this section is copied over from an older report on the "South Loop Reconfiguration Project" from 2020. One would have expected that a new study would have been conducted for a project this size. The lack of due diligence and ignorance towards the specifics of this project are apparent and not acceptable. In fact we have found several sections of this older report as being reused across the entire report.*

The EMP map shared during the in person meeting had several flaws and we would like to question the viability of the study that was completed. What time of the day was the study completed and on what models were the values based on since these were done on assumption for the EMF values that would

be there once the project is complete. Since we have seen the several sections of the report redundantly copied over from other reports, we would like a more detailed analysis of this report.

Regarding EMF concerns for human health, there are plenty of scientific studies that do indicate the grave concern on human health with EMF exposures and we cannot ignore this aspect. Here is a reference to an article and there are plenty of articles listed here under references:

https://psc.wi.gov/Documents/Brochures/EMF.pdf

There are not enough references listed in the draft report provided to us, and the explanation provided seems to be conveniently using studies that prove otherwise. This needs more investigation and references. The solution provided as raising the height of the poles and increasing the distance is non-existent. It was confirmed during the in person meeting that the design will not be altered and the height was already designed as required according to the SVP team present there. It seems that the preparers of this report did not even read the report after copying pasting from the old report as evident in the list of proposed solutions is not applicable here.

The live presentation on August 22nd showed the comparison of EMF values of household objects as a means to show that everyday household items carry a similar range of mG(milli Gauss) units. This comparison was inherently flawed since it mentioned that the household devices were producing those level at 1 feet while those indicated for 115KVf lines were at 60 feet. further these household devices do not operate 24X7 similar to the transmission lines.

There were a lot of citations of reports showcasing that no clear proof of EMF to human health exists but we would like to also point out certain states like Connecticut Department of Public Health have cited reports that have shown an increased incidence of childhood leukemia(Blood cancer) at avg exposure of only 3 mG. Also they have called out that some utility workers exposed to high levels of emf have increase risks of Lur Gehrig's disease.

They also call out that most impacts of EMF from high voltage lines dissipate at ~300 feet.

These are available on Page 2 & Page 3 of this report: https://portal.ct.gov/-/media/departments-and-agencies/dph/dph/environmental_health/eoha/pdf/emffactsheet2008pdf.pdf

This report has citations from WHO , National Institute of Environmental Health Sciences and California Department of Health Services.

https://www.niehs.nih.gov/sites/default/files/health/materials/electric_and_magnetic_fields_associated_with_the_use_of_electric_power_questions_and_answers_english_508.pdf

Reference #3

Page 174- Section 5.21- Corona and induced current effect:

Personal observation#3

The railway line's proximity to the proposed high transmission lines is very concerning. The centerline distance from proposed lines to railway line is aproximately 50 feet per google maps with some margin for error. As per the report there are no Corona rings proposed for the 115KV lines. There seems to be negligence in design in consideration of the hazards posed by these high voltage lines as Corona effect can transfer current to railway lines. All the residents are at a high risk of accidental hazards given the proximity of the railway line, this project is adding on to the hazards. This section is only stating information about what Corona effect is, as may be required by law, which by the way is again a copy paste from an old report. The only concern discussed in more depth is the audible noise level. The concerns are presented to imply that this is not significant by stating that 115KV lines pose less than significant risk**.**

Reference #4: Post meeting material from March 19th 2024
@https://santaclara.legistar.com/LegislationDetail.aspx?ID=6582415&GUID=E6E14646-3CF7-4D15-BB98-F18580696012&Options=&Search=

Personal observation#4: At surface level, it looks like Option #A was selected only based on Cost perspective, without any consideration to human health, young children, property values, Corona effect, long term sustainability perspective or any other factors. While its important to understand the results of CEQA study, its extremely critical to understand the negative impact of EMF on the many young children living around the proposed transmission lines. Without extensive research and study on the impact to young children and adult heath, we should not be approving such an incomplete proposal.

Page 6 of this document stated that the preferred route A cost of construction is $9.5 million. In discussions with several real estate agents in the region, I have unanimously found all to agree that the real estate values of residences in close proximity to power lines goes down. Its hard to find potential buyers and most folks refrain from buying a house too close to high power transmission lines. There are 1000 plus residences in the area affected by this project. Even if we were to make very rough assumptions, and assume minimal cost reduction in property values and take an average loss of $100,000 per property in the current year, that goes to $100,000,000 of loss of equity to the public. This is not even accounting the businesses affected by this project. This long explanation was to raise a point that if the selection of route A was saving money to the city, this is costing a huge financial loss to the public, which is not acceptable. This decrease in property values will also directly impact the tax collection by the Santa Clara Assessor and result in lower tax revenue coming into the city of Santa Clara.

Reference #5 : Page 49 of report- Figure 5.1-2. Wall separating residences and Lafayette Street.

Personal observation#5: *The picture is taken conveniently from the other side of the railway line which is actually Kingsbury street, inside a private community and not Lafayette street. This is further away from the proposed SVP lines. This is very misleading; see snapshots taken from Google maps below*

And this is what is included on the report:

NRS-KRS 115kV Transmission Line Project 5.1. Aesthetics

Figure 5.1-2. Wall Separating Residences and Lafayette Street

Figure 5.1-2
Wall Separating Residences and Lafayette Street

July 2024 5.1-5 Administrative Draft MND/IS

The Mission Garden Townhome community has no walls as such and the main entry to residences face the road directly and are the most impacted. There are several other single family homes on Lafayette

street with the same impact, having an entryway directly on the street. This and including other citations of reusing sections of older reports, is all in all absolutely unacceptable and instills distrust. This further shows incompetency of the agency/ agencies preparing this report.

Conclusion: *This project's initial study needs to expand beyond CEQA for approval from the public. The limited scope of CEQA has failed to address the following concerns we have:*

- *Health hazards due to EMF levels.- This is by far the gravest concern and CEQA is clearly not qualified to study that.*
- *Reduced property values- several references provided below.*
- *Loss of Aesthetic appeal for potential real estate buyers/ new and current businesses.*
- *Increase in audible noise levels during and post construction, which is already high in the area with presence of railway line and air traffic route.*
- *Increased fire hazard/ risk of other accidents.*
- *Induced current on railway lines with close proximity/ corona effect- CEQA report did not clearly address this for a 115KV line.*
- *Economic effect on the community from small to larger scale based on all of the above.*

*We demand further investigation and revisit other routes or proposals to resolve the power needs of the city. We have to ensure our and our kids' health is not at stake in the name of development and infrastructure and are not in agreement for this project to move forward**. We cannot approve this to move forward as of now given the lack of study and absence of a satisfactory solution/ mitigation provided in favor/ assurance to public health.***

Additional References:

Research on effects of EMF on humans:

1. ***https://www.ncbi.nlm.nih.gov/pmc/articles/PMC6025786/***

This research reinforces the concerns of EMF exposure effect on human health.

2. ***https://www.epa.gov/radtown/electric-and-magnetic-fields-power-lines***

This resource suggests taking precautions and keeping distance or limiting exposure. Residents would no longer have either of these two options per the current proposals if they are living there 24-7.

What You Can Do

If you are concerned about possible health risks from electric and magnetic fields, you can:

- **Increase the distance between yourself and the source.** The greater the distance between you and the source of EMF, the lower your exposure.
- **Limit the time spent around the source.** The less time you spend near EMF, the lower your exposure.

3. ***https://www.fastexpert.com/blog/should-i-buy-a-house-near-power-lines/***

These are points of view from a real estate expert who clearly states that property value declines proportionately to the distance of the property from high tension lines. People have apprehensions whether or not research clearly defines the risk. Potential buyers might have low priority for a property too close to a high tension power line.

4. ***https://orchard.com/blog/posts/power-lines-and-property-value***

Another research on real estate values lowered due to high tension power lines proximity.

Thanks
Gane Sugali
1921 Silva place
Santa Clara CA

Email: NRS-KRS 115 kV T-Line

From: Adnan Hemani <adnan.h@berkeley.edu>
Sent: Thursday, August 29, 2024 4:32 PM
To: NRS-KRS Project; mayorandcouncil@santaclaraca.gov; info@siliconvalleypower.com; planningcommission@santaclaraca.gov; manager@santaclaraca.gov; AJackman@santaclaraca.gov
Subject: Concerns Regarding Upcoming High Power Electric Wire Poles in Our Community for the upcoming SVP project connecting the Northern Receiving Station NRS to Kifer receiving station (KRS)- NRS-KRS 115kV Transmission Line Project

To Whomsoever it may concern,

We are residents of Santa Clara that will be negatively impacted by the "NRS-KRS 115kV Transmission Line Project". We have collectively reviewed the draft Initial Study/ Mitigated Negative declaration for "NRS-KRS 115kV Transmission Line Project" from July 2024. After reviewing this report and also attending the virtual and in person meetings, here are some references to emphasize our various concerns.

Reference #1 : CEQA's reporting includes these State reviewing agencies: California Air Resources Board (ARB), California Department of Fish and Wildlife, Bay Delta Region 3 (CDFW), California Department of Forestry and Fire Protection (CAL FIRE), California Department of Parks and Recreation, California Department of Toxic Substances Control (DTSC), California Department of Transportation, District 4 (DOT), California Department of Transportation, Division of Aeronautics (DOT), California Department of Transportation, Division of Transportation Planning (DOT), California Department of Water Resources (DWR), California Energy Commission, California Highway Patrol (CHP), California Native American Heritage Commission (NAHC), California Natural Resources Agency, California Public Utilities Commission (CPUC), California Regional Water Quality Control Board, San Francisco Bay Region 2 (RWQCB), Office of Historic Preservation, State Water Resources Control Board, Division of Drinking Water.

Personal observation#1 : *None of these agencies has any association with human health. CEQA reporting is not qualified enough to force the public to compromise on health concerns. Other agencies need to be involved to review this proposal, that are qualified to study the effect on " humans", not just wildlife and vegetation, or " environment. The checklist is completely devoid of our gravest humanitarian concerns. It is quite shocking that the project has not included any study to understand the potential impact of EMF waves on human lives, given that the transmission lines are potentially less than 60 feet from the closest dwellings. The city of Santa Clara needs to step in and have third party/ independent studies completed in favor of human health.*

Reference #2: Page 41 of report- Section 4.15. Electric and Magnetic Fields summary.

Personal observation#2 : *This consideration was completely absent earlier. Only after the residents raised their voices, this section was added. To our greatest disappointment, this section is copied over from an older report on the "South Loop Reconfiguration Project" from 2020. One would have expected that a new study would have been conducted for a project this size. The lack of due diligence and ignorance towards the specifics of this project are apparent and not acceptable. In fact we have found several sections of this older report as being reused across the entire report.*

The EMP map shared during the in person meeting had several flaws and we would like to question the viability of the study that was completed. What time of the day was the study completed and on what models were the values based on since these were done on assumption for the EMF values that would be there once the project is complete. Since we have seen the several sections of the report redundantly copied over from other reports, we would like a more detailed analysis of this report.

Regarding EMF concerns for human health, there are plenty of scientific studies that do indicate the grave concern on human health with EMF exposures and we cannot ignore this aspect. Here is a reference to an article and there are plenty of articles listed here under references:

https://psc.wi.gov/Documents/Brochures/EMF.pdf

There are not enough references listed in the draft report provided to us, and the explanation provided seems to be conveniently using studies that prove otherwise. This needs more investigation and references. The solution provided as raising the height of the poles and increasing the distance is non-existent. It was confirmed during the in person meeting that the design will not be altered and the height was already designed as required according to the SVP team present there. It seems that the preparers of this report did not even read the report after copying pasting from the old report as evident in the list of proposed solutions is not applicable here.

The live presentation on August 22nd showed the comparison of EMF values of household objects as a means to show that everyday household items carry a similar range of mG(milli Gauss) units. This comparison was inherently flawed since it mentioned that the household devices were producing those level at 1 feet while those indicated for 115KVf lines were at 60 feet. further these household devices do not operate 24X7 similar to the transmission lines.

There were a lot of citations of reports showcasing that no clear proof of EMF to human health exists but we would like to also point out certain states like Connecticut Department of Public Health have cited reports that have shown an increased incidence of childhood leukemia(Blood cancer) at avg exposure of only 3 mG. Also they have called out that some utility workers exposed to high levels of emf have increased risks of Lou Gehrig's disease.

They also call out that most impacts of EMF from high voltage lines dissipate at ~300 feet.

These are available on Page 2 & Page 3 of this report: https://portal.ct.gov/-/media/departments-and-agencies/dph/dph/environmental_health/eoha/pdf/emffactsheet2008pdf.pdf

This report has citations from WHO , National Institute of Environmental Health Sciences and California Department of Health Services.

https://www.niehs.nih.gov/sites/default/files/health/materials/electric_and_magnetic_fields_associated_with_the_use_of_electric_power_questions_and_answers_english_508.pdf

Reference #3

Page 174- Section 5.21- Corona and induced current effect:

Personal observation#3

The railway line's proximity to the proposed high transmission lines is very concerning. The centerline distance from proposed lines to railway line is aproximately 50 feet per google maps with some margin for error. As per the report there are no Corona rings proposed for the 115KV lines. There seems to be negligence in design in consideration of the hazards posed by these high voltage lines as Corona effect can transfer current to railway lines. All the residents are at a high risk of accidental hazards given the proximity of the railway line, this project is adding on to the hazards. This section is only stating information about what Corona effect is, as may be required by law, which by the way is again a copy paste from an old report. The only concern discussed in more depth is the audible noise level. The concerns are presented to imply that this is not significant by stating that 115KV lines pose less than significant risk**.**

Reference #4: Post meeting material from March 19th 2024
@https://santaclara.legistar.com/LegislationDetail.aspx?ID=6582415&GUID=E6E14646-3CF7-4D15-BB98-F18580696012&Options=&Search=

Personal observation#4: At surface level, it looks like Option #A was selected only based on Cost perspective, without any consideration to human health, young children, property values, Corona effect, long term sustainability perspective or any other factors. While its important to understand the results of CEQA study, its extremely critical to understand the negative impact of EMF on the many young children living around the proposed transmission lines. Without extensive research and study on the impact to young children and adult heath, we should not be approving such an incomplete proposal.

Page 6 of this document stated that the preferred route A cost of construction is $9.5 million. In discussions with several real estate agents in the region, I have unanimously found all to agree that the real estate values of residences in close proximity to power lines goes down. Its hard to find potential buyers and most folks refrain from buying a house too close to high power transmission lines. There are 1000 plus residences in the area affected by this project. Even if we were to make very rough assumptions, and assume minimal cost reduction in property values and take an average loss of $100,000 per property in the current year, that goes to $100,000,000 of loss of equity to the public. This is not even accounting the businesses affected by this project. This long explanation was to raise a point that if the selection of route A was saving money to the city, this is costing a huge financial loss to the public, which is not acceptable. This decrease in property values will also directly impact the tax collection by the Santa Clara Assessor and result in lower tax revenue coming into the city of Santa Clara.

Reference #5 : Page 49 of report- Figure 5.1-2. Wall separating residences and Lafayette Street.

Personal observation#5: *The picture is taken conveniently from the other side of the railway line which is actually Kingsbury street, inside a private community and not Lafayette street. This is further away from the proposed SVP lines. This is very misleading; see snapshots taken from Google maps below*

<u>And this is what is included on the report:</u>

NRS-KRS 115kV Transmission Line Project 5.1. Aesthetics

Figure 5.1-2. Wall Separating Residences and Lafayette Street

Figure 5.1-2
Wall Separating Residences and Lafayette Street

July 2024 5.1-5 Administrative Draft MND/IS

The Mission Garden Townhome community has no walls as such and the main entry to residences face the road directly and are the most impacted. There are several other single family homes on Lafayette street with the same impact, having an entryway directly on the street. This and including other citations of reusing sections of older reports, is all in all absolutely unacceptable and instills distrust. This further shows incompetency of the agency/ agencies preparing this report.

<u>Conclusion:</u> *This project's initial study needs to expand beyond CEQA for approval from the public. The limited scope of CEQA has failed to address the following concerns we have:*

- *Health hazards due to EMF levels.- This is by far the gravest concern and CEQA is clearly not qualified to study that.*
- *Reduced property values- several references provided below.*
- *Loss of Aesthetic appeal for potential real estate buyers/ new and current businesses.*

- *Increase in audible noise levels during and post construction, which is already high in the area with presence of railway line and air traffic route.*
- *Increased fire hazard/ risk of other accidents.*
- *Induced current on railway lines with close proximity/ corona effect- CEQA report did not clearly address this for a 115KV line.*
- *Economic effect on the community from small to larger scale based on all of the above.*

*We demand further investigation and revisit other routes or proposals to resolve the power needs of the city. We have to ensure our and our kids' health is not at stake in the name of development and infrastructure and are not in agreement for this project to move forward**. We cannot approve this to move forward as of now given the lack of study and absence of a satisfactory solution/ mitigation provided in favor/ assurance to public health.***

Additional References:

Research on effects of EMF on humans:

1. https://www.ncbi.nlm.nih.gov/pmc/articles/PMC6025786/

This research reinforces the concerns of EMF exposure effect on human health.

2. https://www.epa.gov/radtown/electric-and-magnetic-fields-power-lines

This resource suggests taking precautions and keeping distance or limiting exposure. Residents would no longer have either of these two options per the current proposals if they are living there 24-7.

What You Can Do

If you are concerned about possible health risks from electric and magnetic fields, you can:

- **Increase the distance between yourself and the source.** The greater the distance between you and the source of EMF, the lower your exposure.
- **Limit the time spent around the source.** The less time you spend near EMF, the lower your exposure.

3. ***https://www.fastexpert.com/blog/should-i-buy-a-house-near-power-lines/***

These are points of view from a real estate expert who clearly states that property value declines proportionately to the distance of the property from high tension lines. People have apprehensions whether or not research clearly defines the risk. Potential buyers might have low priority for a property too close to a high tension power line.

4. https://orchard.com/blog/posts/power-lines-and-property-value

Another research on real estate values lowered due to high tension power lines proximity.

--
Thanks,
Adnan Hemani

Email: NRS-KRS 115 kV T-Line

From: Darshna Siva <darshna1993@gmail.com>
Sent: Thursday, August 29, 2024 4:19 PM
To: NRS-KRS Project; mayorandcouncil@santaclaraca.gov; info@siliconvalleypower.com; planningcommission@santaclaraca.gov; manager@santaclaraca.gov; AJackman@santaclaraca.gov
Subject: Concerns Regarding Upcoming High Power Electric Wire Poles in Our Community for the upcoming SVP project connecting the Northern Receiving Station NRS to Kifer receiving station (KRS)- NRS-KRS 115kV Transmission Line Project

To Whomsoever it may concern,

We are residents of Santa Clara that will be negatively impacted by the "NRS-KRS 115kV Transmission Line Project". We have collectively reviewed the draft Initial Study/ Mitigated Negative declaration for "NRS-KRS 115kV Transmission Line Project" from July 2024. After reviewing this report and also attending the virtual and in person meetings, here are some references to emphasize our various concerns.

Reference #1 : CEQA's reporting includes these State reviewing agencies: California Air Resources Board (ARB), California Department of Fish and Wildlife, Bay Delta Region 3 (CDFW), California Department of Forestry and Fire Protection (CAL FIRE), California Department of Parks and Recreation, California Department of Toxic Substances Control (DTSC), California Department of Transportation, District 4 (DOT), California Department of Transportation, Division of Aeronautics (DOT), California Department of Transportation, Division of Transportation Planning (DOT), California Department of Water Resources (DWR), California Energy Commission, California Highway Patrol (CHP), California Native American Heritage Commission (NAHC), California Natural Resources Agency, California Public Utilities Commission (CPUC), California Regional Water Quality Control Board, San Francisco Bay Region 2 (RWQCB), Office of Historic Preservation, State Water Resources Control Board, Division of Drinking Water.

Personal observation#1 : *None of these agencies has any association with human health. CEQA reporting is not qualified enough to force the public to compromise on health concerns. Other agencies need to be involved to review this proposal, that are qualified to study the effect on " humans", not just wildlife and vegetation, or " environment. The checklist is completely devoid of our gravest humanitarian concerns. It is quite shocking that the project has not included any study to understand the potential impact of EMF waves on human lives, given that the transmission lines are potentially less than 60 feet from the closest dwellings. The city of Santa Clara needs to step in and have third party/ independent studies completed in favor of human health.*

Reference #2: Page 41 of report- Section 4.15. Electric and Magnetic Fields summary.

Personal observation#2 : *This consideration was completely absent earlier. Only after the residents raised their voices, this section was added. To our greatest disappointment, this section is copied over from an older report on the "South Loop Reconfiguration Project" from 2020. One would have expected that a new study would have been conducted for a project this size. The lack of due diligence and ignorance towards the specifics of this project are apparent and not acceptable. In fact we have found several sections of this older report as being reused across the entire report.*

The EMP map shared during the in person meeting had several flaws and we would like to question the viability of the study that was completed. What time of the day was the study completed and on what models were the values based on since these were done on assumption for the EMF values that would be there once the project is complete. Since we have seen the several sections of the report redundantly copied over from other reports, we would like a more detailed analysis of this report.

Regarding EMF concerns for human health, there are plenty of scientific studies that do indicate the grave concern on human health with EMF exposures and we cannot ignore this aspect. Here is a reference to an article and there are plenty of articles listed here under references:

https://psc.wi.gov/Documents/Brochures/EMF.pdf

There are not enough references listed in the draft report provided to us, and the explanation provided seems to be conveniently using studies that prove otherwise. This needs more investigation and references. The solution provided as raising the height of the poles and increasing the distance is non-existent. It was confirmed during the in person meeting that the design will not be altered and the height was already designed as required according to the SVP team present there. It seems that the preparers of this report did not even read the report after copying pasting from the old report as evident in the list of proposed solutions is not applicable here.

The live presentation on August 22nd showed the comparison of EMF values of household objects as a means to show that everyday household items carry a similar range of mG(milli Gauss) units. This comparison was inherently flawed since it mentioned that the household devices were producing those level at 1 feet while those indicated for 115KVf lines were at 60 feet. further these household devices do not operate 24X7 similar to the transmission lines.

There were a lot of citations of reports showcasing that no clear proof of EMF to human health exists but we would like to also point out certain states like Connecticut Department of Public Health have cited reports that have shown an increased incidence of childhood leukemia(Blood cancer) at avg exposure of only 3 mG. Also they have called out that some utility workers exposed to high levels of emf have increase risks of Lur Gehrig's disease.

They also call out that most impacts of EMF from high voltage lines dissipate at ~300 feet.

These are available on Page 2 & Page 3 of this report: https://portal.ct.gov/-/media/departments-and-agencies/dph/dph/environmental_health/eoha/pdf/emffactsheet2008pdf.pdf

This report has citations from WHO , National Institute of Environmental Health Sciences and California Department of Health Services.

https://www.niehs.nih.gov/sites/default/files/health/materials/electric_and_magnetic_fields_associated_with_the_use_of_electric_power_questions_and_answers_english_508.pdf

Reference #3

Page 174- Section 5.21- Corona and induced current effect:

Personal observation#3

The railway line's proximity to the proposed high transmission lines is very concerning. The centerline distance from proposed lines to railway line is aproximately 50 feet per google maps with some margin for error. As per the report there are no Corona rings proposed for the 115KV lines. There seems to be negligence in design in consideration of the hazards posed by these high voltage lines as Corona effect can transfer current to railway lines. All the residents are at a high risk of accidental hazards given the proximity of the railway line, this project is adding on to the hazards. This section is only stating information about what Corona effect is, as may be required by law, which by the way is again a copy paste from an old report. The only concern discussed in more depth is the audible noise level. The concerns are presented to imply that this is not significant by stating that 115KV lines pose less than significant risk**.**

Reference #4: Post meeting material from March 19th 2024
@https://santaclara.legistar.com/LegislationDetail.aspx?ID=6582415&GUID=E6E14646-3CF7-4D15-BB98-F18580696012&Options=&Search=

Personal observation#4: At surface level, it looks like Option #A was selected only based on Cost perspective, without any consideration to human health, young children, property values, Corona effect, long term sustainability perspective or any other factors. While its important to understand the results of CEQA study, its extremely critical to understand the negative impact of EMF on the many young children living around the proposed transmission lines. Without extensive research and study on the impact to young children and adult heath, we should not be approving such an incomplete proposal.

Page 6 of this document stated that the preferred route A cost of construction is $9.5 million. In discussions with several real estate agents in the region, I have unanimously found all to agree that the real estate values of residences in close proximity to power lines goes down. Its hard to find potential buyers and most folks refrain from buying a house too close to high power transmission lines. There are 1000 plus residences in the area affected by this project. Even if we were to make very rough assumptions, and assume minimal cost reduction in property values and take an average loss of $100,000 per property in the current year, that goes to $100,000,000 of loss of equity to the public. This is not even accounting the businesses affected by this project. This long explanation was to raise a point that if the selection of route A was saving money to the city, this is costing a huge financial loss to the public, which is not acceptable. This decrease in property values will also directly impact the tax collection by the Santa Clara Assessor and result in lower tax revenue coming into the city of Santa Clara.

Reference #5 : Page 49 of report- Figure 5.1-2. Wall separating residences and Lafayette Street.

Personal observation#5: *The picture is taken conveniently from the other side of the railway line which is actually Kingsbury street, inside a private community and not Lafayette street. This is further away from the proposed SVP lines. This is very misleading; see snapshots taken from Google maps below*

<u>And this is what is included on the report:</u>

NRS-KRS 115kV Transmission Line Project 5.1. Aesthetics

Figure 5.1-2. Wall Separating Residences and Lafayette Street

Figure 5.1-2
Wall Separating Residences and Lafayette Street

July 2024 5.1-5 Administrative Draft MND/IS

The Mission Garden Townhome community has no walls as such and the main entry to residences face the road directly and are the most impacted. There are several other single family homes on Lafayette street with the same impact, having an entryway directly on the street. This and including other citations of reusing sections of older reports, is all in all absolutely unacceptable and instills distrust. This further shows incompetency of the agency/ agencies preparing this report.

<u>Conclusion:</u> *This project's initial study needs to expand beyond CEQA for approval from the public. The limited scope of CEQA has failed to address the following concerns we have:*

- *Health hazards due to EMF levels.- This is by far the gravest concern and CEQA is clearly not qualified to study that.*

- *Reduced property values- several references provided below.*
- *Loss of Aesthetic appeal for potential real estate buyers/ new and current businesses.*
- *Increase in audible noise levels during and post construction, which is already high in the area with presence of railway line and air traffic route.*
- *Increased fire hazard/ risk of other accidents.*
- *Induced current on railway lines with close proximity/ corona effect- CEQA report did not clearly address this for a 115KV line.*
- *Economic effect on the community from small to larger scale based on all of the above.*

*We demand further investigation and revisit other routes or proposals to resolve the power needs of the city. We have to ensure our and our kids' health is not at stake in the name of development and infrastructure and are not in agreement for this project to move forward**. We cannot approve this to move forward as of now given the lack of study and absence of a satisfactory solution/ mitigation provided in favor/ assurance to public health.***

Additional References:

Research on effects of EMF on humans:

1. ***https://www.ncbi.nlm.nih.gov/pmc/articles/PMC6025786/***

This research reinforces the concerns of EMF exposure effect on human health.

2. ***https://www.epa.gov/radtown/electric-and-magnetic-fields-power-lines***

This resource suggests taking precautions and keeping distance or limiting exposure. Residents would no longer have either of these two options per the current proposals if they are living there 24-7.

What You Can Do

If you are concerned about possible health risks from electric and magnetic fields, you can:

- **Increase the distance between yourself and the source.** The greater the distance between you and the source of EMF, the lower your exposure.
- **Limit the time spent around the source.** The less time you spend near EMF, the lower your exposure.

3. ***https://www.fastexpert.com/blog/should-i-buy-a-house-near-power-lines/***

These are points of view from a real estate expert who clearly states that property value declines proportionately to the distance of the property from high tension lines. People have apprehensions whether or not research clearly defines the risk. Potential buyers might have low priority for a property too close to a high tension power line.

4. ***https://orchard.com/blog/posts/power-lines-and-property-value***

Another research on real estate values lowered due to high tension power lines proximity.

Email: NRS-KRS 115 kV T-Line

From: vinay iyer <iyer.vinay008@gmail.com>
Sent: Thursday, August 29, 2024 4:17 PM
To: NRS-KRS Project; mayorandcouncil@santaclaraca.gov; info@siliconvalleypower.com; planningcommission@santaclaraca.gov; manager@santaclaraca.gov; AJackman@santaclaraca.gov
Subject: Concerns Regarding Upcoming High Power Electric Wire Poles in Our Community for the upcoming SVP project connecting the Northern Receiving Station NRS to Kifer receiving station (KRS)- NRS-KRS 115kV Transmission Line Project

To Whomsoever it may concern,

We are residents of Santa Clara that will be negatively impacted by the "NRS-KRS 115kV Transmission Line Project". We have collectively reviewed the draft Initial Study/ Mitigated Negative declaration for "NRS-KRS 115kV Transmission Line Project" from July 2024. After reviewing this report and also attending the virtual and in person meetings, here are some references to emphasize our various concerns.

Reference #1 : CEQA's reporting includes these State reviewing agencies: California Air Resources Board (ARB), California Department of Fish and Wildlife, Bay Delta Region 3 (CDFW), California Department of Forestry and Fire Protection (CAL FIRE), California Department of Parks and Recreation, California Department of Toxic Substances Control (DTSC), California Department of Transportation, District 4 (DOT), California Department of Transportation, Division of Aeronautics (DOT), California Department of Transportation, Division of Transportation Planning (DOT), California Department of Water Resources (DWR), California Energy Commission, California Highway Patrol (CHP), California Native American Heritage Commission (NAHC), California Natural Resources Agency, California Public Utilities Commission (CPUC), California Regional Water Quality Control Board, San Francisco Bay Region 2 (RWQCB), Office of Historic Preservation, State Water Resources Control Board, Division of Drinking Water.

Personal observation#1 : *None of these agencies has any association with human health. CEQA reporting is not qualified enough to force the public to compromise on health concerns. Other agencies need to be involved to review this proposal, that are qualified to study the effect on " humans", not just wildlife and vegetation, or " environment. The checklist is completely devoid of our gravest humanitarian concerns. It is quite shocking that the project has not included any study to understand the potential impact of EMF waves on human lives, given that the transmission lines are potentially less than 60 feet from the closest dwellings. The city of Santa Clara needs to step in and have third party/ independent studies completed in favor of human health.*

Reference #2: Page 41 of report- Section 4.15. Electric and Magnetic Fields summary.

Personal observation#2 : *This consideration was completely absent earlier. Only after the residents raised their voices, this section was added. To our greatest disappointment, this section is copied over from an older report on the "South Loop Reconfiguration Project" from 2020. One would have expected that a new study would have been conducted for a project this size. The lack of due diligence and ignorance towards the specifics of this project are apparent and not acceptable. In fact we have found several sections of this older report as being reused across the entire report.*

The EMP map shared during the in person meeting had several flaws and we would like to question the viability of the study that was completed. What time of the day was the study completed and on what models were the values based on since these were done on assumption for the EMF values that would be there once the project is complete. Since we have seen the several sections of the report redundantly copied over from other reports, we would like a more detailed analysis of this report.

Regarding EMF concerns for human health, there are plenty of scientific studies that do indicate the grave concern on human health with EMF exposures and we cannot ignore this aspect. Here is a reference to an article and there are plenty of articles listed here under references:

https://psc.wi.gov/Documents/Brochures/EMF.pdf

There are not enough references listed in the draft report provided to us, and the explanation provided seems to be conveniently using studies that prove otherwise. This needs more investigation and references. The solution provided as raising the height of the poles and increasing the distance is non-existent. It was confirmed during the in person meeting that the design will not be altered and the height was already designed as required according to the SVP team present there. It seems that the preparers of this report did not even read the report after copying pasting from the old report as evident in the list of proposed solutions is not applicable here.

The live presentation on August 22nd showed the comparison of EMF values of household objects as a means to show that everyday household items carry a similar range of mG(milli Gauss) units. This comparison was inherently flawed since it mentioned that the household devices were producing those level at 1 feet while those indicated for 115KVf lines were at 60 feet. further these household devices do not operate 24X7 similar to the transmission lines.

There were a lot of citations of reports showcasing that no clear proof of EMF to human health exists but we would like to also point out certain states like Connecticut Department of Public Health have cited reports that have shown an increased incidence of childhood leukemia(Blood cancer) at avg exposure of only 3 mG. Also they have called out that some utility workers exposed to high levels of emf have increase risks of Lur Gehrig's disease.

They also call out that most impacts of EMF from high voltage lines dissipate at ~300 feet.

These are available on Page 2 & Page 3 of this report: https://portal.ct.gov/-/media/departments-and-agencies/dph/dph/environmental_health/eoha/pdf/emffactsheet2008pdf.pdf

This report has citations from WHO , National Institute of Environmental Health Sciences and California Department of Health Services.

https://www.niehs.nih.gov/sites/default/files/health/materials/electric_and_magnetic_fields_associated_with_the_use_of_electric_power_questions_and_answers_english_508.pdf

Reference #3

Page 174- Section 5.21- Corona and induced current effect:

Personal observation#3

The railway line's proximity to the proposed high transmission lines is very concerning. The centerline distance from proposed lines to railway line is aproximately 50 feet per google maps with some margin for error. As per the report there are no Corona rings proposed for the 115KV lines. There seems to be negligence in design in consideration of the hazards posed by these high voltage lines as Corona effect can transfer current to railway lines. All the residents are at a high risk of accidental hazards given the proximity of the railway line, this project is adding on to the hazards. This section is only stating information about what Corona effect is, as may be required by law, which by the way is again a copy paste from an old report. The only concern discussed in more depth is the audible noise level. The concerns are presented to imply that this is not significant by stating that 115KV lines pose less than significant risk**.**

Reference #4: Post meeting material from March 19th 2024
@https://santaclara.legistar.com/LegislationDetail.aspx?ID=6582415&GUID=E6E14646-3CF7-4D15-BB98-F18580696012&Options=&Search=

Personal observation#4: At surface level, it looks like Option #A was selected only based on Cost perspective, without any consideration to human health, young children, property values, Corona effect, long term sustainability perspective or any other factors. While its important to understand the results of CEQA study, its extremely critical to understand the negative impact of EMF on the many young children living around the proposed transmission lines. Without extensive research and study on the impact to young children and adult heath, we should not be approving such an incomplete proposal.

Page 6 of this document stated that the preferred route A cost of construction is $9.5 million. In discussions with several real estate agents in the region, I have unanimously found all to agree that the real estate values of residences in close proximity to power lines goes down. Its hard to find potential buyers and most folks refrain from buying a house too close to high power transmission lines. There are 1000 plus residences in the area affected by this project. Even if we were to make very rough assumptions, and assume minimal cost reduction in property values and take an average loss of $100,000 per property in the current year, that goes to $100,000,000 of loss of equity to the public. This is not even accounting the businesses affected by this project. This long explanation was to raise a point that if the selection of route A was saving money to the city, this is costing a huge financial loss to the public, which is not acceptable. This decrease in property values will also directly impact the tax collection by the Santa Clara Assessor and result in lower tax revenue coming into the city of Santa Clara.

Reference #5 : Page 49 of report- Figure 5.1-2. Wall separating residences and Lafayette Street.

Personal observation#5: *The picture is taken conveniently from the other side of the railway line which is actually Kingsbury street, inside a private community and not Lafayette street. This is further away from the proposed SVP lines. This is very misleading; see snapshots taken from Google maps below*

<u>And this is what is included on the report:</u>

The Mission Garden Townhome community has no walls as such and the main entry to residences face the road directly and are the most impacted. There are several other single family homes on Lafayette street with the same impact, having an entryway directly on the street. This and including other citations of reusing sections of older reports, is all in all absolutely unacceptable and instills distrust. This further shows incompetency of the agency/ agencies preparing this report.

<u>Conclusion:</u> *This project's initial study needs to expand beyond CEQA for approval from the public. The limited scope of CEQA has failed to address the following concerns we have:*

- *Health hazards due to EMF levels.- This is by far the gravest concern and CEQA is clearly not qualified to study that.*
- *Reduced property values- several references provided below.*

- *Loss of Aesthetic appeal for potential real estate buyers/ new and current businesses.*
- *Increase in audible noise levels during and post construction, which is already high in the area with presence of railway line and air traffic route.*
- *Increased fire hazard/ risk of other accidents.*
- *Induced current on railway lines with close proximity/ corona effect- CEQA report did not clearly address this for a 115KV line.*
- *Economic effect on the community from small to larger scale based on all of the above.*

*We demand further investigation and revisit other routes or proposals to resolve the power needs of the city. We have to ensure our and our kids' health is not at stake in the name of development and infrastructure and are not in agreement for this project to move forward**. We cannot approve this to move forward as of now given the lack of study and absence of a satisfactory solution/ mitigation provided in favor/ assurance to public health.***

Additional References:

Research on effects of EMF on humans:

1. ***https://www.ncbi.nlm.nih.gov/pmc/articles/PMC6025786/***

This research reinforces the concerns of EMF exposure effect on human health.

2. ***https://www.epa.gov/radtown/electric-and-magnetic-fields-power-lines***

This resource suggests taking precautions and keeping distance or limiting exposure. Residents would no longer have either of these two options per the current proposals if they are living there 24-7.

What You Can Do

If you are concerned about possible health risks from electric and magnetic fields, you can:

- **Increase the distance between yourself and the source.** The greater the distance between you and the source of EMF, the lower your exposure.
- **Limit the time spent around the source.** The less time you spend near EMF, the lower your exposure.

3. ***https://www.fastexpert.com/blog/should-i-buy-a-house-near-power-lines/***

These are points of view from a real estate expert who clearly states that property value declines proportionately to the distance of the property from high tension lines. People have apprehensions whether or not research clearly defines the risk. Potential buyers might have low priority for a property too close to a high tension power line.

4. ***https://orchard.com/blog/posts/power-lines-and-property-value***

Another research on real estate values lowered due to high tension power lines proximity.

--
Regards,
Vinay Iyer

Email: NRS-KRS 115 kV T-Line

From: Preetika <preetikaloomba1@yahoo.com>
Sent: Wednesday, August 28, 2024 11:37 AM
To: Allie Jackman <AJackman@santaclaraca.gov>
Cc: NRS-KRS@aspeneg.com; Mayor and Council <MAYORANDCOUNCIL@SantaClaraCA.gov>; DL SVP Info Group <info@svpower.com>; PlanningCommission <PLANNINGCOMMISSION@santaclaraca.gov>; Manager <Manager@santaclaraca.gov>
Subject: NRS-KRS 115kV Transmission Line Project- Comments

You don't often get email from preetikaloomba1@yahoo.com. Learn why this is important
Subject: **Concerns Regarding Upcoming High Power Electric Wire Poles in Our Community for the upcoming SVP project connecting the Northern Receiving Station NRS to Kifer receiving station (KRS)- *NRS-KRS 115kV Transmission Line Project***

To Whomsoever it may concern,

We are residents of Santa Clara that will be negatively impacted by the "NRS-KRS 115kV Transmission Line Project". We have collectively reviewed the draft Initial Study/ Mitigated Negative declaration for "NRS-KRS 115kV Transmission Line Project" from July 2024. After reviewing this report and also attending the virtual and in person meetings, here are some references to emphasize our various concerns.

Reference #1 : CEQA's reporting includes these State reviewing agencies: California Air Resources Board (ARB), California Department of Fish and Wildlife, Bay Delta Region 3 (CDFW), California Department of Forestry and Fire Protection (CAL FIRE), California Department of Parks and Recreation, California Department of Toxic Substances Control (DTSC), California Department of Transportation, District 4 (DOT), California Department of Transportation, Division of Aeronautics (DOT), California Department of Transportation, Division of Transportation Planning (DOT), California Department of Water Resources (DWR), California Energy Commission, California Highway Patrol (CHP), California Native American Heritage Commission (NAHC), California Natural Resources Agency, California Public Utilities Commission (CPUC), California Regional Water Quality Control Board, San Francisco Bay Region 2 (RWQCB), Office of Historic Preservation, State Water Resources Control Board, Division of Drinking Water.

Personal observation#1 : *None of these agencies has any association with human health. CEQA reporting is not qualified enough to force the public to compromise on health concerns. Other agencies need to be involved to review this proposal, that are qualified to study the effect on " humans", not just wildlife and vegetation, or " environment. The checklist is completely devoid of our gravest humanitarian concerns. It is quite shocking that the project has not included any study to understand the potential impact of EMF waves on human lives, given that the transmission lines are potentially less than 60 feet from the closest dwellings. The city of Santa Clara needs to step in and have third party/ independent studies completed in favor of human health.*

Reference #2: Page 41 of report- Section 4.15. Electric and Magnetic Fields summary.

Personal observation#2 : *This consideration was completely absent earlier. Only after the residents raised their voices, this section was added. To our greatest disappointment, this section is copied over from an older report on the "South Loop Reconfiguration Project" from 2020. One would have expected that a new study would have been conducted for a project this size. The lack of due diligence and*

ignorance towards the specifics of this project are apparent and not acceptable. In fact we have found several sections of this older report as being reused across the entire report.

The EMP map shared during the in person meeting had several flaws and we would like to question the viability of the study that was completed. What time of the day was the study completed and on what models were the values based on since these were done on assumption for the EMF values that would be there once the project is complete. Since we have seen the several sections of the report redundantly copied over from other reports, we would like a more detailed analysis of this report.

Regarding EMF concerns for human health, there are plenty of scientific studies that do indicate the grave concern on human health with EMF exposures and we cannot ignore this aspect. Here is a reference to an article and there are plenty of articles listed here under references:

https://psc.wi.gov/Documents/Brochures/EMF.pdf

There are not enough references listed in the draft report provided to us, and the explanation provided seems to be conveniently using studies that prove otherwise. This needs more investigation and references. The solution provided as raising the height of the poles and increasing the distance is non-existent. It was confirmed during the in person meeting that the design will not be altered and the height was already designed as required according to the SVP team present there. It seems that the preparers of this report did not even read the report after copying pasting from the old report as evident in the list of proposed solutions is not applicable here.

The live presentation on August 22nd showed the comparison of EMF values of household objects as a means to show that everyday household items carry a similar range of mG(milli Gauss) units. This comparison was inherently flawed since it mentioned that the household devices were producing those level at 1 feet while those indicated for 115KVf lines were at 60 feet. further these household devices do not operate 24X7 similar to the transmission lines.

There were a lot of citations of reports showcasing that no clear proof of EMF to human health exists but we would like to also point out certain states like Connecticut Department of Public Health have cited reports that have shown an increased incidence of childhood leukemia(Blood cancer) at avg exposure of only 3 mG. Also they have called out that some utility workers exposed to high levels of emf have increase risks of Lur Gehrig's disease.

They also call out that most impacts of EMF from high voltage lines dissipate at ~300 feet.

These are available on Page 2 & Page 3 of this report: https://portal.ct.gov/-/media/departments-and-agencies/dph/dph/environmental_health/eoha/pdf/emffactsheet2008pdf.pdf

This report has citations from WHO , National Institute of Environmental Health Sciences and California Department of Health Services.

https://www.niehs.nih.gov/sites/default/files/health/materials/electric_and_magnetic_fields_associated_with_the_use_of_electric_power_questions_and_answers_english_508.pdf

Reference #3

Page 174- Section 5.21- Corona and induced current effect:

Personal observation#3

The railway line's proximity to the proposed high transmission lines is very concerning. The centerline distance from proposed lines to railway line is aproximately 50 feet per google maps with some margin for error. As per the report there are no Corona rings proposed for the 115KV lines. There seems to be negligence in design in consideration of the hazards posed by these high voltage lines as Corona effect can transfer current to railway lines. All the residents are at a high risk of accidental hazards given the proximity of the railway line, this project is adding on to the hazards. This section is only stating information about what Corona effect is, as may be required by law, which by the way is again a copy paste from an old report. The only concern discussed in more depth is the audible noise level. The concerns are presented to imply that this is not significant by stating that 115KV lines pose less than significant risk**.**

Reference #4: Post meeting material from March 19th 2024
@https://santaclara.legistar.com/LegislationDetail.aspx?ID=6582415&GUID=E6E14646-3CF7-4D15-BB98-F18580696012&Options=&Search=

Personal observation#4: At surface level, it looks like Option #A was selected only based on Cost perspective, without any consideration to human health, young children, property values, Corona effect, long term sustainability perspective or any other factors. While its important to understand the results of CEQA study, its extremely critical to understand the negative impact of EMF on the many young children living around the proposed transmission lines. Without extensive research and study on the impact to young children and adult heath, we should not be approving such an incomplete proposal.

Page 6 of this document stated that the preferred route A cost of construction is $9.5 million. In discussions with several real estate agents in the region, I have unanimously found all to agree that the real estate values of residences in close proximity to power lines goes down. Its hard to find potential buyers and most folks refrain from buying a house too close to high power transmission lines. There are 1000 plus residences in the area affected by this project. Even if we were to make very rough assumptions, and assume minimal cost reduction in property values and take an average loss of $100,000 per property in the current year, that goes to $100,000,000 of loss of equity to the public. This is not even accounting the businesses affected by this project. This long explanation was to raise a point that if the selection of route A was saving money to the city, this is costing a huge financial loss to the public, which is not acceptable. This decrease in property values will also directly impact the tax collection by the Santa Clara Assessor and result in lower tax revenue coming into the city of Santa Clara.

Reference #5 : Page 49 of report- Figure 5.1-2. Wall separating residences and Lafayette Street.

Personal observation#5: *The picture is taken conveniently from the other side of the railway line which is actually Kingsbury street, inside a private community and not Lafayette street. This is further away from the proposed SVP lines. This is very misleading; see snapshots taken from Google maps below*

<u>And this is what is included on the report:</u>

Figure 5.1-2. Wall Separating Residences and Lafayette Street

Figure 5.1-2
Wall Separating Residences and Lafayette Street

The Mission Garden Townhome community has no walls as such and the main entry to residences face the road directly and are the most impacted. There are several other single family homes on Lafayette street with the same impact, having an entryway directly on the street. This and including other citations of reusing sections of older reports, is all in all absolutely unacceptable and instills distrust. This further shows incompetency of the agency/ agencies preparing this report.

Conclusion: *This project's initial study needs to expand beyond CEQA for approval from the public. The limited scope of CEQA has failed to address the following concerns we have:*

- *Health hazards due to EMF levels.- This is by far the gravest concern and CEQA is clearly not qualified to study that.*
- *Reduced property values- several references provided below.*
- *Loss of Aesthetic appeal for potential real estate buyers/ new and current businesses.*
- *Increase in audible noise levels during and post construction, which is already high in the area with presence of railway line and air traffic route.*
- *Increased fire hazard/ risk of other accidents.*
- *Induced current on railway lines with close proximity/ corona effect- CEQA report did not clearly address this for a 115KV line.*
- *Economic effect on the community from small to larger scale based on all of the above.*

We demand further investigation and revisit other routes or proposals to resolve the power needs of the city. We have to ensure our and our kids' health is not at stake in the name of development and infrastructure and are not in agreement for this project to move forward. ***We cannot approve this to move forward as of now given the lack of study and absence of a satisfactory solution/ mitigation provided in favor/ assurance to public health.***

Additional References:

Research on effects of EMF on humans:

1. ***https://www.ncbi.nlm.nih.gov/pmc/articles/PMC6025786/***

This research reinforces the concerns of EMF exposure effect on human health.

2. https://www.epa.gov/radtown/electric-and-magnetic-fields-power-lines

This resource suggests taking precautions and keeping distance or limiting exposure. Residents would no longer have either of these two options per the current proposals if they are living there 24-7.

What You Can Do

If you are concerned about possible health risks from electric and magnetic fields, you can:

- **Increase the distance between yourself and the source.** The greater the distance between you and the source of EMF, the lower your exposure.
- **Limit the time spent around the source.** The less time you spend near EMF, the lower your exposure.

3. ***https://www.fastexpert.com/blog/should-i-buy-a-house-near-power-lines/***

These are points of view from a real estate expert who clearly states that property value declines proportionately to the distance of the property from high tension lines. People have apprehensions whether or not research clearly defines the risk. Potential buyers might have low priority for a property too close to a high tension power line.

4. https://orchard.com/blog/posts/power-lines-and-property-value

Another research on real estate values lowered due to high tension power lines proximity.

Thanks for your time and urgent attention on the matter

Preetika Tiwari
Resident of 4489 Lafayette st, Santa Clara

Email: NRS-KRS 115 kV T-Line

From: kanupriya kabra <kanu449@gmail.com>
Sent: Wednesday, August 28, 2024 11:48 AM
To: NRS-KRS Project; mayorandcouncil@santaclaraca.gov; info@siliconvalleypower.com; planningcommission@santaclaraca.gov; manager@santaclaraca.gov; AJackman@santaclaraca.gov
Subject: Concerns Regarding Upcoming High Power Electric Wire Poles in Our Community for the upcoming SVP project connecting the Northern Receiving Station NRS to Kifer receiving station (KRS)- NRS-KRS 115kV Transmission Line Project

To Whomsoever it may concern,
We are residents of Santa Clara that will be negatively impacted by the "NRS-KRS 115kV Transmission Line Project". We have collectively reviewed the draft Initial Study/ Mitigated Negative declaration for "NRS-KRS 115kV Transmission Line Project" from July 2024. After reviewing this report and also attending the virtual and in person meetings, here are some references to emphasize our various concerns.

Reference #1 : CEQA's reporting includes these State reviewing agencies: California Air Resources Board (ARB), California Department of Fish and Wildlife, Bay Delta Region 3 (CDFW), California Department of Forestry and Fire Protection (CAL FIRE), California Department of Parks and Recreation, California Department of Toxic Substances Control (DTSC), California Department of Transportation, District 4 (DOT), California Department of Transportation, Division of Aeronautics (DOT), California Department of Transportation, Division of Transportation Planning (DOT), California Department of Water Resources (DWR), California Energy Commission, California Highway Patrol (CHP), California Native American Heritage Commission (NAHC), California Natural Resources Agency, California Public Utilities Commission (CPUC), California Regional Water Quality Control Board, San Francisco Bay Region 2 (RWQCB), Office of Historic Preservation, State Water Resources Control Board, Division of Drinking Water.

Personal observation#1 : *None of these agencies has any association with human health. CEQA reporting is not qualified enough to force the public to compromise on health concerns. Other agencies need to be involved to review this proposal, that are qualified to study the effect on " humans", not just wildlife and vegetation, or " environment. The checklist is completely devoid of our gravest humanitarian concerns. It is quite shocking that the project has not included any study to understand the potential impact of EMF waves on human lives, given that the transmission lines are potentially less than 60 feet from the closest dwellings. The city of Santa Clara needs to step in and have third party/ independent studies completed in favor of human health.*

Reference #2: Page 41 of report- Section 4.15. Electric and Magnetic Fields summary.

Personal observation#2 : *This consideration was completely absent earlier. Only after the residents raised their voices, this section was added. To our greatest disappointment, this section is copied over from an older report on the "South Loop Reconfiguration Project" from 2020. One would have expected that a new study would have been conducted for a project this size. The lack of due diligence and ignorance towards the specifics of this project are apparent and not acceptable. In fact we have found several sections of this older report as being reused across the entire report.*

The EMP map shared during the in person meeting had several flaws and we would like to question the viability of the study that was completed. What time of the day was the study completed and on what models were the values based on since these were done on assumption for the EMF values that would be there once the project is complete. Since we have seen the several sections of the report redundantly copied over from other reports, we would like a more detailed analysis of this report.

Regarding EMF concerns for human health, there are plenty of scientific studies that do indicate the grave concern on human health with EMF exposures and we cannot ignore this aspect. Here is a reference to an article and there are plenty of articles listed here under references:

https://psc.wi.gov/Documents/Brochures/EMF.pdf

There are not enough references listed in the draft report provided to us, and the explanation provided seems to be conveniently using studies that prove otherwise. This needs more investigation and references. The solution provided as raising the height of the poles and increasing the distance is non-existent. It was confirmed during the in person meeting that the design will not be altered and the height was already designed as required according to the SVP team present there. It seems that the preparers of this report did not even read the report after copying pasting from the old report as evident in the list of proposed solutions is not applicable here.

The live presentation on August 22nd showed the comparison of EMF values of household objects as a means to show that everyday household items carry a similar range of mG(milli Gauss) units. This comparison was inherently flawed since it mentioned that the household devices were producing those level at 1 feet while those indicated for 115KVf lines were at 60 feet. further these household devices do not operate 24X7 similar to the transmission lines.

There were a lot of citations of reports showcasing that no clear proof of EMF to human health exists but we would like to also point out certain states like Connecticut Department of Public Health have cited reports that have shown an increased incidence of childhood leukemia(Blood cancer) at avg exposure of only 3 mG. Also they have called out that some utility workers exposed to high levels of emf have increase risks of Lur Gehrig's disease.

They also call out that most impacts of EMF from high voltage lines dissipate at ~300 feet.

These are available on Page 2 & Page 3 of this report: https://portal.ct.gov/-/media/departments-and-agencies/dph/dph/environmental_health/eoha/pdf/emffactsheet2008pdf.pdf

This report has citations from WHO , National Institute of Environmental Health Sciences and California Department of Health Services.

https://www.niehs.nih.gov/sites/default/files/health/materials/electric_and_magnetic_fields_associated_with_the_use_of_electric_power_questions_and_answers_english_508.pdf

Reference #3

Page 174- Section 5.21- Corona and induced current effect:

Personal observation#3

The railway line's proximity to the proposed high transmission lines is very concerning. The centerline distance from proposed lines to railway line is aproximately 50 feet per google maps with some margin for error. As per the report there are no Corona rings proposed for the 115KV lines. There seems to be negligence in design in consideration of the hazards posed by these high voltage lines as Corona effect can transfer current to railway lines. All the residents are at a high risk of accidental hazards given the proximity of the railway line, this project is adding on to the hazards. This section is only stating information about what Corona effect is, as may be required by law, which by the way is again a copy paste from an old report. The only concern discussed in more depth is the audible noise level. The concerns are presented to imply that this is not significant by stating that 115KV lines pose less than significant risk**.**

Reference #4: Post meeting material from March 19th 2024
@https://santaclara.legistar.com/LegislationDetail.aspx?ID=6582415&GUID=E6E14646-3CF7-4D15-BB98-F18580696012&Options=&Search=

Personal observation#4: At surface level, it looks like Option #A was selected only based on Cost perspective, without any consideration to human health, young children, property values, Corona effect, long term sustainability perspective or any other factors. While its important to understand the results of CEQA study, its extremely critical to understand the negative impact of EMF on the many young children living around the proposed transmission lines. Without extensive research and study on the impact to young children and adult heath, we should not be approving such an incomplete proposal.

Page 6 of this document stated that the preferred route A cost of construction is $9.5 million. In discussions with several real estate agents in the region, I have unanimously found all to agree that the real estate values of residences in close proximity to power lines goes down. Its hard to find potential buyers and most folks refrain from buying a house too close to high power transmission lines. There are 1000 plus residences in the area affected by this project. Even if we were to make very rough assumptions, and assume minimal cost reduction in property values and take an average loss of $100,000 per property in the current year, that goes to $100,000,000 of loss of equity to the public. This is not even accounting the businesses affected by this project. This long explanation was to raise a point that if the selection of route A was saving money to the city, this is costing a huge financial loss to the public, which is not acceptable. This decrease in property values will also directly impact the tax collection by the Santa Clara Assessor and result in lower tax revenue coming into the city of Santa Clara.

Reference #5 : Page 49 of report- Figure 5.1-2. Wall separating residences and Lafayette Street.

Personal observation#5: *The picture is taken conveniently from the other side of the railway line which is actually Kingsbury street, inside a private community and not Lafayette street. This is further away from the proposed SVP lines. This is very misleading; see snapshots taken from Google maps below*

And this is what is included on the report:

NRS-KRS 115kV Transmission Line Project 5.1. Aesthetics

Figure 5.1-2. Wall Separating Residences and Lafayette Street

Figure 5.1-2
Wall Separating Residences and Lafayette Street

July 2024 5.1-5 Administrative Draft MND/IS

The Mission Garden Townhome community has no walls as such and the main entry to residences face the road directly and are the most impacted. There are several other single family homes on Lafayette street with the same impact, having an entryway directly on the street. This and including other citations of reusing sections of older reports, is all in all absolutely unacceptable and instills distrust. This further shows incompetency of the agency/ agencies preparing this report.

Conclusion: *This project's initial study needs to expand beyond CEQA for approval from the public. The limited scope of CEQA has failed to address the following concerns we have:*

- *Health hazards due to EMF levels.- This is by far the gravest concern and CEQA is clearly not qualified to study that.*
- *Reduced property values- several references provided below.*
- *Loss of Aesthetic appeal for potential real estate buyers/ new and current businesses.*
- *Increase in audible noise levels during and post construction, which is already high in the area with presence of railway line and air traffic route.*
- *Increased fire hazard/ risk of other accidents.*
- *Induced current on railway lines with close proximity/ corona effect- CEQA report did not clearly address this for a 115KV line.*
- *Economic effect on the community from small to larger scale based on all of the above.*

*We demand further investigation and revisit other routes or proposals to resolve the power needs of the city. We have to ensure our and our kids' health is not at stake in the name of development and infrastructure and are not in agreement for this project to move forward**. We cannot approve this to move forward as of now given the lack of study and absence of a satisfactory solution/ mitigation provided in favor/ assurance to public health.***

Thanks & Regards,
Kanupriya

Additional References:

Research on effects of EMF on humans:

1. ***https://www.ncbi.nlm.nih.gov/pmc/articles/PMC6025786/***

This research reinforces the concerns of EMF exposure effect on human health.

2. ***https://www.epa.gov/radtown/electric-and-magnetic-fields-power-lines***

This resource suggests taking precautions and keeping distance or limiting exposure. Residents would no longer have either of these two options per the current proposals if they are living there 24-7.

What You Can Do

If you are concerned about possible health risks from electric and magnetic fields, you can:

- **Increase the distance between yourself and the source.** The greater the distance between you and the source of EMF, the lower your exposure.
- **Limit the time spent around the source.** The less time you spend near EMF, the lower your exposure.

3. ***https://www.fastexpert.com/blog/should-i-buy-a-house-near-power-lines/***

These are points of view from a real estate expert who clearly states that property value declines proportionately to the distance of the property from high tension lines. People have apprehensions whether or not research clearly defines the risk. Potential buyers might have low priority for a property too close to a high tension power line.

4. ***https://orchard.com/blog/posts/power-lines-and-property-value***

Another research on real estate values lowered due to high tension power lines proximity.

Email: NRS-KRS 115 kV T-Line

From: Ruchika Sarna <ruchikasarna@gmail.com>
Sent: Tuesday, August 27, 2024 10:31 PM
To: NRS-KRS Project; mayorandcouncil@santaclaraca.gov; info@siliconvalleypower.com; planningcommission@santaclaraca.gov; manager@santaclaraca.gov; AJackman@santaclaraca.gov
Subject: Concerns Regarding Upcoming High Power Electric Wire Poles in Our Community for the upcoming SVP project connecting the Northern Receiving Station NRS to Kifer receiving station (KRS)- NRS-KRS 115kV Transmission Line Project

To Whomsoever it may concern,

We are residents of Santa Clara that will be negatively impacted by the "NRS-KRS 115kV Transmission Line Project". We have collectively reviewed the draft Initial Study/ Mitigated Negative declaration for "NRS-KRS 115kV Transmission Line Project" from July 2024. After reviewing this report and also attending the virtual and in person meetings, here are some references to emphasize our various concerns.

Reference #1 : CEQA's reporting includes these State reviewing agencies: California Air Resources Board (ARB), California Department of Fish and Wildlife, Bay Delta Region 3 (CDFW), California Department of Forestry and Fire Protection (CAL FIRE), California Department of Parks and Recreation, California Department of Toxic Substances Control (DTSC), California Department of Transportation, District 4 (DOT), California Department of Transportation, Division of Aeronautics (DOT), California Department of Transportation, Division of Transportation Planning (DOT), California Department of Water Resources (DWR), California Energy Commission, California Highway Patrol (CHP), California Native American Heritage Commission (NAHC), California Natural Resources Agency, California Public Utilities Commission (CPUC), California Regional Water Quality Control Board, San Francisco Bay Region 2 (RWQCB), Office of Historic Preservation, State Water Resources Control Board, Division of Drinking Water.

Personal observation#1 : *None of these agencies has any association with human health. CEQA reporting is not qualified enough to force the public to compromise on health concerns. Other agencies need to be involved to review this proposal, that are qualified to study the effect on " humans", not just wildlife and vegetation, or " environment. The checklist is completely devoid of our gravest humanitarian concerns. It is quite shocking that the project has not included any study to understand the potential impact of EMF waves on human lives, given that the transmission lines are potentially less than 60 feet from the closest dwellings. The city of Santa Clara needs to step in and have third party/ independent studies completed in favor of human health.*

Reference #2: Page 41 of report- Section 4.15. Electric and Magnetic Fields summary.

Personal observation#2 : *This consideration was completely absent earlier. Only after the residents raised their voices, this section was added. To our greatest disappointment, this section is copied over from an older report on the "South Loop Reconfiguration Project" from 2020. One would have expected that a new study would have been conducted for a project this size. The lack of due diligence and ignorance towards the specifics of this project are apparent and not acceptable. In fact we have found several sections of this older report as being reused across the entire report.*

The EMP map shared during the in person meeting had several flaws and we would like to question the viability of the study that was completed. What time of the day was the study completed and on what models were the values based on since these were done on assumption for the EMF values that would be there once the project is complete. Since we have seen the several sections of the report redundantly copied over from other reports, we would like a more detailed analysis of this report.

Regarding EMF concerns for human health, there are plenty of scientific studies that do indicate the grave concern on human health with EMF exposures and we cannot ignore this aspect. Here is a reference to an article and there are plenty of articles listed here under references:

https://psc.wi.gov/Documents/Brochures/EMF.pdf

There are not enough references listed in the draft report provided to us, and the explanation provided seems to be conveniently using studies that prove otherwise. This needs more investigation and references. The solution provided as raising the height of the poles and increasing the distance is non-existent. It was confirmed during the in person meeting that the design will not be altered and the height was already designed as required according to the SVP team present there. It seems that the preparers of this report did not even read the report after copying pasting from the old report as evident in the list of proposed solutions is not applicable here.

The live presentation on August 22nd showed the comparison of EMF values of household objects as a means to show that everyday household items carry a similar range of mG(milli Gauss) units. This comparison was inherently flawed since it mentioned that the household devices were producing those level at 1 feet while those indicated for 115KVf lines were at 60 feet. further these household devices do not operate 24X7 similar to the transmission lines.

There were a lot of citations of reports showcasing that no clear proof of EMF to human health exists but we would like to also point out certain states like Connecticut Department of Public Health have cited reports that have shown an increased incidence of childhood leukemia(Blood cancer) at avg exposure of only 3 mG. Also they have called out that some utility workers exposed to high levels of emf have increase risks of Lur Gehrig's disease.

They also call out that most impacts of EMF from high voltage lines dissipate at ~300 feet.

These are available on Page 2 & Page 3 of this report: https://portal.ct.gov/-/media/departments-and-agencies/dph/dph/environmental_health/eoha/pdf/emffactsheet2008pdf.pdf

This report has citations from WHO , National Institute of Environmental Health Sciences and California Department of Health Services.

https://www.niehs.nih.gov/sites/default/files/health/materials/electric_and_magnetic_fields_associated_with_the_use_of_electric_power_questions_and_answers_english_508.pdf

Reference #3

Page 174- Section 5.21- Corona and induced current effect:

Personal observation#3

The railway line's proximity to the proposed high transmission lines is very concerning. The centerline distance from proposed lines to railway line is aproximately 50 feet per google maps with some margin for error. As per the report there are no Corona rings proposed for the 115KV lines. There seems to be negligence in design in consideration of the hazards posed by these high voltage lines as Corona effect can transfer current to railway lines. All the residents are at a high risk of accidental hazards given the proximity of the railway line, this project is adding on to the hazards. This section is only stating information about what Corona effect is, as may be required by law, which by the way is again a copy paste from an old report. The only concern discussed in more depth is the audible noise level. The concerns are presented to imply that this is not significant by stating that 115KV lines pose less than significant risk**.**

Reference #4: Post meeting material from March 19th 2024
@https://santaclara.legistar.com/LegislationDetail.aspx?ID=6582415&GUID=E6E14646-3CF7-4D15-BB98-F18580696012&Options=&Search=

Personal observation#4: At surface level, it looks like Option #A was selected only based on Cost perspective, without any consideration to human health, young children, property values, Corona effect, long term sustainability perspective or any other factors. While its important to understand the results of CEQA study, its extremely critical to understand the negative impact of EMF on the many young children living around the proposed transmission lines. Without extensive research and study on the impact to young children and adult heath, we should not be approving such an incomplete proposal.

Page 6 of this document stated that the preferred route A cost of construction is $9.5 million. In discussions with several real estate agents in the region, I have unanimously found all to agree that the real estate values of residences in close proximity to power lines goes down. Its hard to find potential buyers and most folks refrain from buying a house too close to high power transmission lines. There are 1000 plus residences in the area affected by this project. Even if we were to make very rough assumptions, and assume minimal cost reduction in property values and take an average loss of $100,000 per property in the current year, that goes to $100,000,000 of loss of equity to the public. This is not even accounting the businesses affected by this project. This long explanation was to raise a point that if the selection of route A was saving money to the city, this is costing a huge financial loss to the public, which is not acceptable. This decrease in property values will also directly impact the tax collection by the Santa Clara Assessor and result in lower tax revenue coming into the city of Santa Clara.

Reference #5 : Page 49 of report- Figure 5.1-2. Wall separating residences and Lafayette Street.

Personal observation#5: *The picture is taken conveniently from the other side of the railway line which is actually Kingsbury street, inside a private community and not Lafayette street. This is further away from the proposed SVP lines. This is very misleading; see snapshots taken from Google maps below*

And this is what is included on the report:

NRS-KRS 115kV Transmission Line Project 5.1. Aesthetics

Figure 5.1-2. Wall Separating Residences and Lafayette Street

Figure 5.1-2

Wall Separating Residences and Lafayette Street

July 2024 5.1-5 Administrative Draft MND/IS

The Mission Garden Townhome community has no walls as such and the main entry to residences face the road directly and are the most impacted. There are several other single family homes on Lafayette street with the same impact, having an entryway directly on the street. This and including other citations of reusing sections of older reports, is all in all absolutely unacceptable and instills distrust. This further shows incompetency of the agency/ agencies preparing this report.

Conclusion: *This project's initial study needs to expand beyond CEQA for approval from the public. The limited scope of CEQA has failed to address the following concerns we have:*

- *Health hazards due to EMF levels.- This is by far the gravest concern and CEQA is clearly not qualified to study that.*
- *Reduced property values- several references provided below.*
- *Loss of Aesthetic appeal for potential real estate buyers/ new and current businesses.*
- *Increase in audible noise levels during and post construction, which is already high in the area with presence of railway line and air traffic route.*
- *Increased fire hazard/ risk of other accidents.*
- *Induced current on railway lines with close proximity/ corona effect- CEQA report did not clearly address this for a 115KV line.*
- *Economic effect on the community from small to larger scale based on all of the above.*

*We demand further investigation and revisit other routes or proposals to resolve the power needs of the city. We have to ensure our and our kids' health is not at stake in the name of development and infrastructure and are not in agreement for this project to move forward**. We cannot approve this to move forward as of now given the lack of study and absence of a satisfactory solution/ mitigation provided in favor/ assurance to public health.***

Additional References:

Research on effects of EMF on humans:

1. ***https://www.ncbi.nlm.nih.gov/pmc/articles/PMC6025786/***

This research reinforces the concerns of EMF exposure effect on human health.

2. ***https://www.epa.gov/radtown/electric-and-magnetic-fields-power-lines***

This resource suggests taking precautions and keeping distance or limiting exposure. Residents would no longer have either of these two options per the current proposals if they are living there 24-7.

What You Can Do

If you are concerned about possible health risks from electric and magnetic fields, you can:

- **Increase the distance between yourself and the source.** The greater the distance between you and the source of EMF, the lower your exposure.
- **Limit the time spent around the source.** The less time you spend near EMF, the lower your exposure.

3. ***https://www.fastexpert.com/blog/should-i-buy-a-house-near-power-lines/***

These are points of view from a real estate expert who clearly states that property value declines proportionately to the distance of the property from high tension lines. People have apprehensions whether or not research clearly defines the risk. Potential buyers might have low priority for a property too close to a high tension power line.

4. ***https://orchard.com/blog/posts/power-lines-and-property-value***

Another research on real estate values lowered due to high tension power lines proximity.

Email: NRS-KRS 115 kV T-Line

From: Ruchika Sarna <ruchikasarna@gmail.com>
Sent: Wednesday, August 28, 2024 12:32 AM
To: NRS-KRS Project <NRS-KRS@aspeneg.com>; mayorandcouncil@santaclaraca.gov <mayorandcouncil@santaclaraca.gov>; info@siliconvalleypower.com <info@siliconvalleypower.com>; planningcommission@santaclaraca.gov <planningcommission@santaclaraca.gov>; manager@santaclaraca.gov <manager@santaclaraca.gov>; AJackman@santaclaraca.gov <AJackman@santaclaraca.gov>
Subject: Concerns Regarding Upcoming High Power Electric Wire Poles in Our Community for the upcoming SVP project connecting the Northern Receiving Station NRS to Kifer receiving station (KRS)- NRS-KRS 115kV Transmission Line Project

To Whomsoever it may concern,

We are residents of Santa Clara that will be negatively impacted by the "NRS-KRS 115kV Transmission Line Project". We have collectively reviewed the draft Initial Study/ Mitigated Negative declaration for "NRS-KRS 115kV Transmission Line Project" from July 2024. After reviewing this report and also attending the virtual and in person meetings, here are some references to emphasize our various concerns.

Reference #1 : CEQA's reporting includes these State reviewing agencies: California Air Resources Board (ARB), California Department of Fish and Wildlife, Bay Delta Region 3 (CDFW), California Department of Forestry and Fire Protection (CAL FIRE), California Department of Parks and Recreation, California Department of Toxic Substances Control (DTSC), California Department of Transportation, District 4 (DOT), California Department of Transportation, Division of Aeronautics (DOT), California Department of Transportation, Division of Transportation Planning (DOT), California Department of Water Resources (DWR), California Energy Commission, California Highway Patrol (CHP), California Native American Heritage Commission (NAHC), California Natural Resources Agency, California Public Utilities Commission (CPUC), California Regional Water Quality Control Board, San Francisco Bay Region 2 (RWQCB), Office of Historic Preservation, State Water Resources Control Board, Division of Drinking Water.

Personal observation#1 : *None of these agencies has any association with human health. CEQA reporting is not qualified enough to force the public to compromise on health concerns. Other agencies need to be involved to review this proposal, that are qualified to study the effect on " humans", not just wildlife and vegetation, or " environment. The checklist is completely devoid of our gravest humanitarian concerns. It is quite shocking that the project has not included any study to understand the potential impact of EMF waves on human lives, given that the transmission lines are potentially less than 60 feet from the closest dwellings. The city of Santa Clara needs to step in and have third party/ independent studies completed in favor of human health.*

Reference #2: Page 41 of report- Section 4.15. Electric and Magnetic Fields summary.

Personal observation#2 : *This consideration was completely absent earlier. Only after the residents raised their voices, this section was added. To our greatest disappointment, this section is copied over from an older report on the "South Loop Reconfiguration Project" from 2020. One would have expected that a new study would have been conducted for a project this size. The lack of due diligence and ignorance towards the specifics of this project are apparent and not acceptable. In fact we have found several sections of this older report as being reused across the entire report.*

The EMP map shared during the in person meeting had several flaws and we would like to question the viability of the study that was completed. What time of the day was the study completed and on what

models were the values based on since these were done on assumption for the EMF values that would be there once the project is complete. Since we have seen the several sections of the report redundantly copied over from other reports, we would like a more detailed analysis of this report.

Regarding EMF concerns for human health, there are plenty of scientific studies that do indicate the grave concern on human health with EMF exposures and we cannot ignore this aspect. Here is a reference to an article and there are plenty of articles listed here under references:

https://psc.wi.gov/Documents/Brochures/EMF.pdf

There are not enough references listed in the draft report provided to us, and the explanation provided seems to be conveniently using studies that prove otherwise. This needs more investigation and references. The solution provided as raising the height of the poles and increasing the distance is non-existent. It was confirmed during the in person meeting that the design will not be altered and the height was already designed as required according to the SVP team present there. It seems that the preparers of this report did not even read the report after copying pasting from the old report as evident in the list of proposed solutions is not applicable here.

The live presentation on August 22nd showed the comparison of EMF values of household objects as a means to show that everyday household items carry a similar range of mG(milli Gauss) units. This comparison was inherently flawed since it mentioned that the household devices were producing those level at 1 feet while those indicated for 115KVf lines were at 60 feet. further these household devices do not operate 24X7 similar to the transmission lines.

There were a lot of citations of reports showcasing that no clear proof of EMF to human health exists but we would like to also point out certain states like Connecticut Department of Public Health have cited reports that have shown an increased incidence of childhood leukemia(Blood cancer) at avg exposure of only 3 mG. Also they have called out that some utility workers exposed to high levels of emf have increase risks of Lur Gehrig's disease.

They also call out that most impacts of EMF from high voltage lines dissipate at ~300 feet.

These are available on Page 2 & Page 3 of this report: https://portal.ct.gov/-/media/departments-and-agencies/dph/dph/environmental_health/eoha/pdf/emffactsheet2008pdf.pdf

This report has citations from WHO , National Institute of Environmental Health Sciences and California Department of Health Services.

https://www.niehs.nih.gov/sites/default/files/health/materials/electric_and_magnetic_fields_associated_with_the_use_of_electric_power_questions_and_answers_english_508.pdf

Reference #3

Page 174- Section 5.21- Corona and induced current effect:

Personal observation#3

The railway line's proximity to the proposed high transmission lines is very concerning. The centerline distance from proposed lines to railway line is aproximately 50 feet per google maps with some margin for error. As per the report there are no Corona rings proposed for the 115KV lines. There seems to be negligence in design in consideration of the hazards posed by these high voltage lines as Corona effect can transfer current to railway lines. All the residents are at a high risk of accidental hazards given the proximity of the railway line, this project is adding on to the hazards. This section is only stating information about what Corona effect is, as may be required by law, which by the way is again a copy paste from an old report. The only concern discussed in more depth is the audible noise level. The

concerns are presented to imply that this is not significant by stating that 115KV lines pose less than significant risk**.**

Reference #4: Post meeting material from March 19th 2024
@https://santaclara.legistar.com/LegislationDetail.aspx?ID=6582415&GUID=E6E14646-3CF7-4D15-BB98-F18580696012&Options=&Search=

Personal observation#4: At surface level, it looks like Option #A was selected only based on Cost perspective, without any consideration to human health, young children, property values, Corona effect, long term sustainability perspective or any other factors. While its important to understand the results of CEQA study, its extremely critical to understand the negative impact of EMF on the many young children living around the proposed transmission lines. Without extensive research and study on the impact to young children and adult heath, we should not be approving such an incomplete proposal.

Page 6 of this document stated that the preferred route A cost of construction is $9.5 million. In discussions with several real estate agents in the region, I have unanimously found all to agree that the real estate values of residences in close proximity to power lines goes down. Its hard to find potential buyers and most folks refrain from buying a house too close to high power transmission lines. There are 1000 plus residences in the area affected by this project. Even if we were to make very rough assumptions, and assume minimal cost reduction in property values and take an average loss of $100,000 per property in the current year, that goes to $100,000,000 of loss of equity to the public. This is not even accounting the businesses affected by this project. This long explanation was to raise a point that if the selection of route A was saving money to the city, this is costing a huge financial loss to the public, which is not acceptable. This decrease in property values will also directly impact the tax collection by the Santa Clara Assessor and result in lower tax revenue coming into the city of Santa Clara.

Reference #5 : Page 49 of report- Figure 5.1-2. Wall separating residences and Lafayette Street.

Personal observation#5: *The picture is taken conveniently from the other side of the railway line which is actually Kingsbury street, inside a private community and not Lafayette street. This is further away from the proposed SVP lines. This is very misleading; see snapshots taken from Google maps below*

<u>And this is what is included on the report:</u>

NRS-KRS 115kV Transmission Line Project 5.1. Aesthetics

Figure 5.1-2. Wall Separating Residences and Lafayette Street

Figure 5.1-2
Wall Separating Residences and Lafayette Street

July 2024 5.1-5 Administrative Draft MND/IS

The Mission Garden Townhome community has no walls as such and the main entry to residences face the road directly and are the most impacted. There are several other single family homes on Lafayette street with the same impact, having an entryway directly on the street. This and including other citations of reusing sections of older reports, is all in all absolutely unacceptable and instills distrust. This further shows incompetency of the agency/ agencies preparing this report.

Conclusion: *This project's initial study needs to expand beyond CEQA for approval from the public. The limited scope of CEQA has failed to address the following concerns we have:*

- *Health hazards due to EMF levels.- This is by far the gravest concern and CEQA is clearly not qualified to study that.*
- *Reduced property values- several references provided below.*
- *Loss of Aesthetic appeal for potential real estate buyers/ new and current businesses.*
- *Increase in audible noise levels during and post construction, which is already high in the area with presence of railway line and air traffic route.*
- *Increased fire hazard/ risk of other accidents.*
- *Induced current on railway lines with close proximity/ corona effect- CEQA report did not clearly address this for a 115KV line.*
- *Economic effect on the community from small to larger scale based on all of the above.*

*We demand further investigation and revisit other routes or proposals to resolve the power needs of the city. We have to ensure our and our kids' health is not at stake in the name of development and infrastructure and are not in agreement for this project to move forward**. We cannot approve this to move forward as of now given the lack of study and absence of a satisfactory solution/ mitigation provided in favor/ assurance to public health.***

Additional References:

Research on effects of EMF on humans:

1. ***https://www.ncbi.nlm.nih.gov/pmc/articles/PMC6025786/***

This research reinforces the concerns of EMF exposure effect on human health.

2. ***https://www.epa.gov/radtown/electric-and-magnetic-fields-power-lines***

This resource suggests taking precautions and keeping distance or limiting exposure. Residents would no longer have either of these two options per the current proposals if they are living there 24-7.

What You Can Do

If you are concerned about possible health risks from electric and magnetic fields, you can:

- **Increase the distance between yourself and the source.** The greater the distance between you and the source of EMF, the lower your exposure.
- **Limit the time spent around the source.** The less time you spend near EMF, the lower your exposure.

3. ***https://www.fastexpert.com/blog/should-i-buy-a-house-near-power-lines/***

These are points of view from a real estate expert who clearly states that property value declines proportionately to the distance of the property from high tension lines. People have apprehensions whether or not research clearly defines the risk. Potential buyers might have low priority for a property too close to a high tension power line.

4. ***https://orchard.com/blog/posts/power-lines-and-property-value***

Another research on real estate values lowered due to high tension power lines proximity.

Email: NRS-KRS 115 kV T-Line

From: Yuri Kleban π <yurikleban@google.com>
Sent: Tuesday, August 27, 2024 8:20 PM
To: NRS-KRS Project; mayorandcouncil@santaclaraca.gov; info@siliconvalleypower.com; planningcommission@santaclaraca.gov; manager@santaclaraca.gov; Allie Jackman
Subject: Concerns Regarding Upcoming High Power Electric Wire Poles in Our Community for the upcoming SVP project connecting the Northern Receiving Station NRS to Kifer receiving station (KRS)- NRS-KRS 115kV Transmission Line Project

To Whomsoever it may concern,

We are residents of Santa Clara that will be negatively impacted by the "NRS-KRS 115kV Transmission Line Project". We have collectively reviewed the draft Initial Study/ Mitigated Negative declaration for "NRS-KRS 115kV Transmission Line Project" from July 2024. After reviewing this report and also attending the virtual and in person meetings, here are some references to emphasize our various concerns.

Reference #1 : CEQA's reporting includes these State reviewing agencies: California Air Resources Board (ARB), California Department of Fish and Wildlife, Bay Delta Region 3 (CDFW), California Department of Forestry and Fire Protection (CAL FIRE), California Department of Parks and Recreation, California Department of Toxic Substances Control (DTSC), California Department of Transportation, District 4 (DOT), California Department of Transportation, Division of Aeronautics (DOT), California Department of Transportation, Division of Transportation Planning (DOT), California Department of Water Resources (DWR), California Energy Commission, California Highway Patrol (CHP), California Native American Heritage Commission (NAHC), California Natural Resources Agency, California Public Utilities Commission (CPUC), California Regional Water Quality Control Board, San Francisco Bay Region 2 (RWQCB), Office of Historic Preservation, State Water Resources Control Board, Division of Drinking Water.

Personal observation#1 : *None of these agencies has any association with human health. CEQA reporting is not qualified enough to force the public to compromise on health concerns. Other agencies need to be involved to review this proposal, that are qualified to study the effect on " humans", not just wildlife and vegetation, or " environment. The checklist is completely devoid of our gravest humanitarian concerns. It is quite shocking that the project has not included any study to understand the potential impact of EMF waves on human lives, given that the transmission lines are potentially less than 60 feet from the closest dwellings. The city of Santa Clara needs to step in and have third party/ independent studies completed in favor of human health.*

Reference #2: Page 41 of report- Section 4.15. Electric and Magnetic Fields summary.

Personal observation#2 : *This consideration was completely absent earlier. Only after the residents raised their voices, this section was added. To our greatest disappointment, this section is copied over from an older report on the "South Loop Reconfiguration Project" from 2020. One would have expected that a new study would have been conducted for a project this size. The lack of due diligence and ignorance towards the specifics of this project are apparent and not acceptable. In fact we have found several sections of this older report as being reused across the entire report.*

The EMP map shared during the in person meeting had several flaws and we would like to question the viability of the study that was completed. What time of the day was the study completed and on what models were the values based on since these were done on assumption for the EMF values that would be there once the project is complete. Since we have seen the several sections of the report redundantly copied over from other reports, we would like a more detailed analysis of this report.

Regarding EMF concerns for human health, there are plenty of scientific studies that do indicate the grave concern on human health with EMF exposures and we cannot ignore this aspect. Here is a reference to an article and there are plenty of articles listed here under references:

https://psc.wi.gov/Documents/Brochures/EMF.pdf

There are not enough references listed in the draft report provided to us, and the explanation provided seems to be conveniently using studies that prove otherwise. This needs more investigation and references. The solution provided as raising the height of the poles and increasing the distance is non-existent. It was confirmed during the in person meeting that the design will not be altered and the height was already designed as required according to the SVP team present there. It seems that the preparers of this report did not even read the report after copying pasting from the old report as evident in the list of proposed solutions is not applicable here.

The live presentation on August 22nd showed the comparison of EMF values of household objects as a means to show that everyday household items carry a similar range of mG(milli Gauss) units. This comparison was inherently flawed since it mentioned that the household devices were producing those level at 1 feet while those indicated for 115KVf lines were at 60 feet. further these household devices do not operate 24X7 similar to the transmission lines.

There were a lot of citations of reports showcasing that no clear proof of EMF to human health exists but we would like to also point out certain states like Connecticut Department of Public Health have cited reports that have shown an increased incidence of childhood leukemia(Blood cancer) at avg exposure of only 3 mG. Also they have called out that some utility workers exposed to high levels of emf have increase risks of Lur Gehrig's disease.

They also call out that most impacts of EMF from high voltage lines dissipate at ~300 feet.

These are available on Page 2 & Page 3 of this report: https://portal.ct.gov/-/media/departments-and-agencies/dph/dph/environmental_health/eoha/pdf/emffactsheet2008pdf.pdf

This report has citations from WHO , National Institute of Environmental Health Sciences and California Department of Health Services.

https://www.niehs.nih.gov/sites/default/files/health/materials/electric_and_magnetic_fields_associated_with_the_use_of_electric_power_questions_and_answers_english_508.pdf

Reference #3

Page 174- Section 5.21- Corona and induced current effect:

Personal observation#3

The railway line's proximity to the proposed high transmission lines is very concerning. The centerline distance from proposed lines to railway line is aproximately 50 feet per google maps with some margin for error. As per the report there are no Corona rings proposed for the 115KV lines. There seems to be negligence in design in consideration of the hazards posed by these high voltage lines as Corona effect can transfer current to railway lines. All the residents are at a high risk of accidental hazards given the proximity of the railway line, this project is adding on to the hazards. This section is only stating information about what Corona effect is, as may be required by law, which by the way is again a copy paste from an old report. The only concern discussed in more depth is the audible noise level. The concerns are presented to imply that this is not significant by stating that 115KV lines pose less than significant risk**.**

Reference #4: Post meeting material from March 19th 2024
@https://santaclara.legistar.com/LegislationDetail.aspx?ID=6582415&GUID=E6E14646-3CF7-4D15-BB98-F18580696012&Options=&Search=

Personal observation#4: At surface level, it looks like Option #A was selected only based on Cost perspective, without any consideration to human health, young children, property values, Corona effect, long term sustainability perspective or any other factors. While its important to understand the results of CEQA study, its extremely critical to understand the negative impact of EMF on the many young children living around the proposed transmission lines. Without extensive research and study on the impact to young children and adult heath, we should not be approving such an incomplete proposal.

Page 6 of this document stated that the preferred route A cost of construction is $9.5 million. In discussions with several real estate agents in the region, I have unanimously found all to agree that the real estate values of residences in close proximity to power lines goes down. Its hard to find potential buyers and most folks refrain from buying a house too close to high power transmission lines. There are 1000 plus residences in the area affected by this project. Even if we were to make very rough assumptions, and assume minimal cost reduction in property values and take an average loss of $100,000 per property in the current year, that goes to $100,000,000 of loss of equity to the public. This is not even accounting the businesses affected by this project. This long explanation was to raise a point that if the selection of route A was saving money to the city, this is costing a huge financial loss to the public, which is not acceptable. This decrease in property values will also directly impact the tax collection by the Santa Clara Assessor and result in lower tax revenue coming into the city of Santa Clara.

Reference #5 : Page 49 of report- Figure 5.1-2. Wall separating residences and Lafayette Street.

Personal observation#5: *The picture is taken conveniently from the other side of the railway line which is actually Kingsbury street, inside a private community and not Lafayette street. This is further away from the proposed SVP lines. This is very misleading; see snapshots taken from Google maps below*

And this is what is included on the report:

NRS-KRS 115kV Transmission Line Project 5.1. Aesthetics

Figure 5.1-2. Wall Separating Residences and Lafayette Street

Figure 5.1-2

Wall Separating Residences and Lafayette Street

July 2024 5.1-5 Administrative Draft MND/IS

The Mission Garden Townhome community has no walls as such and the main entry to residences face the road directly and are the most impacted. There are several other single family homes on Lafayette street with the same impact, having an entryway directly on the street. This and including other citations

of reusing sections of older reports, is all in all absolutely unacceptable and instills distrust. This further shows incompetency of the agency/ agencies preparing this report.

Conclusion: *This project's initial study needs to expand beyond CEQA for approval from the public. The limited scope of CEQA has failed to address the following concerns we have:*

- *Health hazards due to EMF levels.- This is by far the gravest concern and CEQA is clearly not qualified to study that.*
- *Reduced property values- several references provided below.*
- *Loss of Aesthetic appeal for potential real estate buyers/ new and current businesses.*
- *Increase in audible noise levels during and post construction, which is already high in the area with presence of railway line and air traffic route.*
- *Increased fire hazard/ risk of other accidents.*
- *Induced current on railway lines with close proximity/ corona effect- CEQA report did not clearly address this for a 115KV line.*
- *Economic effect on the community from small to larger scale based on all of the above.*

*We demand further investigation and revisit other routes or proposals to resolve the power needs of the city. We have to ensure our and our kids' health is not at stake in the name of development and infrastructure and are not in agreement for this project to move forward**. We cannot approve this to move forward as of now given the lack of study and absence of a satisfactory solution/ mitigation provided in favor/ assurance to public health.***

Additional References:

Research on effects of EMF on humans:

1. ***https://www.ncbi.nlm.nih.gov/pmc/articles/PMC6025786/***

This research reinforces the concerns of EMF exposure effect on human health.

2. ***https://www.epa.gov/radtown/electric-and-magnetic-fields-power-lines***

This resource suggests taking precautions and keeping distance or limiting exposure. Residents would no longer have either of these two options per the current proposals if they are living there 24-7.

What You Can Do

If you are concerned about possible health risks from electric and magnetic fields, you can:

- **Increase the distance between yourself and the source.** The greater the distance between you and the source of EMF, the lower your exposure.
- **Limit the time spent around the source.** The less time you spend near EMF, the lower your exposure.

3. ***https://www.fastexpert.com/blog/should-i-buy-a-house-near-power-lines/***

These are points of view from a real estate expert who clearly states that property value declines proportionately to the distance of the property from high tension lines. People have apprehensions whether or not research clearly defines the risk. Potential buyers might have low priority for a property too close to a high tension power line.

4. ***https://orchard.com/blog/posts/power-lines-and-property-value***

Another research on real estate values lowered due to high tension power lines proximity.

Yuri Kleban | Global Partnerships Tools - Global Product Lead Manager | Google |

I am part of the g2g coaching program in Google. Sign up at go/coachyuri

This email may be confidential or privileged. If you received this communication by mistake, please don't forward it to anyone else, please erase all copies and attachments, and please let me know that it went to the wrong person.

Email: NRS-KRS 115 kV T-Line

From: *Sir*Yuri <siryuri@gmail.com>
Sent: Tuesday, August 27, 2024 8:22 PM
To: NRS-KRS Project; mayorandcouncil@santaclaraca.gov; info@siliconvalleypower.com; planningcommission@santaclaraca.gov; manager@santaclaraca.gov; AJackman@santaclaraca.gov
Subject: Concerns Regarding Upcoming High Power Electric Wire Poles in Our Community - NRS-KRS 115kV Transmission Line Project

Hi there,

As residents of Santa Clara, we are deeply concerned about the potential negative impacts of the "NRS-KRS 115kV Transmission Line Project." After thoroughly reviewing the draft Initial Study/Mitigated Negative Declaration (July 2024) and participating in related meetings, we have identified several critical issues that require attention.

Health Concerns: The California Environmental Quality Act (CEQA) review lacks focus on human health impacts, particularly concerning electromagnetic fields (EMF). Despite proximity to residences (less than 60 feet), there has been no comprehensive study on the potential health effects of EMF exposure. We urge the City of Santa Clara to commission independent studies that prioritize public health.

Inadequate Reporting: The inclusion of an Electric and Magnetic Fields (EMF) section in the report seems to have been an afterthought, prompted by resident concerns. This section largely replicates content from a 2020 report, lacking specific analysis relevant to this project. Additionally, the EMF study presented is flawed and does not provide a realistic assessment of potential risks.

Corona Effect and Railway Line Proximity: The report neglects the risks associated with the Corona effect and its potential impact on nearby railway lines. With the proposed transmission lines only 50 feet from the railway, this oversight poses a significant safety hazard.

Economic and Property Value Implications: The selection of Route A appears driven by cost-saving measures, with little regard for the potential $100 million loss in property value for residents in the affected area. This decision could also reduce tax revenues for the city.

Misleading Information: Certain report sections, such as the representation of residential impact, are misleading. The report’s reliance on outdated data further erodes trust in its findings.

In conclusion, the scope of the CEQA review is insufficient to address our concerns. We demand further investigation, particularly into the health and economic impacts, before this project proceeds. The well-being of our community should not be compromised in the name of development.

-Y & A, residents

Email: NRS-KRS 115 kV T-Line

From: derek fong <dfong87@gmail.com>
Sent: Tuesday, August 27, 2024 4:28 PM
To: NRS-KRS Project
Subject: feedback on slides from feedback meeting

hi Allie,

i wasn't able to attend the meeting, but i did review the slides (without Appendix G being available) and quite frankly, i don't find the analysis and comparison of household appliances vs the expected load of the segments very convincing as rational to construct the project as proposed. in fact, i find the analysis/arguments misleading for several reasons:

- some residents are roughly ~60 ft from the centerline of the Lafayette stretch
- the normal and peak loads greatly exceed the median value of many of the household appliances listed (who uses Electric can openers anyway?)
- and most importantly, most of those appliances listed are not emitted EMF constantly to the homeowner. they only emit when operated (in short bursts) which is nothing like the 24/7 operated e transmission lines.

i hope, even if costly, Silicon Valley Power will reconsider the more costly and inconvenient option of undergrounding the line. white there are no regulations or agreement on "safe" EMF levels, as a scientist, i well know there is enough evidence in the peer reviewed literature which suggests any added EMF fields are harmful and increase the risk of cancer.

as a SVP customer, i would gladly have slightly higher electricity rates than have the added risk of the calculated EMF fields which to me are significant and should be avoided.

thanks for taking time time to hear my concerns. i hope the powers that be will take the concerns and voices of nearby residences seriously. don't hesitate to contact me if you have any questions about what i've written above.

Sincerely,
Derek Fong

Email: NRS-KRS 115 kV T-Line

From: jeff.holmbeck <jeff.holmbeck@sbcglobal.net>
Sent: Saturday, August 24, 2024 3:11 AM
To: NRS-KRS Project; Silicon Valley Power
Cc: Allie Jackman
Subject: Re: Join Us for a Community Meeting to Discuss SVP's New Transmission Line Project

Thank you Grace and I appreciate the response.

Regards,
Jeff

Sent from my Verizon, Samsung Galaxy smartphone

-------- Original message --------
From: NRS-KRS Project <NRS-KRS@aspeneg.com>
Date: 8/23/24 8:05 PM (GMT+01:00)
To: "jeff.holmbeck" <jeff.holmbeck@sbcglobal.net>, Silicon Valley Power <svp@info.santaclaraca.gov>
Cc: Allie Jackman <AJackman@SantaClaraCA.gov>
Subject: Re: Join Us for a Community Meeting to Discuss SVP's New Transmission Line Project

Hi Jeff,

Thanks for reaching out and expressing your preference on the Project. On Monday, we will upload the Public Engagement Meeting PowerPoint and FAQ to the SVP website (link below).

Projects | Silicon Valley Power

I am looking into the cost and will get back to you.

Thanks, and have a great weekend!
Grace

From: jeff.holmbeck <jeff.holmbeck@sbcglobal.net>
Sent: Monday, August 12, 2024 8:39 PM
To: Silicon Valley Power <svp@info.santaclaraca.gov>
Cc: NRS-KRS Project <NRS-KRS@aspeneg.com>
Subject: RE: Join Us for a Community Meeting to Discuss SVP's New Transmission Line Project

I can't attend the meeting, bur would like to know how much Santa Clara taxpayer $'s was spent on the environmental study?

My vote would be to put it underground.

Jeff

Sent from my Verizon, Samsung Galaxy smartphone

-------- Original message --------
From: Silicon Valley Power <svp@info.santaclaraca.gov>
Date: 8/12/24 5:42 PM (GMT+01:00)
To: jeff.holmbeck@sbcglobal.net
Subject: Join Us for a Community Meeting to Discuss SVP's New Transmission Line Project

View as a webpage / Share

Join Us for a Community Meeting to Discuss SVP's New Transmission Line Project

Silicon Valley Power (SVP) is proposing to construct 2.24 miles of new 115 kV transmission line connecting the Northern Receiving Station (NRS) and Kifer Receiving Station (KRS). This project aims to balance and redistribute energy and support load growth.

An Initial Study was completed by Aspen Environmental Group on behalf of SVP, in accordance with the California Environmental Quality Act (CEQA), and is available for review in the Planning Division office in City Hall at 1500 Warburton Avenue, the Northside Branch Library at 695 Moreland Way, and online at: SiliconValleyPower.com/115kv. Based on the Initial Study, since the project involves constructing a new 2.24-mile-long overhead

and/or underground 115 kV transmission line between the Northern Receiving Station (NRS) and Kifer Receiving Station (KRS) to enhance SVP's system capacity and reliability, the project is not expected to have a significant environmental impact. This is due to the incorporation of mitigation measures through conditions of approval, which will reduce potential impacts to a less-than-significant level.

To help the affected community understand the Initial Study and to explain how the public can participate in SVP's decision-making process, SVP will hold an in-person community meeting.

Meeting Details

Date: Thursday, August 22, 2024
Time: 5:00 pm - 6:30 pm
Location: Northside Community Room, 695 Moreland Way, Santa Clara, CA 95054

Public Engagement

A Draft Initial Study/Mitigated Negative Declaration (IS/MND) was published on July 31, 2024. The 30-day public review period ends at 5:00 PM on August 30, 2024. We encourage residents to attend the community meeting in person. However, comments can also be submitted via US Mail or email to Allie Jackman (contact info below) by the deadline.

Contact Information

Allie Jackman, Silicon Valley Power
c/o Aspen Environmental Group
235 Montgomery Street, Suite 967
San Francisco, CA 94104-3002
Email: NRS-KRS@aspeneg.com
Project website: SiliconValleyPower.com/115kv

We look forward to your participation.

STAY CONNECTED

SUBSCRIBER SERVICES:
Manage Subscriptions | Unsubscribe All | Help

This email was sent to jeff.holmbeck@sbcglobal.net using GovDelivery Communications Cloud on behalf of: City of Santa Clara · 1500 Warburton Avenue · Santa Clara, CA 95050

GOVDELIVERY